NSK

BEARING AND LINEAR REPLACEMENT GUIDE

SUBSCRIBE TO NSK NEWSLETTER

CONTENTS

INTRODUCTION

The NSK Brand A-1
Terminology A-2
Bearing Types and Performance A-3
Precision Class A-4
Bearing Identification A-5
How to Order Replacement Bearings A-9

BALL BEARINGS

Single Row Deep Groove Ball Bearings

Nomenclature B-1
Interchange B-2
Applications B-2
Features B-3
Internal Clearance B-4
Snap Ring and Groove Dimensions B-5
Bearing Tables B-7

Double Row Angular Contact Ball Bearings

Nomenclature B-23
Interchange B-24
Applications B-24
Bearing Tables B-25

Self-Aligning Ball Bearings

Nomenclature B-31
Applications B-31
Interchange B-32
Internal Clearance B-32
Bearing Tables B-33

Angular Contact Ball Bearings

Nomenclature B-37
Interchange B-38
Applications B-38
Bearing Tables B-39

CYLINDRICAL ROLLER BEARINGS

Nomenclature C-1
Applications C-1
Interchange C-2
Internal Clearance C-3
Bearing Tables C-5

SPHERICAL ROLLER BEARINGS

Spherical Roller Bearings

Nomenclature D-1
Interchange D-2
Applications D-2
Internal Clearance D-3
Bearing Tables D-5

Shaker Screen Bearings

Nomenclature D-39
Internal Clearance D-39
Interchange D-40
Bearing Tables D-41

TAPERED ROLLER BEARINGS

Metric Tapered Roller Bearings

Nomenclature E-1
Interchange E-2
Applications E-2
Bearing Tables E-3

Inch Tapered Roller Bearings

Nomenclature E-29
Interchange E-30
Applications E-30
Bearing Tables E-31

CONTENTS (CONT.)

THRUST BEARINGS

Ball Thrust Bearings

Nomenclature F-1
Interchange F-2
Applications F-2
Bearing Tables F-3

Spherical Roller Thrust Bearings

Nomenclature F-11
Interchange F-12
Applications F-12
Bearing Tables F-13

Tapered Roller Thrust Bearings

Nomenclature F-19
Applications F-19
Bearing Tables F-19

Cylindrical Roller Thrust Bearings

Nomenclature F-20
Applications F-20
Bearing Tables F-21

SPLIT PILLOW BLOCKS

Nomenclature G-1
Applications G-2
Accessories G-2
Bearing Tables G-3
Inch Adapter Sleeves G-29
Inch Lock Nuts and Washer G-32

SUPER PRECISION BEARINGS

Super Precision Angular Contact Ball Bearings

Nomenclature H-1
Interchange H-2

SUPER PRECISION BEARINGS (CONT.)

Super Precision Angular Contact Ball Bearings (cont.)

Applications H-2
Bearing Tables H-3

High Speed Super Precision Angular Contact Ball Bearings

Nomenclature H-15
Interchange H-16
Applications H-16
Recommended Grease Quantities H-18
Bearing Tables H-19

Super Precision Angular Contact Thrust Ball Bearings

Nomenclature H-39
Interchange H-40
Applications H-40
Bearing Tables H-41

Super Precision Cylindrical Roller Bearings

Nomenclature H-45
Interchange H-46
Applications H-46
Bearing Tables H-47

Ball Screw Support Bearings

TAC Series

Nomenclature H-53
Interchange H-54
Applications H-54
Major Dimensions H-55
Load Ratings H-56
Preloads H-57

BSBD Series

BSN Type H-59
BSF Type H-60
BSN-DT Series H-61
BSF-DT Series H-62

SUPER PRECISION BEARINGS (CONT.)

Precision Deep Groove Ball Bearings

Nomenclature H-63
Interchange H-63
Applications H-63
Bearing Tables H-64

LINEAR MOTION

Linear Guides

Applications I-1
Product Selection Tips I-2
Interchange I-3
Types I-5

NH Series
(Replacement for LH Series, Size 15-65)

Nomenclature I-7
AN, BN Models I-9
AL, BL Models I-11
EM, GM Models I-13

NS Series
(Replacement for LS Series)

Nomenclature 1-15
CL, AL Models I-17
JM, EM Models I-19

PU Series

Nomenclature I-21
TR, AR, AL, UR, BL Models I-23

PE Series

Nomenclature I-25
AR, TR, UR, BR Models I-27

LW Series

Nomenclature I-29
EL Model I-31

LINEAR MOTION (CONT.)

RA Series

Nomenclature I-33
AN, BN Models I-35
AL, BL Models I-37
EM, GM Models I-39

Assembly and Mounting I-41
Grease I-43
K1™ Maintenance-Free Lubrication System I-47
Unit Conversion I-52

Precision Ground Ball Screw

Nomenclature I-53
Specification Sheet for New Applications I-54

Compact FA Quickship Ball Screws

Features I-55
Availability I-56

Rolled Ball Screw

Nomenclature I-57
Product Classification I-58

Ball Screw Support Units

Nomenclature I-59
Categories I-60
Support Units for Light Load I-61
Support Units for Heavy Load I-61
Support Units for Light Load and Small Equipment I-62

Monocarrier™

Features I-63
Applications I-64

CONTENTS (CONT.)

LINEAR MOTION (CONT.)

MCM Series Monocarrier™

Nomenclature I-65

Applications I-65

Accuracy Grade and Limitations I-66

Standard Combinations of Stroke and Ball Screw Lead I-67

Basic Load Rating I-68

MCH Series Monocarrier™

Nomenclature I-69

Applications I-69

Accuracy Grade and Limitations I-70

Standard Combinations of Stroke and Ball Screw Lead I-71

Basic Load Rating I-72

ENGINEERING

Bearing Selection J-1

Bearing Tolerances J-5

Tolerances for Shaft Diameters J-19

Tolerances for Housing Bore Diameters J-21

Bearing Fits and Internal Clearance J-23

How to Select a Proper Fit J-24

Changes in Internal Radial Clearance J-28

Preloaded Bearings J-29

Lubricants J-32

Bearing Lubrication J-35

How to Handle Bearings J-42

Mounting – Factors to Consider J-42

Inspecting and Troubleshooting J-48

How to Dismount Bearings J-49

Cleaning, Inspection, Evaluation and Maintenance J-51

Bearing Failures J-52

Conversion Factors J-54

NOTES

NSK
NSK
JAPAN
NSK
HPS

INTRODUCTION

The NSK Brand A-1
Terminology A-2
Bearing Types and Performance A-3
Precision Class A-4
Bearing Identification A-5
How to Order Replacement Bearings A-9

THE NSK BRAND, RECOGNIZED AROUND THE WORLD

From home appliances, automobiles, and capital equipment to the aerospace industry – NSK bearings are used in an extensive range of applications. NSK established its global-scale enterprise on technology that has met the exact requirements of global industry. We have also established R&D systems and support services to meet the diverse needs of our customers on every continent.

As a brand recognized around the world, NSK continues to lead industry with its technical expertise.

NSK IS ON THE MOVE, ACROSS THE GLOBE

Headquarters

America
Ann Arbor

Asia
Shanghai
Singapore

Europe
Maidenhead

Japan
Tokyo

Technical Offices

America
Ann Arbor

Asia
Kunshan

Europe
Kielce
Newark
Ratingen

Japan
Fujisawa
Maebashi

Plants

America (North)
Ann Arbor
Bennington
Clarinda
Franklin
Liberty

America (South)
Suzano

Asia
Anshun
Balakong
Chachoengsao
Changshu
Changwon
Chennai
Chonburi
Dongguan
Jakarta
Kunshan
Suzhou
Zhangjiagang

Europe
Kielce
Munderkingen
Newark
Peterlee
Torino

Japan
Fujisawa
Hanyu
Haruna
Konan
Otsu
Maebashi
Takasaki
Tanakura
Ukiha

Sales Offices

Africa
Johannesburg

America (North)
Ann Arbor
Atlanta
Bennington
Chicago
Indianapolis
Los Angeles
Miami
Montreal
San Jose
Toronto
Vancouver

America (South)
Belo Horizonte
Buenos Aires
Joinville
Mexico City
Porto Alegre
Recife
São Paulo

Asia
Anshun
Bangkok
Beijing
Chengdu
Chennai
Guangzhou
Hongkong
Jakarta
Johor Bahru
Kota Kinabalu
Kuala Lumpur
Manila
Prai
Seoul
Shanghai
Singapore
Taichung
Tainan
Taipei

Europe
Barcelona
Düsseldorf
Istanbul
Leipzig
Maidenhead
Milano
Newark
Paris
Stuttgart
Tilburg
Warsaw

Japan
Nagoya
Tokyo

Australia
Adelaide
Auckland
Brisbane
Melbourne
Perth
Sydney

TERMINOLOGY

DESIGN AND CLASSIFICATION

Rolling bearings use balls or rollers, located between bearing rings, to minimize friction. The rolling elements are separated and held in position by "cages".

The construction of six of the most common rolling element bearings are illustrated here for identification of nomenclature. Specific dimensions and details for these bearings are given in the dimensional tables in the following sections of this catalog.

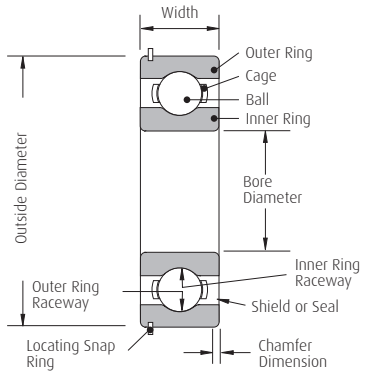

Single Row Deep Groove Ball Bearing

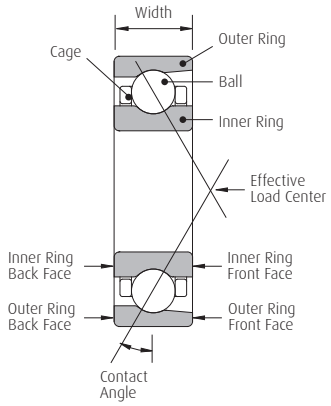

Single Row Angular Contact Ball Bearing

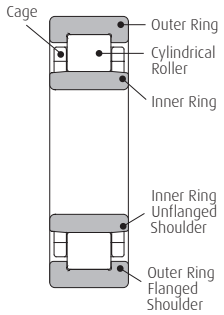

Cylindrical Roller Bearing (NU Style)

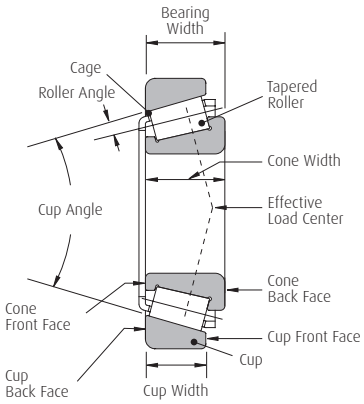

Tapered Roller Bearing

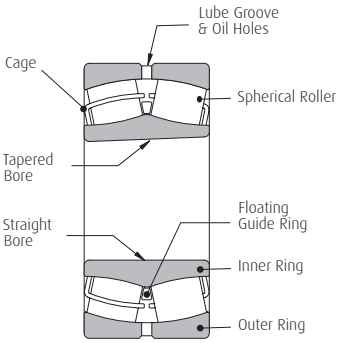

Spherical Roller Bearing

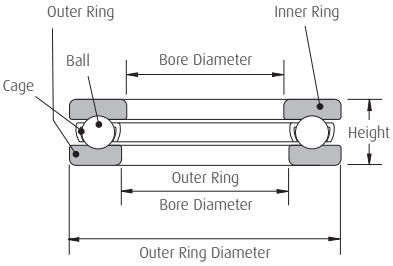

Single Direction Thrust Ball Bearing

BEARING TYPES AND PERFORMANCE

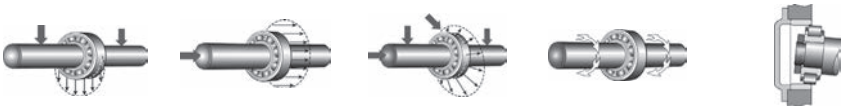

	Bearing Type	Series	Radial Loads	Axial Loads	Combined Loads	High Speeds	Angular Misalignment
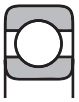	Deep Groove Ball Bearing	600-6000-6200-6300-16000-16100-6800-6900-BL	Good	Fair 2 directions	Good	Excellent	Fair
	Double Row Deep Groove Ball Bearing	4200-4300	Good	Fair 2 directions	Fair	Fair	Poor
	Angular Contact Ball Bearing	7200-7300	Good	Good 1 direction only	Good	Excellent	Poor
	Double Row Angular Contact Ball Bearing	3200-3300-5200-5300	Good	Good 2 directions	Good	Fair	Poor
	Four-Point Contact Ball Bearing	QJ200-QJ300	Poor	Good 2 directions	Fair	Good	Poor
	Self-Aligning Ball Bearing	1200-1300-2200-2300	Fair	Poor 2 directions	Poor	Good	Excellent
	Cylindrical Roller Bearing	NU-N200-300-400-1000-2200-2300	Good	None	None	Excellent	Poor
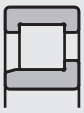	Cylindrical Roller Bearing	NJ-NF200-300-400-1000-2200-2300	Good	Fair 1 direction only	Fair	Good	Poor
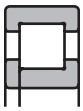	Cylindrical Roller Bearing	NUP200-300-400-1000-2200-2300	Good	Fair 2 directions	Fair	Good	Poor
	Tapered Roller Bearing	HR30200-30300-30300DJ-32000-32200-32300-33000-33100-33200	Good	Good 1 direction only	Good	Fair	Poor
	Spherical Roller Bearing	21300-22200-22300-23000-23100-23200-23900-24000-24100	Excellent	Fair 2 directions	Good	Fair	Excellent
	Thrust Ball Bearing	51100-51200-51300-51400-52200-52300-52400	None	Good 1 direction only	None	Poor	None

PRECISION CLASS

BEARING TOLERANCE STANDARDS

The dimensional and running accuracies of rolling bearings are standardized by ISO with regard to the following items:

- Tolerances for bore diameter, outer diameter, individual ring width, and overall width
- Tolerances for absolution dimensions of inscribed circle diameter and circumscribed circle diameter
- Tolerances for chamfer dimension
- Tolerances for width variations
- Tolerances for taper angle and taper bore diameters
- Tolerances for radial runout of inner ring and outer rings
- Tolerances for axial runout of inner and outer rings
- Tolerances for side or face runout of inner ring
- Tolerances for side or face runout of outer ring

PRECISION STANDARDS

Equivalent Standards (reference)	JIS [1] DIN [2]	Class 0 P0	Class 6 P6	Class 5 P5	Class 4 P4	Class 3 P3	Class 2 P2
ANSI/ABMA[3]	Ball Bearings	ABEC 1	ABEC 3	ABEC 5 (CLASS 5P)	ABEC 7 (CLASS 7P)	ABEC 7/9	ABEC 9 (CLASS 9P)
	Roller Bearings	RBEC 1	RBEC 3	RBEC 5			
	Tapered Roller Bearings	CLASS 4	CLASS 2	CLASS 3	CLASS 0		CLASS 00

[1] JIS: Standards for Japanese Industry, [2] DIN: German Institute for Standards, [3] ABMA: American Bearing Manufacturers Association.

BEARING IDENTIFICATION

BEARING NUMBER FORMULATION

Bearings are identified by numbers and letters which designate bearing type, boundary dimensions, tolerance class, internal clearance and other specifications. The numbers used for standard bearings conform to ISO 15, Designation of Rolling Bearings. Boundary dimensions for the most commonly used bearings are based on the ISO Boundary Dimensions Tables.

In order to establish certain standards in addition to those specified in ISO, NSK also uses various designations of its own.

	Bearing Series	Bearing Type	Dimension Series	
			Width* Series	Diameter Series
Single Row Deep Groove Ball Bearing	68	6	(1)	8
	69	6	(1)	9
	60	6	(1)	0
	62	6	(0)	2
	63	6	(0)	3
	64	6	(0)	4
Single Row Angular Contact Ball Bearing	70	7	(1)	0
	72	7	(0)	2
	73	7	(0)	3
	74	7	(0)	4
Self-Aligning Ball Bearing	12	1	(0)	2
	13	1	(0)	3
	22	2	(2)	2
	23	2	(2)	3
Single Row Cylindrical Roller Bearing	NU10	NU	1	0
	NU2	NU	(0)	2
	NU22	NU	2	2
	NU3	NU	(0)	3
	NU23	NU	2	3
	NU4	NU	(0)	4
	NJ2	NJ	(0)	2
	NJ22	NJ	2	2
	NJ3	NJ	(0)	3
	NJ23	NJ	2	3
	NJ4	NJ	(0)	4
	N2	N	(0)	2
	N3	N	(0)	3
	N4	N	(0)	4
	NF2	NF	(0)	2
	NF3	NF	(0)	3
	NF4	NF	(0)	4
Double Row Cylindrical Roller Bearing	NNU49	NNU	4	9
	NN30	NN	2	0
Metric Tapered Roller Bearing	320	3	2	0
	302	3	(0)	2
	322	3	2	2
	303	3	0	3
	323	3	2	3
Spherical Roller Bearing	230	2	3	0
	231	2	3	1
	222	2	2	2
	232	2	3	2
	213**	2	0	3
	223	2	2	3
Thrust Ball Bearing with Flat Seat	511	5	1	1
	512	5	1	2
	513	5	1	3
	514	5	1	4
	522	5	2	2
	523	5	2	3
	524	5	2	4
Spherical Roller Thrust Bearing	292	2	9	2
	293	2	9	3
	294	2	9	4

*The width series numbers shown in parentheses are usually omitted.

**213 is customary usage since this series would be 203 according to standard practice.

BEARING NUMBER FORMULATION (CONT.)

Bearing series numbers indicate bearing types and dimension series. They constitute the basic number structure for bearing designations. These are shown on page A-7. Supplementary symbols and meanings of typical numbers and symbols are shown on page A-8.

Typical examples of bearing designations are illustrated below:

6 3 08 ZZ C3

- C3: Radial clearance (C3)
- ZZ: Shields on Both Sides
- 08: Bearing Bore (40mm)
- 3: Diameter Series 3
- 6: Single Row Deep Groove Ball Bearing

1 2 06 K + H206

- H206: Adapter with 25mm Bore
- K: Tapered Bore (1:12 Taper)
- 06: Bearing Bore (30mm)
- 2: Diameter Series 2
- 1: Self-Aligning Ball Bearing

NU 3 18 M ( )

- ( ): Radial Clearance (Blank is CN)
- M: Machined Brass Cage
- 18: Bearing Bore (90mm)
- 3: Diameter Series 3
- NU: Cylindrical Roller Bearing (NU Type)

NN 3 0 17 K CC1 P4

- P4: Tolerance to ISO Class 4
- CC1: Radial Clearance for Matched Cylindrical Roller Bearings
- K: Tapered Bore (1:12 Taper)
- 17: Bearing Bore (85mm)
- 0: Diameter Series 0
- 3: Width Series 3
- NN: Cylindrical Roller Bearing (NN Type)

7 2 20 A DB C3

- C3: Axial Clearance (C3)
- DB: Back-to-Back Arrangement
- A: Contact Angle (30°)
- 20: Bearing Bore (100mm)
- 2: Diameter Series 2
- 7: Single Row Angular Contact Ball Bearing

HR 3 0 2 07 J

- J: Small Diameter of Outer Ring Raceway and Contact Angle Conform to ISO Standard
- 07: Bearing Bore (35mm)
- 2: Diameter Series 2
- 0: Width Series 0
- 3: Tapered Roller Bearing
- HR: High Capacity Bearing

2 4 0 /1000 M K30 E4 C3

- C3: Radial Clearance (C3)
- E4: Outer Ring with Lubrication Groove and Holes
- K30: Tapered Bore (1:30 Taper)
- M: Machined Brass Cage
- /1000: Bearing Bore (1,000mm)
- 0: Diameter Series 0
- 4: Width Series 4
- 2: Spherical Roller Bearing

5 1 2 15

- 15: Bearing Bore (75mm)
- 2: Diameter Series 2
- 1: Height Series 1
- 5: Thrust Ball Bearing

FORMULATION OF BEARING NUMBERS

Basic Bearing
Bearing Series
Bore
Contact Angle
Internal Design
Material
Cage
Seals, Shields

Bearing Series	
68 69 60	Single Row Deep Groove Ball Bearings
70 72 73	Single Row Angular Contact Ball Bearings
12 13 22	Self-Aligning Ball Bearings
NJ 2 N 3 NN 30	Cylindrical Roller Bearings
320 322 323	Tapered Roller Bearings
230 222 223	Spherical Roller Bearings
511 512 513	Thrust Ball Bearings with Flat Seats
292 293 294	Spherical Roller Thrust Bearings

Bore	
1 thru 9	Bore in mm
00	10mm
01	12mm
02	15mm
03	17mm
/22	22mm
/28	28mm
/32	32mm
04 thru 96	Multiply by 5 for Bore in mm (ex. 04=20mm)
/500 thru /2500	Bore in mm

Internal Design	
A	Modified Internal Design
J	Small Diameter of Outer Ring Raceway and Contact Angle of Tapered Roller Bearings Conform to ISO (For High Capacity Bearings)
CA	Spherical Roller Bearings with Machined Cages
CD	Spherical Roller Bearings with Pressed Cages
E	Extra Capacity Design
H	Spherical Radial and Thrust Roller Bearings with Polyamide cage
HR (prefix)	Tapered Roller Bearings High Capacity

Contact Angle Angular Contact Ball Bearings	
A	30°
A5	25°
B	40°
C	15°

Contact Angle Tapered Roller Bearings	
(none)	Contact Angle less than 17°
C	Contact Angle Approx. 20°
D	Contact Angle Approx. 28°

Seals, Shields	
Z	Shield on One Side Only
ZZ	Z Shields on Both Sides
DU	Contact Rubber Seal on One Side Only
DDU	DU Seals on Both Sides
V	Non-Contact Rubber Seal on One Side Only
VV	V Seals on Both Sides

Material	
g	Case-Hardened Steel Used in Outer Rings, Inner Rings and Rolling Elements
h	Stainless Steel Used in Outer Rings, Inner Rings and Rolling Elements

Cages	
M	Machined Brass Cages
W	Pressed Steel Cages
T,TR	Phenolic Resin/Cages (Ball Bearing)
T	Polyamide Cages (Roller Bearing)
TYN, TIX	Polyamide Cages (Ball Bearing)
V	Bearings without Cages (Cageless Ball and Rolling Bearings

FORMULATION OF BEARING NUMBERS (CONTINUED) - SUPPLEMENTARY SYMBOLS

Supplementary Features
Features
Arrangement
Radial Internal Clearance
Tolerance Class
Special Specifications
Spacer or Sleeve
Lubrication

Feature Designs of Outer and Inner Ring	
K	Tapered Bore (Taper 1:12)
K30	Tapered Bore (Taper 1:30)
E4	Lubrication Groove and Holes in Outer Ring
N	Snap Ring Groove in Outer Ring
NR	Snap Ring Groove with Snap Ring in Outer Ring

Tolerance Class	
(None)	ISO Class 0 (ABEC 1)
P6	ISO Class 6 (ABEC 3)
P5	ISO Class 5 (ABEC 5)
P4	ISO Class 4 (ABEC 7)

Special Specifications	
X28	Inner and Outer Rings Heat Stabilized for Maximum Working Temperature of 200°C
S11	Spherical Bearings Heat Stabilized to 200°C
P55	High Running Accuracy of Inner and Outer Rings

Arrangement	
DB	Back to Back Duplex Arrangement
DF	Face to Face Duplex Arrangement
DT	Tandem Duplex
SU	Arrangement Single Universal - Bearings with front and back face standout adjusted to be equal
DU	Duplex Universal (SU sold as pair)

Lubrication	
AKC	Exxon Andok C
AS2	Shell Alvania No. 2
B32	Exxon Beacon 325
SRI	Chevron SRI-2
SDR	Shell Dolium R

Spacer or Sleeve	
+K	Bearings with Outer Ring Spacer
+L	Bearings with Inner Ring Spacer
+KL	Bearings with Both Outer and Inner Ring Spacers
+H	Adapter Designation
+AH	Withdrawal Sleeve Designation
HJ	Angle Ring Designation

Radial Internal Clearance		
C2	For All Radial Ball Bearings	Clearance Less Than Normal
CO		Normal Clearance
C3		Clearance Greater Than Normal
C4		Clearance Greater Than C3
CC1	For Matched Cylindrical Roller Bearings	Clearance Less Than C
CC2		Clearance Less Than Normal
CC		Normal Clearance
CC3		Clearance Greater Than Normal
CC4		Clearance Greater Than CC3
CC5		Clearance Greater Than CC4
MC2	For Extra Small Ball Bearings and Miniature Bearings	Clearance Less Than MC3
MC3		Normal Clearance
MC4		Clearance Greater Than MC3
MC5		Clearance Greater Than MC4

HOW TO ORDER REPLACEMENT BEARINGS

Ordering the correct replacement bearing is a critical task – but one that is not difficult if you take time to gather the right information. Just follow these steps:

1. Identify – the type of bearing you need to replace.

- Ball Bearing – Single Row, Double Row, Angular Contact
- Roller Bearing – Cylindrical, Spherical, Tapered
- Thrust Bearing – Ball or Roller
- Split Pillow Block – Pillow Blocks
- Super Precision – Angular Contact Ball, Cylindrical Roller, Ball Screw Support
- Linear Motion – Linear Guides, Ball Screws, Monocarriers

2. Locate – the identification number on the bearing.

Bearing identification numbers are usually located on the inner ring face, outer ring face or bearing O.D. Mounted units are identified by a number tag fastened to the unit or by a housing number cast into the housing cap. For linear products contact NSK.

3. Measure – if you need to.

If a bearing identification number is not legible, you will need to determine the following:

1. Inner ring bore (inside diameter)
2. Outer ring outside diameter
3. Inner width and outer width (these may be different)
4. Shape of the bore and/or outside diameter of bearing – spherical, tapered or cylindrical
5. Envelope dimensions of the linear block and rail as well as notes on lube, sealing or special features

4. Record – additional relevant information.

The more information available, the easier it will be to identify the replacement bearing needed. Record:

1. Unique features such as lubrication holes, snap ring grooves, machined shoulders, etc.
2. Application/equipment data

5. Look – in the appropriate section of the catalog.

1. Ball Bearings
2. Cylindrical Roller Bearings
3. Spherical Roller Bearings
4. Tapered Roller Bearings
5. Thrust Bearings
6. Split Pillow Blocks
7. Super Precision Bearings
8. Linear Motion
9. Engineering

If you are still unable to identify the bearing you need, call your NSK Distributor.

STEPS FOR ORDERING REPLACEMENT BEARINGS

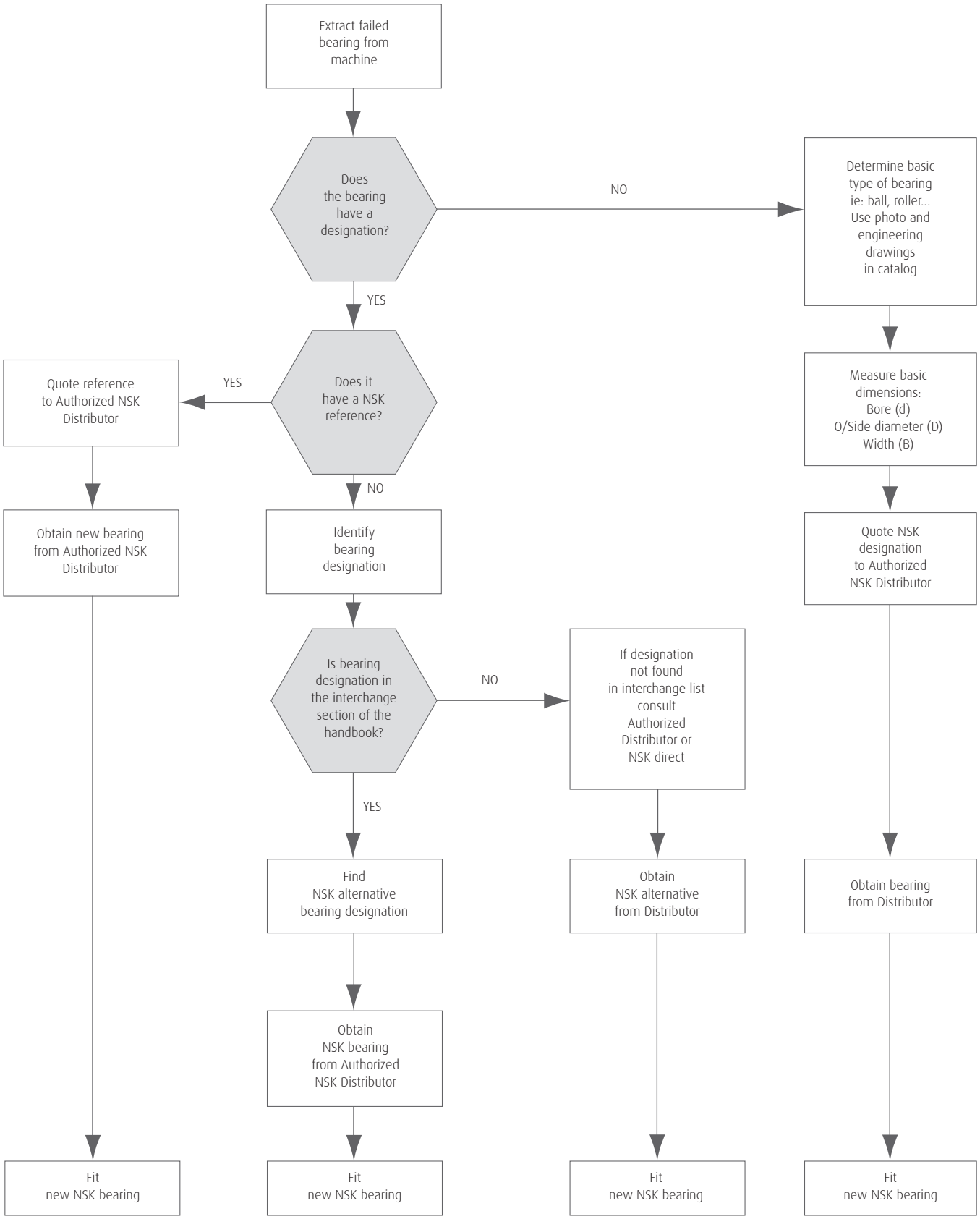

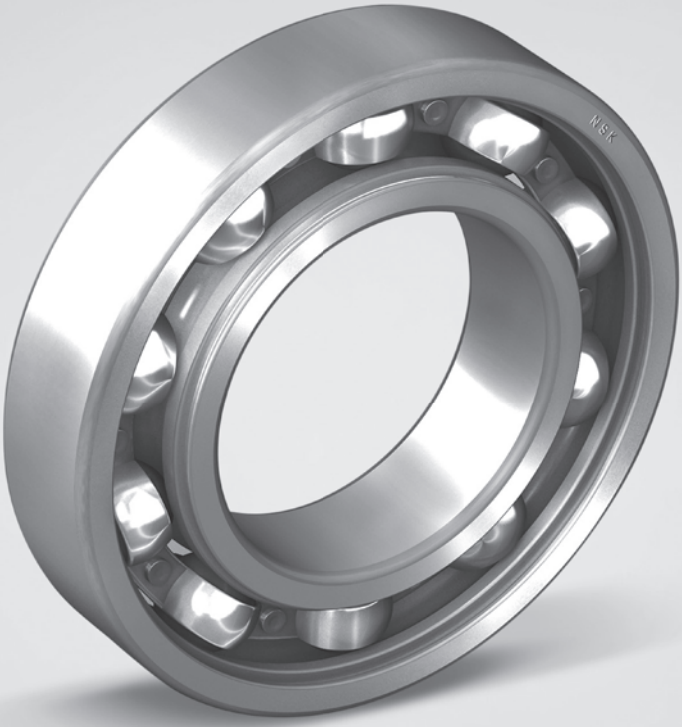
NSK

BALL BEARINGS

SINGLE ROW DEEP GROOVE BALL BEARINGS

Nomenclature B-1
Interchange B-2
Applications B-2
Features B-3
Internal Clearance B-4
Snap Ring and Groove Dimensions B-5
R-Series B-7
600 Series B-8
6000 Series B-9
6200 Series B-11
6300 Series B-13
6800 Series B-15
6900 Series B-17
63200 Series B-19
63300 Series B-20
BL200/300 Series B-21

DOUBLE ROW ANGULAR CONTACT BALL BEARINGS

Nomenclature B-23
Interchange B-24
Applications B-24
3200/3300 Series B-25
5200/5300 Series B-27

SELF-ALIGNING BALL BEARINGS

Nomenclature B-31
Applications B-31
Interchange B-32
Internal Clearance B-32
1200/1300 Series B-33
2200/2300 Series B-35

ANGULAR CONTACT BALL BEARINGS

Nomenclature B-37
Interchange B-38
Applications B-38
7200 Series B-39
7300 Series B-41
7400 Series B-43

SINGLE ROW DEEP GROOVE BALL BEARINGS

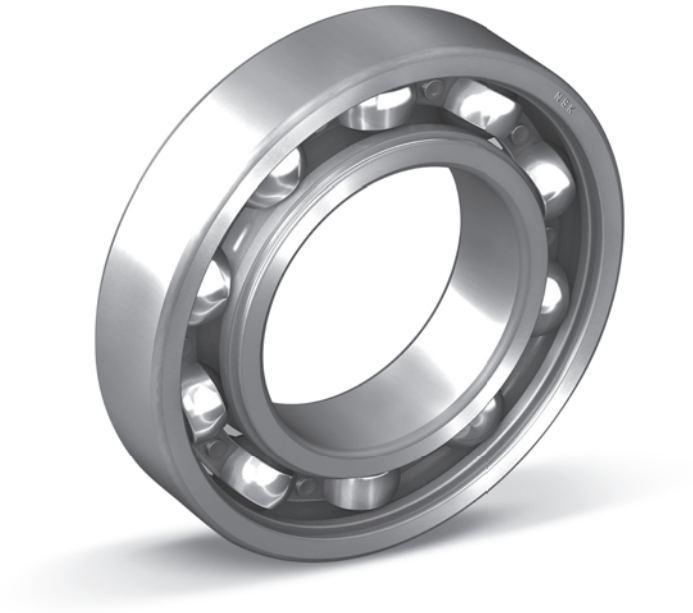

Basic Type & Series

R: Inch
600: Metric, Extra Small
6000: Metric, Extra Light
6200: Metric, Light
6300: Metric, Medium
6800: Metric, Extra Thin Section
6900: Metric, Very Thin Section
63200: Metric, Light Cartridge
63300: Metric, Medium Cartridge
BL 200: Metric, Maximum Capacity, Light
BL 300: Metric, Maximum Capacity, Medium

Cage Option

M: Brass
Blank: Steel
T1X: Polyamide

Internal Clearance

C2: Tighter than Normal
Blank: Normal
C3: Greater than Normal
C4: Greater than C3
CM: Electronic Motor Standard Clearance

Grease Type

NS7: NS Hi-Tube
AS2: Alvania #2
B32: Beacon 325
SRI: Chevron SRI-2
EEM: Polyrex EM

HTF **62** **05** **T1X** **ZZ** **C3** **E** **SRI** **S**

Material Prefix

HTF: High Tough
Blank: Standard Materials

Bore Size

(04 and up: multiply last two numbers by 5 to get bore in mm)

00: 10 mm **04:** 20 mm
01: 12 mm **05:** 25 mm
02: 15 mm **12:** 60 mm
03: 17 mm **20:** 100 mm

Features

V: Single Non-Contact Seal
VV: Double Non-Contact Seal
Z: Single Shield
ZZ: Double Shield
D/DD: Single Contact Seal
DD/DDU: Double Contact Seal
NR: Snap Ring and Groove
M: Brass Cage
Blank: Steel Cage

Noise Level

E: Electric Motor Grade

Grease Fill

S: Standard
L: Light
H: Heavy

Please refer to the bearing tables for exact part number options.

INTERCHANGE

Description		Interchange					
		NSK	SKF	FAF/TIMKEN	FAG	MRC	NTN
Part Number	Inch	Rxx	Rxx	SxxK	Rxx	Rxx	Rxx
	Extra Small	6xx	6xx	3xK	6xx	3x	6xx
	Extra Light	60xx	60xx	91xxK	60xx	1xxK	60xx
	Light	62xx	62xx	2xxK	62xx	2xxS	62xx
	Medium	63xx	63xx	3xxK	63xx	3xxS	63xx
	ExtraThin Section	68xx	618xx	--	618xx	18xxS	--
	Very Thin Section	69xx	619xx	93xxK	619xx	19xxS	69xx
	Thin Section	16xxx	16xxx	--	16xxx	--	--
	Maximum Capacity, Light	BL2xx	2xx	2xxW	2xx	2xxM	BL2xx
	Maximum Capacity, Medium	BL3xx	3xx	3xxW	3xx	3xxM	BL3xx
	Cartridge Type	632xx 633xx	4622xx 4623xx	W2xx W3xx	335xx 336xx	2xxC 3xxC	632xx 633xx
Part Number Suffix	Two Seals (Non Contact)	VV	--	--	2RSD	--	LLB
	Two Seals (Contact)	DDU	2RS	PP	2RSR	ZZ	LLU
	One Seals (Contact)	DU	RS	P	RSR	Z	LU
	Two Shield	ZZ	2Z	DD	2ZR	FF	ZZ
	One Shield	Z	Z	D	ZR	F	Z
	Snap Ring	NR	NR	G	NR	G	NR
	Steel Cage	BLANK	J or BLANK	BLANK	J	BLANK or STL	BLANK
	Polyamide Cage	T1X	TN9	PRB	TNH or TVH	TN9	T2
	Brass Cage	M	M	MBR	Y	BRS	L1
	Heat Stabilized 200°C	X28	S1	--	S1	HT	PREFIX TS3
	Tight Clearance	C2	C2	H	C2	C2	C2
	Normal Clearance	BLANK	BLANK	R	BLANK	C0	BLANK
	Greater than Normal Clearance	C3	(C3)	P	C3	C3	C3
	Greater than C3 Clearance	C4	C4	J	C4	C4	C4
	Radial Clearance in Microns	CGXX	RLXX	--	RXX	--	--
	Electric Motor Grade	E	EM (C3)	--	--	EMQ	--

The competitive manufacturers are provided for a convenient source of unit substitution. They can be considered interchangeable in most instances, but for special applications, please contact NSK. NSK assumes no liability with respect to errors or omissions.

APPLICATIONS

› Transmissions › Electric Motors & Generators › Electrical Appliances › Pumps & Compressors › Blowers & Fans
› Speed Changers › Gear Boxes & Drives › Woodworking Machinery › Lawn & Garden Equipment › Turbines
› Farm Machinery › Construction Machinery › Oil Field Machinery › Elevators › Conveying Equipment › Hoists & Cranes
› Power Hand Tools › Industrial Valves › Rolling Mill Machinery › Textile Machinery › Paper Machinery › Printing Machinery
› Food Products Machinery › Packaging Machinery › Medical & Dental Equipment (Extra Small) › Robotics Equipment (Thin)
› Industrial Clutches › Slip Joints › Skate Boards (608ZZ) › Inline Skates (608ZZ)

SINGLE ROW DEEP GROOVE BALL BEARINGS

Single-Row Deep Groove Ball Bearings are classified into several types.
The proper amount of good quality grease is packed in shielded and sealed ball bearings. A comparison of the features of each type is shown below.

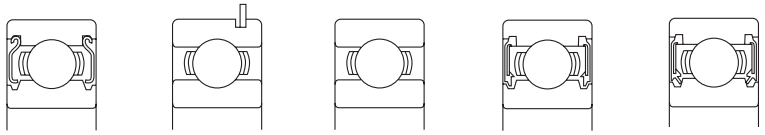

Shielded Type ZZ | With Snap Ring NR | Open Type | Non-Contact Sealed Type VV | Contact Sealed Type DD–DDU

FEATURES OF SEALED BALL BEARINGS

Type	Shielded Type (ZZ Type)	Non-Contact Rubber Sealed Type (VV Type)	Contact Rubber Sealed Type (DDU Type)
Torque	Low	Low	Higher than ZZ, VV types due to contact seal
Speed Capability	Good	Good	Limited by contact seal
Grease Sealing Effectiveness	Good	Better than ZZ Type	A little better than VV Type
Dust Resistance	Good	Better than ZZ Type (usable in moderately dusty environment)	Best (usable even in very dusty environment)
Water Resistance	Not Suitable	Not Suitable	Good (usable even if fluid is splashed on bearing)
Operating Temperature [1]	-10 to +110°C	-10 to +110°C	-10 to +100°C

Note: [1] The above temperature range applies to standard bearings. By using cold or heat resistant grease and changing the type of rubber, the operating temperature range can be extended. For such applications, please contact NSK.

For deep groove ball bearings, pressed cages are usually used. For big bearings, machined brass cages are used. (Refer to below table.)

Machined cages are also used for high speed applications.

STANDARD CAGES FOR DEEP GROOVE BALL BEARINGS

Series	Pressed Steel Cage	Machined Brass Cage
68	6800 - 6838	6840 - 68/800
69	6900 - 6936	6938 - 69/800
160	16001 - 16026	16028 - 16064
60	6000 - 6040	6044 - 60/670
62	6200 - 6240	6244 - 6272
63	6300 - 6332	6334 - 6356

MAXIMUM TYPE BALL BEARINGS

Maximum Type Ball Bearings contain a larger number of balls than normal deep groove ball bearings. A filling slot is located in the inner and outer rings. Because of their filling slots, they are not suitable for applications with high axial loads.

BL2 and BL3 types of bearings have boundary dimensions equal to those of single-row deep groove ball bearings of Series 62 and 63 respectively. Besides the open type, ZZ type shielded bearings are also available.

When using these bearings, it is important for the filling slot in the outer ring to be outside of the loaded zone as much as possible.

Their cages are pressed steel.

SINGLE ROW DEEP GROOVE BALL BEARINGS RADIAL INTERNAL CLEARANCE

RADIAL INTERNAL CLEARANCE IN SINGLE ROW DEEP GROOVE BALL BEARINGS UNDER NO LOAD

Units: inch

Nominal Bore Diameter d (mm)		Radial Internal Clearance							
		C2		C0		C3		C4	
over	incl.	low	high	low	high	low	high	low	high
(10mm only)*		+.0000	+.0003	+.0001	+.0005	+.0003	+.0009	+.0006	+.0011
10	18	+.0000	+.0004	+.0001	+.0007	+.0004	+.0010	+.0007	+.0013
18	24	+.0000	+.0004	+.0002	+.0008	+.0005	+.0011	+.0008	+.0014
24	30	+.0000	+.0004	+.0002	+.0008	+.0005	+.0011	+.0009	+.0016
30	40	+.0000	+.0004	+.0002	+.0008	+.0006	+.0013	+.0011	+.0018
40	50	+.0000	+.0004	+.0002	+.0009	+.0007	+.0014	+.0012	+.0020
50	65	+.0000	+.0006	+.0003	+.0011	+.0009	+.0017	+.0015	+.0024
65	80	+.0000	+.0006	+.0004	+.0012	+.0010	+.0020	+.0018	+.0028
80	100	+.0000	+.0007	+.0005	+.0014	+.0012	+.0023	+.0021	+.0033
100	120	+.0001	+.0008	+.0006	+.0016	+.0014	+.0026	+.0024	+.0038
120	140	+.0001	+.0009	+.0007	+.0019	+.0016	+.0032	+.0028	+.0045
140	160	+.0001	+.0009	+.0007	+.0021	+.0018	+.0036	+.0032	+.0051
160	180	+.0001	+.0010	+.0008	+.0024	+.0021	+.0040	+.0036	+.0058
180	200	+.0001	+.0012	+.0010	+.0028	+.0025	+.0046	+.0042	+.0064
200	225	–	+.0013	+.0010	+.0315	+.0029	+.0053	+.0049	+.0074
225	250	–	+.0014	+.0012	+.0035	+.0033	+.0059	+.0057	+.0084
250	280	–	+.0016	+.0014	+.0037	+.0035	+.0063	+.0061	+.0092
280	315	–	+.0020	+.0020	+.0043	+.0043	+.0071	+.0075	+.0104
315	355	–	+.0022	+.0022	+.0049	+.0049	+.0079	+.0085	+.0116
355	400	–	+.0026	+.0026	+.0055	+.0055	+.0089	+.0096	+.0134

*For bore sizes smaller than 10mm, refer to Table 10.39.

RADIAL INTERNAL CLEARANCES IN EXTRA SMALL & MINIATURE BALL BEARINGS UNDER NO LOAD

Units: inch

Clearance Symbols (Among these NSK Standard Clearances, MC5 is the most widely used)											
MC1		MC2		MC3		MC4		MC5		MC6	
low	high	low	high	low	high	low	high	low	high	low	high
+.0000	+.0002	+.0001	+.0003	+.0002	+.0004	+.0003	+.0005	+.0005	+.0008	+.0008	+.0011

SNAP RING AND GROOVE DIMENSIONS

SERIES 6000, 6200, 6300 AND 6400

Units: inch

Bearing Bore d (mm)				Snap Ring Groove Position, a		Groove Width, b	Snap Ring Thickness, f	Snap Ring O.D., D_2	Housing Bore, Dx
Dimension Series									
0	2	3	4	0	2,3,4	med.	med.	max.	min.
10	–	–	–	0.0500	–	0.0402	0.0311	1.1299	1.1575
12	–	–	–	0.0500	–	0.0402	0.0311	1.2087	1.2362
–	10	9	8	–	0.0780	0.0591	0.0421	1.3661	1.3976
15	12	–	9	0.0780	0.0780	0.0591	0.0421	1.4449	1.4764
17	15	10		0.0780	0.0591	0.0421	1.5630	1.5945	1.5945
–	–	12	10	–	0.0780	0.0591	0.0421	1.626	1.6535
–	17	–	–	–	0.0780	0.0591	0.0421	1.7559	1.7913
20	–	15	12	0.0780	0.0780	0.0591	0.0421	1.8228	1.8504
22	–	–	–	0.0780	–	0.0591	0.0421	1.9016	1.9291
25	20	17		0.0939	0.0591	0.0421	2.0748	2.1063	2.1063
–	22	–	–	–	0.0939	0.0591	0.0421	2.1929	2.2244
28	25	20	15	0.0780	0.0939	0.0591	0.0421	2.2795	2.3031
30	–	–	–	0.0780	–	0.0591	0.0421	2.3898	2.4213
–	–	22	–	–	0.0939	0.0591	0.0421	2.4291	2.4606
32	28	–	–	0.0780	0.0939	0.0591	0.0421	2.5079	2.5394
35	30	25	17	0.0780	0.1250	0.0807	0.0650	2.6654	2.6969
–	32	–	–	–	0.1250	0.0807	0.0650	2.7835	2.815
40	–	28	–	0.0941	0.1250	0.0807	0.0650	2.937	2.9921
–	35	30	20	–	0.1250	0.0807	0.0650	3.0945	3.1496
45	32			0.0807	0.0650	3.2126	3.2677	3.2126	3.2677
50	40	35	25	0.0941	0.1250	0.0807	0.0650	3.4094	3.4646
–	45	–	–	–	0.1250	0.0807	0.0650	3.6063	3.6614
55	50	40	30	0.1130	0.1250	0.1122	0.0949	3.7992	3.8583
60	–	–	–	0.1130	–	0.1122	0.0949	4.0000	4.0551
65	55	45	35	0.1130	0.1250	0.1122	0.0949	4.1929	4.252
70	60	50	40	0.1130	0.1250	0.1122	0.0949	4.5906	4.6457
75	–	–	–	0.1130	–	0.1122	0.0949	4.7874	4.8425
–	65	55	45	–	0.1559	0.1280	0.1091	5.1063	5.1772
80	70	–	–	0.1130	0.1559	0.1280	0.1091	5.3031	5.374
85	75	60	50	0.1130	0.1559	0.1280	0.1091	5.5000	5.5709
90	80	65	55	0.1409	0.1880	0.1280	0.1091	5.8937	5.9843
95	–	–	–	0.1409	–	0.1280	0.1091	6.0906	6.1811
100	85	70	60	0.1409	0.1880	0.1280	0.1091	6.2874	6.378
105	90	75	65	0.1409	0.1880	0.1280	0.1091	6.6811	6.7717
110	95	80		0.2191	0.1437	0.1437	7.2008	7.2835	7.2835
120	100	85	70	0.1409	0.2191	0.1437	0.1437	7.5945	7.6772
–	105	90	75	–	0.2191	0.1437	0.1437	7.9882	8.0709
130	110	95	80	0.2191	0.2191	0.1437	0.1437	8.3819	8.4646

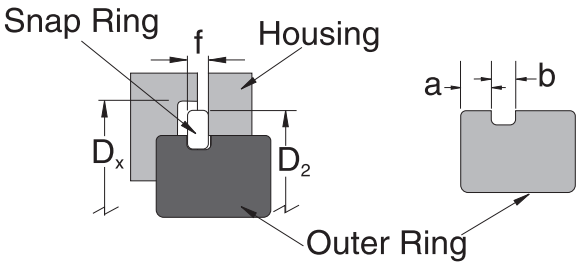

SERIES 6800 AND 6900

Units: inch

Bearing Bore d (mm)		Snap Ring Groove Position, a		Groove Width, b	Snap Ring Thickness, f	Snap Ring O.D., D_2	Housing Bore, Dx
Dimension Series							
8	9	8	9	med.	med.	max.	min.
–	10	–	1.0677	0.0222	0.0256	0.9764	1.0039
–	12	–	1.0677	0.0222	0.0256	1.0551	1.0827
–	15	–	1.3226	0.0423	0.0315	1.2126	1.2402
–	17	–	1.3226	0.0423	0.0315	1.2913	1.3189
20	–	0.0482	–	0.0423	0.0315	1.3701	1.3976
22	–	0.0482	–	0.0423	0.0315	1.4488	1.4764
25	20	0.0482	1.7305	0.0423	0.0315	1.5669	1.5945
–	22	–	1.7305	0.0423	0.0315	1.6457	1.6732
28	–	0.0482	–	0.0423	0.0315	1.685	1.7126
30	25	0.0482	1.7305	0.0423	0.0315	1.7638	1.7913
32	–	0.0482	–	0.0423	0.0315	1.8425	1.8701
–	28	–	1.7305	0.0423	0.0315	1.8819	1.9094
35	30	0.0482	1.7305	0.0423	0.0315	1.9606	1.9882
40	32	0.0482	1.7305	0.0423	0.0315	2.1575	2.1850
–	35	–	1.7305	0.0423	0.0315	2.2756	2.3031
45	–	0.0482	–	0.0423	0.0315	2.3937	2.4213
–	40	–	1.7305	0.0423	0.0315	2.5512	2.5787
50	–	0.0482	–	0.0423	0.0315	2.6693	2.6969
–	45	–	1.7305	0.0571	0.0421	2.7874	2.8346
55	50	0.064	1.7305	0.0571	0.0421	2.9449	2.9921
60	–	0.064	–	0.0571	0.0421	3.2559	3.3071
–	55	–	2.1374	0.0571	0.0421	3.3228	3.3858
65	60	0.0640	2.1374	0.0571	0.0421	3.5197	3.5827
70	65	0.0640	2.1374	0.0571	0.0421	3.7165	3.7795
75	–	0.0640	–	0.0571	0.0421	3.9134	3.9764
80	70	0.0640	2.5453	0.0571	0.0421	4.1102	4.1732
–	75	–	2.5453	0.0571	0.0421	4.3583	4.4094
85	80	0.0787	2.5453	0.0571	0.0421	4.5551	4.6063
90	–	0.0787	–	0.0571	0.0421	4.752	4.8031
95	85	0.0787	3.3610	0.0571	0.0421	4.9488	5.0000
100	90	0.0787	3.3610	0.0571	0.0421	5.1457	5.1969
105	95	0.0787	3.3610	0.0571	0.0421	5.3425	5.3937
110	100	0.0945	3.3610	0.0807	0.065	5.7362	5.7874
–	105	–	3.3610	0.0807	0.065	5.9331	5.9843
120	110	0.0945	3.3610	0.0807	0.065	6.1299	6.1811
130	120	0.126	3.3610	0.0807	0.065	6.7520	6.8110
140	–	0.126	–	0.0807	0.065	7.1457	7.2047
–	130	–	3.3610	0.0807	0.065	7.3425	7.4016
150	140	0.126	3.3610	0.0807	0.065	7.7362	7.7953
160	–	0.126	–	0.0807	0.065	8.1299	8.1890

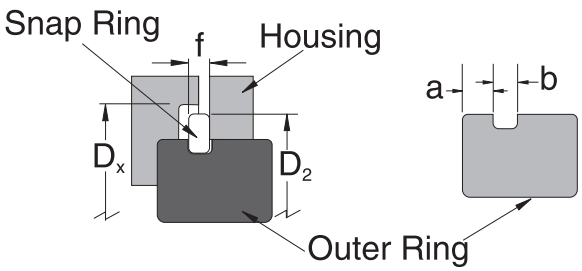

BALL BEARINGS: R-SERIES

SINGLE ROW, INCH DIMENSION

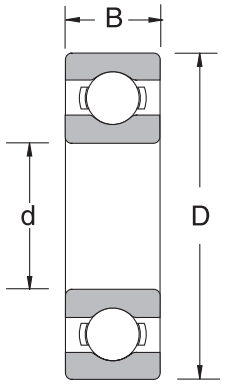

Common Options	
VV	Two Non-Contact Seals
DD/DDU	Two Contact Seals
ZZ	Two Shields
MC3/CO*	Normal Internal Clearance
MC5/C3	Greater than Normal Internal Clearance
T1X	Polyamide Cage

*Not shown in part number

Bearing Number	Nominal Bearing Dimensions						Preferred Shoulder Diameters						Basic Load Ratings				Limiting Speeds (RPM)		Bearing Weight (Approx.)	
	d		D		B		r*		Shaft		Housing		C_r		C_{or}					
	mm	inch	mm	inch	mm	inch	mm	inch	mm	inch	mm	inch	N	lbs	N	lbs	Grease	Oil	g	lbs
R2	3.175	0.1250	9.525	0.375	3.967	0.1562	0.3	0.012	4.8	0.189	8.0	0.315	630	142	218	49	56000	67000	1.36	0.003
R2A	3.175	0.1250	12.700	0.500	4.366	0.1719	0.3	0.012	4.6	0.181	8.2	0.323	640	144	225	51	53000	63000	3.30	0.007
R3	4.762	0.1875	12.700	0.500	3.967	0.1562	0.3	0.012	6.5	0.256	11.2	0.441	1300	293	485	109	43000	53000	2.21	0.005
R3ZZ	4.762	0.1875	12.700	0.500	4.978	0.1960	0.3	0.012	6.5	0.256	11.2	0.441	1300	293	485	109	43000	53000	2.79	0.006
R4B	6.350	0.2500	15.875	0.625	4.978	0.1960	0.3	0.012	8.4	0.331	13.8	0.543	1610	360	665	149	38000	45000	4.50	0.010
R4AA	6.350	0.2500	19.050	0.750	5.558	0.2188	0.4	0.016	9.0	0.354	16.6	0.654	2620	590	1060	238	36000	43000	7.48	0.016
R4AAZZ	6.350	0.2500	19.050	0.750	7.142	0.2812	0.4	0.016	9.0	0.354	16.6	0.654	2620	590	1060	238	36000	43000	9.17	0.020
R6	9.525	0.3750	22.225	0.875	5.558	0.2188	0.4	0.016	11.9	0.469	20.0	0.787	3350	750	1410	315	32000	38000	9.02	0.020
R6ZZ\VV	9.525	0.3750	22.225	0.875	7.142	0.2812	0.4	0.016	11.9	0.469	20.0	0.787	3350	750	1410	315	32000	38000	11.00	0.024
R8	12.700	0.5000	28.575	1.125	6.350	0.2500	0.4	0.016	15.1	0.594	26.2	1.031	5100	1150	2390	540	26000	32000	18.10	0.040
R8ZZ\VV	12.700	0.5000	28.575	1.125	7.938	0.3125	0.4	0.016	15.1	0.594	26.2	1.031	5100	1150	2390	540	26000	32000	22.70	0.050
R10	15.875	0.6250	34.925	1.375	7.142	0.2812	0.8	0.031	19.1	0.750	31.8	1.250	6000	1350	3250	730	22000	26000	27.20	0.060
R10ZZ\VV	15.875	0.6250	34.925	1.375	8.733	0.3438	0.8	0.031	19.1	0.750	31.8	1.250	6000	1350	3250	730	22000	26000	31.80	0.070
R12	19.050	0.7500	41.275	1.625	7.938	0.3125	0.8	0.031	23.0	0.906	37.3	1.469	9400	2110	5000	1130	18000	20000	45.40	0.100
R12ZZ\VV	19.050	0.7500	41.275	1.625	11.113	0.4375	0.8	0.031	23.0	0.906	37.3	1.469	9400	2110	5000	1130	18000	20000	54.40	0.120
R14	22.225	0.8750	47.625	1.875	9.525	0.3750	0.8	0.031	26.2	1.031	43.7	1.719	10100	2270	5850	1310	15000	18000	72.60	0.160
R14ZZ	22.225	0.8750	47.625	1.875	12.700	0.5000	0.8	0.031	26.2	1.031	43.7	1.719	10100	2270	5850	1310	15000	18000	81.60	0.180
R16	25.400	1.0000	50.800	2.000	9.525	0.3750	0.8	0.031	29.4	1.156	46.8	1.844	10100	2270	5850	1310	15000	18000	77.10	0.170
R16ZZ	25.400	1.0000	50.800	2.000	12.700	0.5000	0.8	0.031	29.4	1.156	46.8	1.844	10100	2270	5850	1310	15000	18000	86.20	0.190
R18	28.575	1.1250	53.975	2.125	9.525	0.3750	0.8	0.031	32.5	1.281	50.0	1.969	13200	2980	8300	1860	13000	15000	86.20	0.190
R18ZZ	28.575	1.1250	53.975	2.125	12.700	0.5000	0.8	0.031	32.5	1.281	50.0	1.969	13200	2980	8300	1860	13000	15000	95.30	0.210
R20	31.750	1.2500	57.150	2.250	9.525	0.3750	0.8	0.031	35.7	1.406	53.2	2.094	13200	2970	8350	1880	12000	15000	95.30	0.210
R20ZZ	31.750	1.2500	57.150	2.250	12.700	0.5000	0.8	0.031	35.7	1.406	53.2	2.094	13200	2970	8350	1880	12000	15000	104.00	0.229
R22	34.925	1.3750	63.500	2.500	11.113	0.4375	0.8	0.031	38.9	1.531	59.5	2.344	16000	3600	10300	2310	11000	13000	122.00	0.268
R22ZZ	34.925	1.3750	63.500	2.500	14.288	0.5625	0.8	0.031	38.9	1.531	59.5	2.344	16000	3600	10300	2310	11000	13000	132.00	0.290
R24	38.100	1.5000	66.675	2.625	11.113	0.4375	0.8	0.031	42.1	1.656	62.7	2.469	16800	3750	11500	2600	10000	12000	136.00	0.299

*Maximum fillet which corner radius of bearing will clear. C_r = Dynamic Radial Load Rating C_{or} = Static Radial Load Rating

Note: Limiting speeds are lower with contact seals. For more information, contact NSK.

BALL BEARINGS: 600 SERIES

SINGLE ROW, EXTRA SMALL

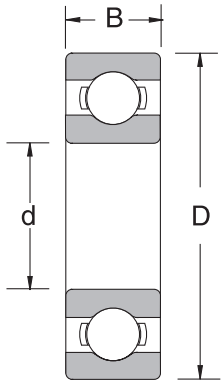

Common Options	
VV	Two Non-Contact Seals
DD	Two Contact Seals
ZZ	Two Shields
MC3	Normal Internal Clearance
MC5	Greater than Normal Internal Clearance
T1X	Polyamide Cage

Bearing Number	Nominal Bearing Dimensions						Preferred Shoulder Diameters						Basic Load Ratings				Limiting Speeds (RPM)		Bearing Weight (Approx.)	
	d		D		B		r*		Shaft		Housing		C_r		C_{or}					
	mm	inch	mm	inch	mm	inch	mm	inch	mm	inch	mm	inch	N	lbs	N	lbs	Grease	Oil	g	lbs
693	3	0.1181	8	0.3150	3.0	0.1181	0.15	0.005	4.2	0.165	6.8	0.268	560	126	180	40	60000	67000	0.61	0.001
693ZZ\VV	3	0.1181	8	0.3150	4.0	0.1575	0.15	0.005	4.3	0.169	7.3	0.287	560	126	180	40	60000	67000	0.83	0.002
623	3	0.1181	10	0.3937	4.0	0.1575	0.15	0.005	4.2	0.165	8.8	0.346	630	142	218	49	50000	60000	1.65	0.003
684	4	0.1575	9	0.3543	2.5	0.0984	0.10	0.003	4.8	0.189	8.2	0.323	640	144	225	51	53000	63000	0.63	0.001
684ZZ\VV	4	0.1575	9	0.3543	4.0	0.1575	0.10	0.003	5.2	0.205	8.1	0.319	640	144	225	51	53000	63000	1.01	0.002
694	4	0.1575	11	0.4331	4.0	0.1575	0.15	0.005	5.2	0.205	9.8	0.386	630	215	345	78	48000	56000	1.70	0.003
604	4	0.1575	12	0.4724	4.0	0.1575	0.20	0.007	5.6	0.220	10.4	0.409	960	215	345	78	48000	56000	2.25	0.004
624	4	0.1575	13	0.5118	5.0	0.1969	0.20	0.007	5.6	0.220	11.4	0.449	1300	293	485	109	40000	48000	3.03	0.006
634	4	0.1575	16	0.6299	5.0	0.1969	0.30	0.011	6.0	0.236	14.0	0.551	1730	390	670	151	36000	43000	5.24	0.015
685	5	0.1969	11	0.4331	3.0	0.1181	0.15	0.005	6.2	0.244	9.8	0.386	715	161	282	63	45000	53000	1.20	0.002
685ZZ\VV	5	0.1969	11	0.4331	5.0	0.1969	0.15	0.005	6.2	0.244	9.9	0.390	715	161	282	63	45000	53000	1.96	0.004
695	5	0.1969	13	0.5118	4.0	0.1575	0.20	0.007	6.6	0.260	11.4	0.449	1080	242	430	97	43000	50000	2.45	0.005
605	5	0.1969	14	0.5512	5.0	0.1969	0.20	0.007	6.6	0.260	12.4	0.488	1330	299	505	114	40000	50000	3.54	0.007
625	5	0.1969	16	0.6299	5.0	0.1969	0.30	0.011	7.0	0.276	14.0	0.551	1730	390	670	151	36000	43000	4.95	0.010
635	5	0.1969	19	0.7480	6.0	0.2362	0.30	0.011	7.0	0.276	17.0	0.669	2340	525	885	200	32000	40000	8.56	0.022
686	6	0.2362	13	0.5118	3.5	0.1378	0.15	0.005	7.2	0.283	11.8	0.465	1080	243	440	99	40000	50000	1.91	0.004
686ZZ\VV	6	0.2362	13	0.5118	5.0	0.1969	0.15	0.005	7.4	0.291	11.7	0.461	1080	243	440	99	40000	50000	2.69	0.005
696	6	0.2362	15	0.5906	5.0	0.1969	0.20	0.007	7.6	0.299	13.4	0.528	1730	390	670	151	40000	45000	3.88	0.008
606	6	0.2362	17	0.6693	6.0	0.2362	0.30	0.011	8.0	0.315	15.0	0.591	2260	510	835	188	38000	45000	5.97	0.012
626	6	0.2362	19	0.7480	6.0	0.2362	0.30	0.011	8.0	0.315	17.0	0.669	2340	525	885	200	32000	40000	8.15	0.021
687	7	0.2756	14	0.5512	3.5	0.1378	0.15	0.005	8.2	0.323	12.8	0.504	1170	264	510	115	40000	45000	2.13	0.004
687ZZ\VV	7	0.2756	14	0.5512	5.0	0.1969	0.15	0.005	8.5	0.335	12.7	0.500	1170	264	510	115	40000	45000	2.97	0.006
697	7	0.2756	17	0.6693	5.0	0.1969	0.30	0.011	9.0	0.354	15.0	0.591	1610	360	710	160	36000	43000	5.26	0.011
607	7	0.2756	19	0.7480	6.0	0.2362	0.30	0.011	9.0	0.354	17.0	0.669	2340	525	885	200	36000	43000	7.67	0.015
627	7	0.2756	22	0.8661	7.0	0.2756	0.30	0.011	9.0	0.354	20.0	0.787	3300	740	1370	310	30000	36000	12.70	0.031
608-5	8	0.3123	22	0.8661	7.0	0.2756	0.30	0.011	10.0	0.394	20.0	0.787	3300	740	1370	310	34000	40000	12.10	0.030
698	8	0.3150	19	0.7480	6.0	0.2362	0.30	0.011	10.0	0.394	17.0	0.669	2240	505	910	205	36000	43000	7.23	0.014
608	8	0.3150	22	0.8661	7.0	0.2756	0.30	0.011	10.0	0.394	20.0	0.787	3300	740	1370	310	34000	40000	12.10	0.030
628	8	0.3150	24	0.9449	8.0	0.3150	0.30	0.011	10.0	0.394	22.0	0.866	3350	755	1430	320	28000	34000	17.20	0.034
638	8	0.3150	28	1.1024	9.0	0.3543	0.30	0.011	10.0	0.394	26.0	1.024	4550	1030	1970	445	28000	34000	28.30	0.057
689	9	0.3543	17	0.6693	4.0	0.1575	0.20	0.007	10.6	0.417	15.4	0.606	1330	299	665	149	36000	43000	3.53	0.007
689ZZ\VV	9	0.3543	17	0.6693	5.0	0.1969	0.20	0.007	11.5	0.453	15.2	0.598	1330	299	665	149	36000	43000	4.43	0.009
609	9	0.3543	24	0.9449	7.0	0.2756	0.30	0.011	11.0	0.433	22.8	0.898	3350	755	1430	320	32000	38000	14.50	0.029
629	9	0.3543	26	1.0236	8.0	0.3150	0.30	0.011	11.0	0.433	24.0	0.945	4550	1030	1970	445	28000	34000	19.50	0.044

*Maximum fillet which corner radius of bearing will clear. C_r = Dynamic Radial Load Rating C_{or} = Static Radial Load Rating

Note: Limiting speeds are lower with contact seals. For more information, contact NSK.

BALL BEARINGS: 6000 SERIES

SINGLE ROW, DEEP GROOVE, CONRAD TYPE

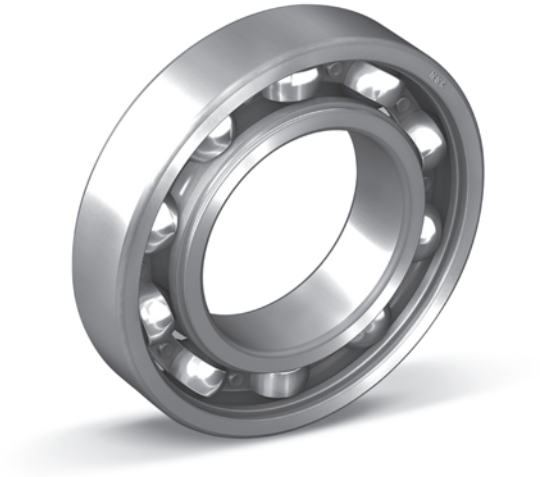

Bearing Number	Nominal Bearing Dimensions						Preferred Shoulder Diameters							
	d		D		B		r**		da				Da	
									min		max		max	
	mm	inch	mm	inch	mm	inch	mm	inch	mm	inch	mm	inch	mm	inch
6000	10	0.3937	26	1.0236	8	0.3150	0.3	0.011	12.0	0.472	13.0	0.512	24.0	0.945
6001*	12	0.4724	28	1.1024	8	0.3150	0.3	0.011	14.0	0.551	15.5	0.610	26.0	1.024
6002*	15	0.5906	32	1.2598	9	0.3543	0.3	0.011	17.0	0.669	19.0	0.748	30.0	1.181
6003*	17	0.6693	35	1.3780	10	0.3937	0.3	0.011	19.0	0.748	21.5	0.846	33.0	1.299
6004*	20	0.7874	42	1.6535	12	0.4724	0.6	0.023	24.0	0.945	25.5	1.004	38.0	1.496
6005*	25	0.9843	47	1.8504	12	0.4724	0.6	0.023	29.0	1.142	30.0	1.181	43.0	1.693
6006*	30	1.1811	55	2.1654	13	0.5118	1.0	0.039	35.0	1.378	13.5	0.531	50.0	1.969
6007*	35	1.3780	62	2.4409	14	0.5512	1.0	0.039	40.0	1.575	41.5	1.634	57.0	2.244
6008*	40	1.5748	68	2.6772	15	0.5906	1.0	0.039	45.0	1.772	47.5	1.870	63.0	2.480
6009*	45	1.7717	75	2.9528	16	0.6299	1.0	0.039	50.0	1.969	53.5	2.106	70.0	2.756
6010*	50	1.9685	80	3.1496	16	0.6299	1.0	0.039	55.0	2.165	58.5	2.303	75.0	2.953
6011*	55	2.1654	90	3.5433	18	0.7087	1.0	0.039	61.5	2.421	64.0	2.520	83.5	3.287
6012*	60	2.3622	95	3.7402	18	0.7087	1.0	0.039	66.5	2.618	69.0	2.717	88.5	3.484
6013*	65	2.5591	100	3.9370	18	0.7087	1.0	0.039	71.5	2.815	73.0	2.874	93.5	3.681
6014*	70	2.7559	110	4.3307	20	0.7874	1.0	0.039	76.5	3.012	80.5	3.169	103.5	4.075
6015*	75	2.9528	115	4.5276	20	0.7874	1.0	0.039	81.5	3.209	85.5	3.366	108.5	4.272
6016*	80	3.1496	125	4.9213	22	0.8661	1.0	0.039	86.5	3.406	91.0	3.583	118.5	4.665
6017*	85	3.3465	130	5.1181	22	0.8661	1.0	0.039	91.5	3.602	96.0	3.780	123.5	4.862
6018*	90	3.5433	140	5.5118	24	0.9449	1.5	0.059	98.0	3.858	103.0	4.055	132.0	5.197
6019*	95	3.7402	145	5.7087	24	0.9449	1.5	0.059	103.0	4.055	108.5	4.272	137.0	5.394
6020*	100	3.9370	150	5.9055	24	0.9449	1.5	0.059	108.0	4.252	112.5	4.429	142.0	5.591
6021*	105	4.1339	160	6.2992	26	1.0236	2.0	0.078	114.0	4.488	120.0	4.724	151.0	5.945
6022*	110	4.3307	170	6.6929	28	1.1024	2.0	0.078	119.0	4.685	124.5	4.902	161.0	6.339
6024*	120	4.7244	180	7.0866	28	1.1024	2.0	0.078	129.0	5.079	134.5	5.295	171.0	6.732
6026	130	5.1181	200	7.8740	33	1.2992	2.0	0.078	139.0	5.472	148.5	5.846	191.0	7.520
6028	140	5.5118	210	8.2677	33	1.2992	2.0	0.078	149.0	5.866	158.5	6.240	201.0	7.913
6030	150	5.9055	225	8.8583	35	1.3780	2.0	0.078	161.0	6.339	170.0	6.693	214.0	8.425
6032	160	6.2992	240	9.4488	38	1.4961	2.0	0.078	171.0	6.732	181.5	7.146	229.0	9.016
6034	170	6.6929	260	10.2362	42	1.6535	2.0	0.078	181.0	7.126	194.5	7.657	249.0	9.803
6036	180	7.0866	280	11.0236	46	1.8110	2.0	0.078	191.0	7.520	208.0	8.189	269.0	10.591
6038	190	7.4803	290	11.4173	46	1.8110	2.0	0.078	201.0	7.913	218.0	8.583	279.0	10.984
6040	200	7.8740	310	12.2047	51	2.0079	2.0	0.078	211.0	8.307	231.5	9.114	299.0	11.772

*Indicates NSK (HPS) High Performance Standard bearing. **Maximum fillet which corner radius of bearing will clear. Note: Limiting speeds are lower with contact seals. For more information, contact NSK.

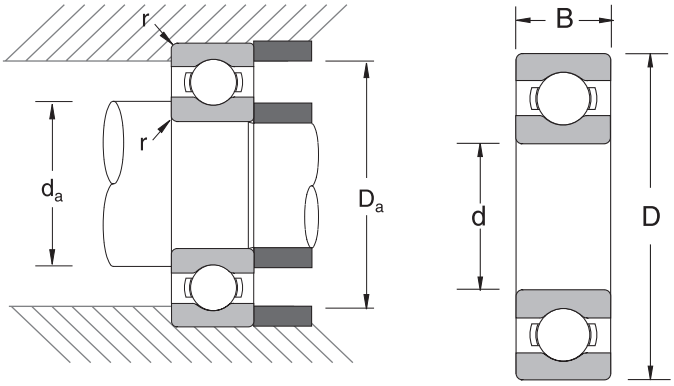

Common Options	
V	One Non-Contact Seal
VV	Two Non-Contact Seals
DU	One Contact Seal
DDU	Two Contact Seals
Z	One Shield
ZZ	Two Shields
NR	Snap Ring
M**	Brass Cage
CO*	Normal Internal Clearance
C3	Greater than Normal Internal Clearance
E	Electric Motor Quality

*Not shown in part number

** Not available on all sizes, consult NSK for availability.

Bearing Number	Basic Load Ratings				Factor	Limiting Speeds (RPM)		Bearing Weight (Approx.)	
	C_r		C_{or}						
	N	lbs	N	lbs	f_o	Grease Open/ZZ/VV	Oil	kg	lbs
6000	4550	1030	1970	445	12.4	30000	36000	0.018	0.04
6001*	5350	1200	2370	530	13.0	32000	38000	0.022	0.05
6002*	5850	1320	2840	635	13.9	26000	32000	0.031	0.07
6003*	6000	1350	3250	730	14.4	24000	28000	0.041	0.09
6004*	9850	2210	5000	1130	13.8	20000	24000	0.068	0.15
6005*	10600	2380	5850	1310	14.5	18000	22000	0.079	0.17
6006*	13900	3100	8300	1860	14.7	15000	18000	0.116	0.26
6007*	16800	3750	10300	2310	14.8	13000	15000	0.151	0.33
6008*	17600	3950	11500	2600	15.3	12000	14000	0.190	0.42
6009*	2200	4950	15200	3400	15.3	10000	12000	0.241	0.53
6010*	22900	5150	16600	3750	15.6	9500	11000	0.261	0.58
6011*	29700	6650	21200	4800	15.3	8500	10000	0.381	0.84
6012*	31000	6950	23200	5200	15.6	8000	9500	0.412	0.91
6013*	32000	7200	25200	5650	15.8	7500	9000	0.439	0.97
6014*	40000	9000	31000	6950	15.6	7100	8500	0.608	1.34
6015*	41500	9350	33500	7550	15.8	6700	8000	0.649	1.43
6016*	50000	11200	40000	8950	15.6	6000	7500	0.872	1.92
6017*	52000	11700	43000	9700	15.8	6000	7100	0.918	2.02
6018*	61000	13700	50000	11200	15.6	5300	6300	1.190	2.62
6019*	63500	14300	54000	12100	15.8	5000	6000	1.230	2.71
6020*	63000	14200	54000	12200	15.9	5000	6000	1.290	2.84
6021*	76000	17100	66000	14800	15.8	4500	5600	1.580	3.48
6022*	89000	20000	73000	16400	15.5	4500	5300	1.940	4.28
6024*	92500	20800	80000	18000	15.7	4000	5000	2.080	4.59
6026	106000	23900	101000	22700	15.8	3000	3600	3.260	7.19
6028	110000	24700	109000	24400	16.0	2800	3400	3.480	7.67
6030	126000	28300	126000	28300	15.9	2600	3000	4.240	9.35
6032	137000	30500	135000	30500	15.9	2400	2800	5.150	11.40
6034	161000	36000	161000	36000	15.8	2200	2600	6.890	15.20
6036	180000	40500	185000	41500	15.6	2000	2400	8.880	19.60
6038	188000	42500	201000	45000	15.8	2000	2400	9.390	20.70
6040	207000	46500	226000	51000	15.6	1900	2200	12.000	26.50

C_r = Dynamic Radial Load Rating C_{or} = Static Radial Load Rating

Note: Limiting speeds are lower with contact seals. For more information, contact NSK.

*Indicates NSK (HPS) High Performance Standard bearing.

BALL BEARINGS: 6200 SERIES

SINGLE ROW, DEEP GROOVE, CONRAD TYPE

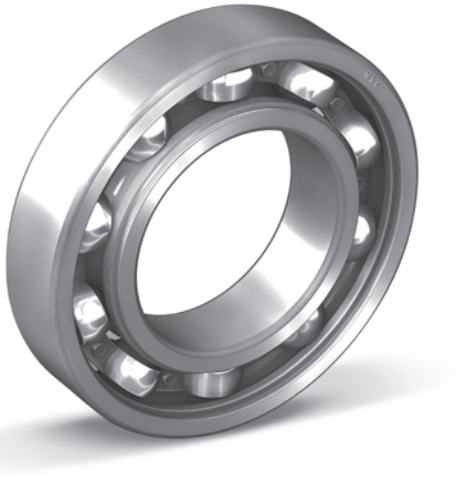

Bearing Number	Nominal Bearing Dimensions						Preferred Shoulder Diameters							
	d		D		B		r**		da				Da	
									min		max		max	
	mm	inch	mm	inch	mm	inch	mm	inch	mm	inch	mm	inch	mm	inch
6200*	10.000	0.3937	30	1.1811	9	0.3543	0.6	0.023	14.0	0.551	16.0	0.630	26.0	1.024
6201*	12.000	0.4724	32	1.2598	10	0.3937	0.6	0.023	16.0	0.630	17.0	0.669	28.0	1.102
6201-08	12.700	0.5000	32	1.2598	10	0.3937	0.6	0.023	17.0	0.669	17.0	0.669	28.0	1.102
6201-13M	13.000	0.5118	32	1.2598	10	0.3937	0.6	0.023	18.5	0.728	17.0	0.669	28.0	1.102
6202*	15.000	0.5906	35	1.3780	11	0.4331	0.6	0.023	19.0	0.748	20.5	0.807	31.0	1.220
6202-10	15.870	0.6248	35	1.3780	11	0.4331	0.6	0.023	19.0	0.748	20.5	0.807	31.0	1.220
6203-625	15.875	0.6250	40	1.5748	12	0.4724	0.6	0.023	21.0	0.827	23.5	0.925	36.0	1.417
6202-16M	16.000	0.6299	35	1.3780	11	0.4331	0.6	0.023	19.0	0.748	20.5	0.807	31.0	1.220
6203*	17.000	0.6693	40	1.5748	12	0.4724	0.6	0.023	21.0	0.827	23.5	0.925	36.0	1.417
6204*	20.000	0.7874	47	1.8504	14	0.5512	1.0	0.039	25.0	0.984	26.5	1.043	42.0	1.654
6205*	25.000	0.9843	52	2.0472	15	0.5906	1.0	0.039	30.0	1.181	32.0	1.260	47.0	1.850
6206*	30.000	1.1811	62	2.4409	16	0.6299	1.0	0.039	35.0	1.378	38.5	1.516	57.0	2.244
6207*	35.000	1.3780	72	2.8346	17	0.6693	1.0	0.039	41.5	1.634	44.5	1.752	65.5	2.579
6208*	40.000	1.5748	80	3.1496	18	0.7087	1.0	0.039	46.5	1.831	50.5	1.988	73.5	2.894
6209*	45.000	1.7717	85	3.3465	19	0.7480	1.0	0.039	51.5	2.028	55.5	2.185	78.5	3.091
6210*	50.000	1.9685	90	3.5433	20	0.7874	1.0	0.039	56.5	2.224	60.0	2.362	83.5	3.287
6211*	55.000	2.1654	100	3.9370	21	0.8268	1.5	0.059	63.0	2.480	66.5	2.618	92.0	3.622
6212*	60.000	2.3622	110	4.3307	22	0.8661	1.5	0.059	68.0	2.677	74.5	2.933	102.0	4.016
6213*	65.000	2.5591	120	4.7244	23	0.9055	1.5	0.059	73.0	2.874	80.0	3.150	112.0	4.409
6214*	70.000	2.7559	125	4.9213	24	0.9449	1.5	0.059	78.0	3.071	84.0	3.307	117.0	4.606
6215*	75.000	2.9528	130	5.1181	25	0.9843	1.5	0.059	83.0	3.268	90.0	3.543	122.0	4.803
6216*	80.000	3.1496	140	5.5118	26	1.0236	2.0	0.078	89.0	3.504	95.5	3.760	131.0	5.157
6217*	85.000	3.3465	150	5.9055	28	1.1024	2.0	0.078	94.0	3.701	102.0	4.016	141.0	5.551
6218*	90.000	3.5433	160	6.2992	30	1.1811	2.0	0.078	99.0	3.898	107.5	4.232	151.0	5.945
6219*	95.000	3.7402	170	6.6929	32	1.2598	2.0	0.078	106.0	4.173	114.0	4.488	159.0	6.260
6220*	100.000	3.9370	180	7.0866	34	1.3386	2.0	0.078	111.0	4.370	121.5	4.783	169.0	6.654
6221*	105.000	4.1339	190	7.4803	36	1.4173	2.0	0.078	116.0	4.567	127.5	5.020	179.0	7.047
6222	110.000	4.3307	200	7.8740	38	1.4961	2.0	0.078	121.0	4.764	134.0	5.276	189.0	7.441
6224	120.000	4.7244	215	8.4646	40	1.5748	2.0	0.078	131.0	5.157	146.0	5.748	204.0	8.031
6226	130.000	5.1181	230	9.0551	40	1.5748	2.5	0.098	143.0	5.630	157.0	6.181	217.0	8.543
6228	140.000	5.5118	250	9.8425	42	1.6535	2.5	0.098	153.0	6.024	171.5	6.752	237.0	9.331
6230	150.000	5.9055	270	10.6299	45	1.7717	2.5	0.098	163.0	6.417	186.0	7.323	257.0	10.118
6232	160.000	6.2992	290	11.4173	48	1.8898	2.5	0.098	173.0	6.811	202.0	7.953	277.0	10.906
6234	170.000	6.6929	310	12.2047	52	2.0472	3.0	0.118	186.0	7.323	215.0	8.465	294.0	11.575
6236	180.000	7.0866	320	12.5984	52	2.0472	3.0	0.118	196.0	7.717	223.0	8.780	304.0	11.969
6238	190.000	7.4803	340	13.3858	55	2.1654	3.0	0.118	206.0	8.110	236.0	9.291	324.0	12.756

*Indicates NSK (HPS) High Performance Standard bearing. **Maximum fillet which corner radius of bearing will clear. Note: Limiting speeds are lower with contact seals. For more information, contact NSK.

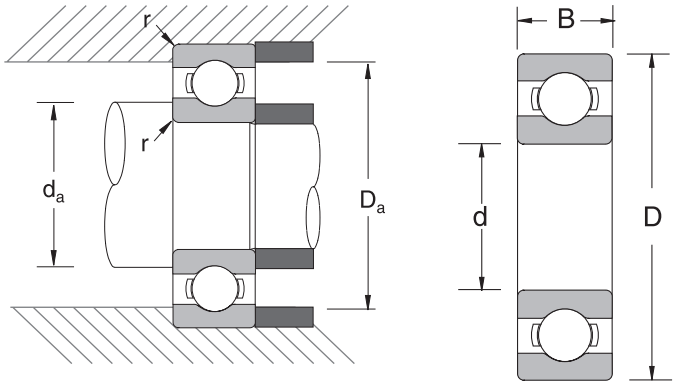

Common Options	
V	One Non-Contact Seal
VV	Two Non-Contact Seals
DU	One Contact Seal
DDU	Two Contact Seals
Z	One Shield
ZZ	Two Shields
NR	Snap Ring
M**	Brass Cage
CO*	Normal Internal Clearance
C3	Greater than Normal Internal Clearance
E	Electric Motor Quality

*Not shown in part number

** Not available on all sizes, consult NSK for availability.

Bearing Number	Basic Load Ratings				Factor	Limiting Speeds (RPM)		Bearing Weight (Approx.)	
	C_r		C_{or}						
	N	lbs	N	lbs	f_0	Grease	Oil	kg	lbs
6200*	5350	1210	2390	540	13.2	28000	34000	0.032	0.07
6201*	7150	1610	3050	685	12.3	22000	32000	0.037	0.08
6201-08	6800	1530	3050	685	12.3	22000	28000	0.037	0.08
6201-13M	6800	1530	3050	685	12.3	22000	28000	0.037	0.08
6202*	8000	1800	3750	840	13.2	22000	28000	0.045	0.10
6202-10	7650	1720	3750	840	13.2	20000	24000	0.045	0.10
6203-625	9550	2150	4800	1080	13.2	17000	20000	0.067	0.14
6202-16M	7650	1720	3750	840	13.2	20000	24000	0.045	0.10
6203*	10100	2260	4800	1080	13.2	20000	24000	0.067	0.14
6204*	13400	3000	6600	1480	13.1	17000	20000	0.107	0.23
6205*	14700	3300	7850	1770	13.9	15000	18000	0.129	0.29
6206*	20400	4600	11300	2540	13.8	12000	15000	0.199	0.44
6207*	27000	6050	15300	3450	13.8	11000	13000	0.284	0.64
6208*	30500	6850	17900	4000	14.0	9500	12000	0.366	0.82
6209*	33000	7400	20400	4600	14.4	9000	11000	0.420	0.89
6210*	37000	8300	23200	5200	14.4	8500	10000	0.459	1.02
6211*	45500	10200	29300	6600	14.3	7500	9000	0.619	1.36
6212*	55000	12400	36000	8150	14.3	6700	8000	0.783	1.73
6213*	60000	13500	40000	9000	14.4	63000	7500	1.00	2.18
6214*	65500	14700	44000	9900	14.5	6000	7100	1.09	2.31
6215*	69500	15600	49500	11100	14.7	5600	6700	1.19	2.64
6216*	76500	17200	53000	11900	14.6	5300	6300	1.42	3.09
6217*	88000	19800	62000	13900	14.5	5000	6000	1.76	3.97
6218*	101000	22700	71500	16100	14.5	4500	5600	2.18	4.74
6219*	114000	25600	82000	18400	14.4	4300	5000	2.64	5.73
6220*	128000	28800	93000	20900	14.4	4000	4800	3.17	6.94
6221*	140000	31500	105000	23500	14.4	3800	4500	3.79	8.15
6222	144000	32500	117000	26300	14.3	2800	3400	4.45	9.59
6224	155000	35000	131000	29500	14.4	2600	3200	5.29	11.4
6226	167000	37500	146000	33000	14.5	2400	3000	5.96	12.7
6228	166000	37500	150000	33500	14.9	2200	2800	7.68	19.6
6230	176000	39500	168000	37500	15.1	2000	2600	10.0	25.3
6232	185000	41500	186000	42000	15.4	1900	2400	12.8	28.2
6234	212000	47500	224000	50500	15.3	1800	2200	15.8	34.3
6236	227000	51000	241000	54000	15.1	1700	2000	15.9	34.8
6238	255000	57500	282000	63500	15.0	1600	2000	22.3	48.8

C_r = Dynamic Radial Load Rating C_{or} = Static Radial Load Rating

Note: Limiting speeds are lower with contact seals. For more information, contact NSK.

*Indicates NSK (HPS) High Performance Standard bearing.

BALL BEARINGS: 6300 SERIES

SINGLE ROW, DEEP GROOVE, CONRAD TYPE

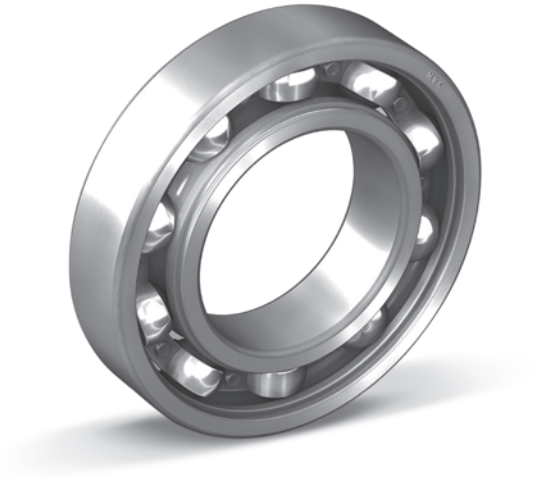

Bearing Number	Nominal Bearing Dimensions						Preferred Shoulder Diameters							
	d		D		B		r**		da/db				Da	
									min		max		max	
	mm	inch	mm	inch	mm	inch	mm	inch	mm	inch	mm	inch	mm	inch
6300*	10	0.3937	35	1.3780	11	0.4331	0.6	0.023	14.0	0.551	16.5	0.650	31.0	1.220
6301*	12	0.4724	37	1.4567	12	0.4724	1.0	0.039	17.0	0.669	18.0	0.709	32.0	1.260
6302*	15	0.5906	42	1.6535	13	0.5118	1.0	0.039	20.0	0.787	22.5	0.886	37.0	1.457
6303*	17	0.6693	47	1.8504	14	0.5512	1.0	0.039	22.0	0.866	25.5	1.004	42.0	1.654
6304*	20	0.7874	52	2.0472	15	0.5906	1.1	0.043	26.5	1.043	28.0	1.102	45.5	1.791
6305*	25	0.9843	62	2.4409	17	0.6693	1.1	0.043	31.5	1.240	36.0	1.417	55.5	2.185
6306*	30	1.1811	72	2.8346	19	0.7480	1.1	0.043	36.5	1.437	42.5	1.673	65.5	2.579
6307*	35	1.3780	80	3.1496	21	0.8268	1.5	0.059	43.0	1.693	47.0	1.850	72.0	2.835
6308*	40	1.5748	90	3.5433	23	0.9055	1.5	0.059	48.0	1.890	53.0	2.087	82.0	3.228
6309*	45	1.7717	100	3.9370	25	0.9843	1.5	0.059	53.0	2.087	61.5	2.421	92.0	3.622
6310*	50	1.9685	110	4.3307	27	1.0630	2.0	0.078	59.0	2.323	68.0	2.677	101.0	3.976
6311*	55	2.1654	120	4.7244	29	1.1417	2.0	0.078	64.0	2.520	72.5	2.854	111.0	4.370
6312*	60	2.3622	130	5.1181	31	1.2205	2.1	0.082	71.0	2.795	79.0	3.110	119.0	4.685
6313*	65	2.5591	140	5.5118	33	1.2992	2.1	0.082	76.0	2.992	85.5	3.366	129.0	5.079
6314*	70	2.7559	150	5.9055	35	1.3780	2.1	0.082	81.0	3.189	92.0	3.622	139.0	5.472
6315*	75	2.9528	160	6.2992	37	1.4567	2.1	0.082	86.0	3.386	98.5	3.878	149.0	5.866
6316*	80	3.1496	170	6.6929	39	1.5354	2.1	0.082	91.0	3.583	104.5	4.114	159.0	6.260
6317*	85	3.3465	180	7.0866	41	1.6142	3.0	0.118	98.0	3.858	110.5	4.350	167.0	6.575
6318*	90	3.5433	190	7.4803	43	1.6929	3.0	0.118	103.0	4.055	117.0	4.606	177.0	6.969
6319*	95	3.7402	200	7.8740	45	1.7717	3.0	0.118	108.0	4.252	123.5	4.862	187.0	7.362
6320	100	3.9370	215	8.4646	47	1.8504	3.0	0.118	113.0	4.449	133.0	5.236	202.0	7.953
6321	105	4.1339	225	8.8583	49	1.9291	3.0	0.118	118.0	4.646	138.0	5.433	212.0	8.346
6322	110	4.3307	240	9.4488	50	1.9685	3.0	0.118	123.0	4.843	147.0	5.787	227.0	8.937
6324	120	4.7244	260	10.2362	55	2.1654	3.0	0.118	133.0	5.236	161.0	6.339	247.0	9.724
6326	130	5.1181	280	11.0236	58	2.2835	4.0	0.157	146.0	5.748	175.0	6.890	264.0	10.394
6328	140	5.5118	300	11.8110	62	2.4409	4.0	0.157	156.0	6.142	187.0	7.362	284.0	11.181
6330	150	5.9055	320	12.5984	65	2.5591	4.0	0.157	166.0	6.535	203.0	7.992	304.0	11.969
6332	160	6.2992	340	13.3858	68	2.6772	4.0	0.157	176.0	6.929	215.5	8.484	324.0	12.756
6334	170	6.6929	360	14.1732	72	2.8346	4.0	0.157	186.0	7.323	-	-	344.0	-
6336	180	7.0866	380	14.9606	75	2.9528	4.0	0.157	196.0	7.717	-	-	364.0	-
6338	190	7.4803	400	15.7480	78	3.0709	5.0	0.196	210.0	8.268	-	-	380.0	-
6340	200	7.8740	420	16.5354	80	3.1496	5.0	0.196	220.0	8.661	-	-	400.0	-

*Indicates NSK (HPS) High Performance Standard bearing. **Maximum fillet which corner radius of bearing will clear. Note: Limiting speeds are lower with contact seals. For more information, contact NSK.

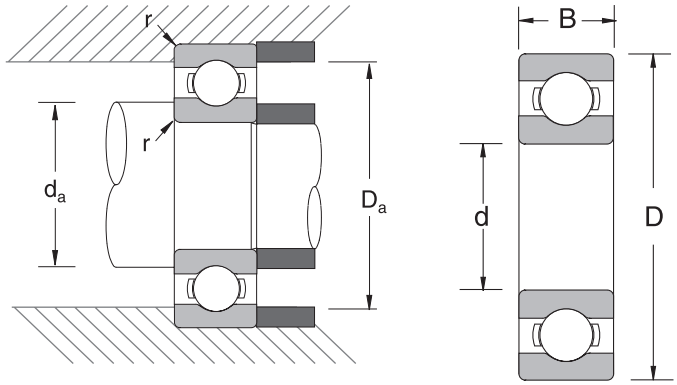

Common Options	
V	One Non-Contact Seal
VV	Two Non-Contact Seals
DU	One Contact Seal
DDU	Two Contact Seals
Z	One Shield
ZZ	Two Shields
NR	Snap Ring
M**	Brass Cage
CO*	Normal Internal Clearance
C3	Greater than Normal Internal Clearance
E	Electric Motor Quality

*Not shown in part number

** Not available on all sizes, consult NSK for availability.

Bearing Number	Basic Load Ratings				Factor	Limiting Speeds (RPM)		Bearing Weight (Approx.)	
	C_r		C_{or}						
	N	lbs	N	lbs	f_0	Grease	Oil	kg	lbs
6300*	8500	1910	3450	770	11.2	26000	30000	0.052	0.12
6301*	10200	2290	4200	940	11.1	24000	28000	0.060	0.13
6302*	12000	2700	5450	1220	12.3	20000	24000	0.083	0.18
6303*	14300	3200	6650	1490	12.4	18000	20000	0.113	0.25
6304*	16700	3750	7900	1770	12.4	16000	19000	0.145	0.32
6305*	21600	4850	11200	2530	13.2	13000	16000	0.235	0.52
6306*	28000	6300	15000	3400	13.3	11000	13000	0.345	0.76
6307*	35000	7850	19200	4300	13.2	10000	12000	0.464	1.01
6308*	43000	9600	24000	5400	13.2	9000	11000	0.636	1.40
6309*	55500	12500	32000	7200	13.1	8000	9500	0.829	1.84
6310*	65000	14600	38500	8600	13.2	7100	8500	1.06	2.42
6311*	75000	16900	44500	10000	13.1	6700	8000	1.37	2.98
6312*	86000	19300	52000	11700	13.1	6000	7100	1.72	3.75
6313*	97500	21900	60000	13400	13.2	5600	6700	2.11	4.63
6314*	109000	24600	68000	15300	13.2	5300	6300	2.57	5.51
6315*	119000	26800	77000	17400	13.2	5000	6000	3.08	6.61
6316*	129000	29000	86500	19500	13.3	4500	5600	3.67	7.93
6317*	139000	31500	97000	21800	13.3	4300	5000	4.28	9.37
6318*	150000	33500	107000	24100	13.3	4000	4800	4.98	10.8
6319*	160000	36000	119000	26700	13.3	3400	4300	5.76	12.5
6320	173000	39000	141000	32000	13.2	2800	3400	7.04	15.3
6321	184000	41500	154000	34500	13.2	2600	3200	8.09	17.9
6322	205000	46000	179000	40500	13.2	2400	3000	9.51	21.0
6324	207000	46500	185000	41500	13.5	2200	2800	12.5	27.6
6326	229000	51500	214000	48000	13.6	2200	2600	15.2	40.8
6328	253000	57000	246000	55500	13.6	2000	2400	18.5	48.5
6330	274000	61500	284000	63500	13.9	1800	2200	22.7	57.3
6332	278000	62500	287000	64500	13.9	1700	2000	26.2	58.0
6334	325000	73500	355000	80000	13.6	1600	2000	36.6	84.0
6336	355000	79500	405000	91500	13.9	1500	1800	43.1	98.0
6338	355000	79500	415000	93000	14.1	1400	1700	49.7	112.0
6340	380000	85500	445000	100000	13.8	1300	1600	55.3	127.0

C_r = Dynamic Radial Load Rating C_{or} = Static Radial Load Rating

Note: Limiting speeds are lower with contact seals. For more information, contact NSK.

*Indicates NSK (HPS) High Performance Standard bearing.

BALL BEARINGS: 6800 SERIES

SINGLE ROW, DEEP GROOVE, CONRAD TYPE

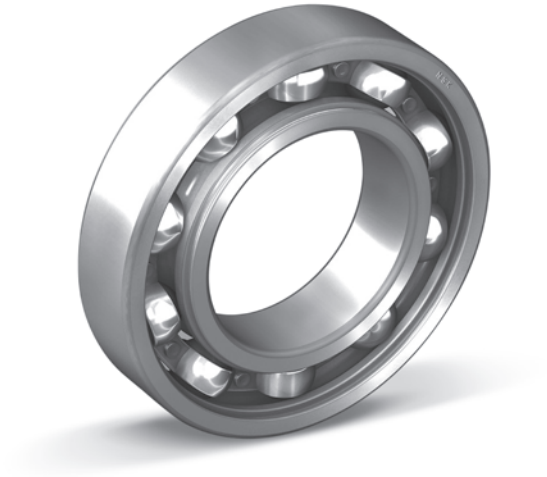

Bearing Number	Nominal Bearing Dimensions						Preferred Shoulder Diameters							
	d		D		B		r*		da				Da	
									min		max		max	
	mm	inch	mm	inch	mm	inch	mm	inch	mm	inch	mm	inch	mm	inch
6800	10	0.3937	19	0.7480	5	0.1969	0.3	0.011	12.0	0.472	12.0	0.472	17.0	0.669
6801	12	0.4724	21	0.8268	5	0.1969	0.3	0.011	14.0	0.551	14.0	0.551	19.0	0.748
6802	15	0.5906	24	0.9449	5	0.1969	0.3	0.011	17.0	0.669	17.0	0.669	22.0	0.866
6803	17	0.6693	26	1.0236	5	0.1969	0.3	0.011	19.0	0.748	19.0	0.748	24.0	0.945
6804	20	0.7874	32	1.2598	7	0.2756	0.3	0.011	22.0	0.866	22.0	0.866	30.0	1.181
6805	25	0.9843	37	1.4567	7	0.2756	0.3	0.011	27.0	1.063	27.0	1.063	35.0	1.378
6806	30	1.1811	42	1.6535	7	0.2756	0.3	0.011	32.0	1.260	32.0	1.260	40.0	1.575
6807	35	1.3780	47	1.8504	7	0.2756	0.3	0.011	37.0	1.457	37.0	1.457	45.0	1.772
6808	40	1.5748	52	2.0472	7	0.2756	0.3	0.011	42.0	1.654	42.0	1.654	50.0	1.969
6809	45	1.7717	58	2.2835	7	0.2756	0.3	0.011	47.0	1.850	47.5	1.870	56.0	2.205
6810	50	1.9685	65	2.5591	7	0.2756	0.3	0.011	52.0	2.047	52.5	2.067	63.0	2.480
6811	55	2.1654	72	2.8346	9	0.3543	0.3	0.011	57.0	2.244	59.0	2.323	70.0	2.756
6812	60	2.3622	78	3.0709	10	0.3937	0.3	0.011	62.0	2.441	64.0	2.520	76.0	2.992
6813	65	2.5591	85	3.3465	10	0.3937	0.6	0.023	69.0	2.717	69.0	2.717	81.0	3.189
6814	70	2.7559	90	3.5433	10	0.3937	0.6	0.023	74.0	2.913	74.5	2.933	86.0	3.386
6815	75	2.9528	95	3.7402	10	0.3937	0.6	0.023	79.0	3.110	79.5	3.130	91.0	3.583
6816	80	3.1496	100	3.9370	10	0.3937	0.6	0.023	84.0	3.307	84.5	3.327	96.0	3.780
6817	85	3.3465	110	4.3307	13	0.5118	1.0	0.039	90.0	3.543	90.5	3.563	105.0	4.134
6818	90	3.5433	115	4.5276	13	0.5118	1.0	0.039	95.0	3.740	95.5	3.760	110.0	4.331
6819	95	3.7402	120	4.7244	13	0.5118	1.0	0.039	100.0	3.937	101.5	3.996	115.0	4.528
6820	100	3.9370	125	4.9213	13	0.5118	1.0	0.039	105.0	4.134	105.5	4.154	120.0	4.724
6821	105	4.1339	130	5.1181	13	0.5118	1.0	0.039	110.0	4.331	110.5	4.350	125.0	4.921
6822	110	4.3307	140	5.5118	16	0.6299	1.0	0.039	115.0	4.528	117.0	4.606	135.0	5.315
6824	120	4.7244	150	5.9055	16	0.6299	1.0	0.039	125.0	4.921	127.0	5.000	145.0	5.709
6826	130	5.1181	165	6.4961	18	0.7087	1.1	0.043	136.5	5.374	138.0	5.433	158.5	6.240
6828	140	5.5118	175	6.8898	18	0.7087	1.1	0.043	146.5	5.768	148.0	5.827	168.5	6.634
6830	150	5.9055	190	7.4803	20	0.7874	1.1	0.043	156.5	6.161	160.0	6.299	183.5	7.224
6832	160	6.2992	200	7.8740	20	0.7874	1.1	0.043	166.5	6.555	170.5	6.713	193.5	7.618
6834	170	6.6929	215	8.4646	22	0.8661	1.1	0.043	176.5	6.949	182.0	7.165	208.5	8.209
6836	180	7.0866	225	8.8583	22	0.8661	1.1	0.043	186.5	7.343	192.0	7.559	218.5	8.602
6838	190	7.4803	240	9.4488	24	0.9449	1.5	0.059	198.0	7.795	202.5	7.972	232.0	9.134
6840	200	7.8740	250	9.8425	24	0.9449	1.5	0.059	208.0	8.189	-	-	242.0	9.528

*Maximum fillet which corner radius of bearing will clear.

Note: Limiting speeds are lower with contact seals. For more information, contact NSK.

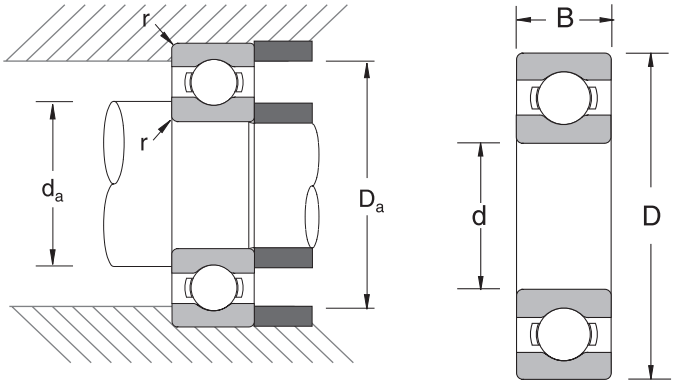

Common Options	
V	One Non-Contact Seal
VV	Two Non-Contact Seals
DU	One Contact Seal
DDU	Two Contact Seals
Z	One Shield
ZZ	Two Shields
NR	Snap Ring
M**	Brass Cage
CO*	Normal Internal Clearance
C3	Greater than Normal Internal Clearance
E	Electric Motor Quality

*Not shown in part number

** Not available on all sizes, consult NSK for availability.

Bearing Number	Basic Load Ratings				Factor	Limiting Speeds (RPM)		Bearing Weight (Approx.)	
	C_r		C_{or}						
	N	lbs	N	lbs	f_o	Grease	Oil	kg	lbs
6800	1720	385	840	189	14.8	34000	40000	0.005	0.01
6801	1920	430	1040	234	15.3	32000	38000	0.006	0.01
6802	2080	465	1260	283	15.8	28000	34000	0.007	0.02
6803	2630	590	1570	355	15.7	26000	30000	0.007	0.02
6804	4000	905	2470	555	15.5	22000	26000	0.017	0.04
6805	4500	1010	3150	705	16.1	18000	22000	0.021	0.05
6806	4700	1060	3650	815	16.4	15000	18000	0.024	0.05
6807	4900	1100	4100	920	16.7	14000	16000	0.027	0.06
6808	6350	1430	5550	1240	17.0	12000	14000	0.031	0.07
6809	6600	1480	6150	1380	17.2	11000	13000	0.038	0.08
6810	6400	1440	6200	1400	17.2	9500	11000	0.050	0.11
6811	8800	1980	8500	1910	17.0	8500	10000	0.081	0.18
6812	11500	2580	10900	2460	16.9	8000	9500	0.103	0.22
6813	11900	2680	12100	2720	17.0	7500	8500	0.128	0.28
6814	12100	2720	12700	2860	17.2	6700	8000	0.134	0.29
6815	12500	2820	13900	3100	17.3	6300	7500	0.149	0.32
6816	12700	2850	14500	3250	17.4	6000	7100	0.151	0.32
6817	18700	4200	20000	4500	17.1	5600	6700	0.263	0.56
6818	19000	4250	21000	4700	17.2	5300	6300	0.276	0.59
6819	19300	4350	22000	4950	17.2	5000	6000	0.297	0.63
6820	19600	4400	23000	5150	17.3	4800	5600	0.310	0.66
6821	19800	4450	23900	5400	17.4	4800	5600	0.324	0.69
6822	28100	6300	32500	7350	17.1	4300	5300	0.497	1.07
6824	28900	6500	35500	8000	17.3	4000	4800	0.537	1.16
6826	37000	8300	44000	9850	17.1	3600	4300	0.758	1.63
6828	38500	8600	48000	10700	17.3	3400	4000	0.832	1.79
6830	47500	10700	58500	13100	17.1	3200	3800	1.15	2.49
6832	48500	10900	61000	13700	17.2	2600	3200	1.23	3.08
6834	60000	13400	75000	16800	17.1	2600	3000	1.86	4.11
6836	60500	13600	78500	17600	17.2	2400	2800	1.98	4.36
6838	73000	16400	93500	21000	17.1	2200	2600	2.53	5.57
6840	74000	16700	98000	22000	17.2	2200	2600	2.67	5.85

C_r = Dynamic Radial Load Rating C_{or} = Static Radial Load Rating

Note: Limiting speeds are lower with contact seals. For more information, contact NSK.

BALL BEARINGS: 6900 SERIES

SINGLE ROW, DEEP GROOVE, CONRAD TYPE

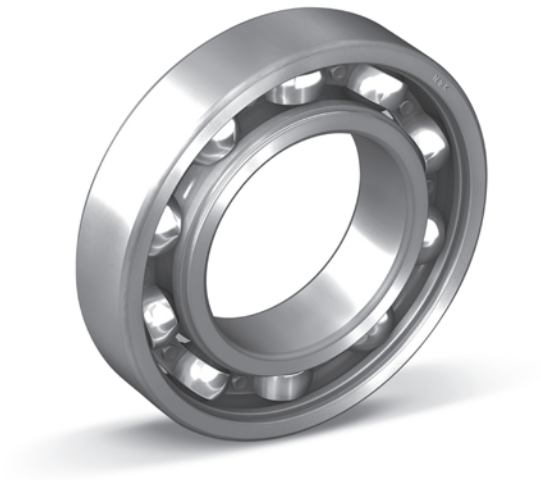

Bearing Number	Nominal Bearing Dimensions						Preferred Shoulder Diameters							
	d		D		B		r*		da				Da	
									min		max		max	
	mm	inch	mm	inch	mm	inch	mm	inch	mm	inch	mm	inch	mm	inch
6900	10	0.3937	22	0.8661	6	0.2362	0.3	0.012	12.0	0.472	12.5	0.492	20.0	0.787
6901	12	0.4724	24	0.9449	6	0.2362	0.3	0.012	14.0	0.551	14.5	0.571	22.0	0.866
6902	15	0.5906	28	1.1024	7	0.2756	0.3	0.012	17.0	0.669	17.0	0.669	26.0	1.024
6903	17	0.6693	30	1.1811	7	0.2756	0.3	0.012	19.0	0.748	19.5	0.768	28.0	1.102
6904	20	0.7874	37	1.4567	9	0.3543	0.3	0.012	22.0	0.866	24.0	0.945	35.0	1.378
6905	25	0.9843	42	1.6535	9	0.3543	0.3	0.012	27.0	1.063	28.5	1.122	40.0	1.575
6906	30	1.1811	47	1.8504	9	0.3543	0.3	0.012	32.0	1.260	34.0	1.339	45.0	1.772
6907	35	1.3780	55	2.1654	10	0.3937	0.6	0.024	39.0	1.535	39.0	1.535	51.0	2.008
6908	40	1.5748	62	2.4409	12	0.4724	0.6	0.024	44.0	1.732	46.0	1.811	58.0	2.283
6909	45	1.7717	68	2.6772	12	0.4724	0.6	0.024	49.0	1.929	50.0	1.969	64.0	2.520
6910	50	1.9685	72	2.8346	12	0.4724	0.6	0.024	54.0	2.126	55.0	2.165	68.0	2.677
6911	55	2.1654	80	3.1496	13	0.5118	1.0	0.039	60.0	2.362	61.5	2.421	75.0	2.953
6912	60	2.3622	85	3.3465	13	0.5118	1.0	0.039	65.0	2.559	66.0	2.598	80.0	3.150
6913	65	2.5591	90	3.5433	13	0.5118	1.0	0.039	70.0	2.756	71.5	2.815	85.0	3.346
6914	70	2.7559	100	3.9370	16	0.6299	1.0	0.039	75.0	2.953	77.5	3.051	95.0	3.740
6915	75	2.9528	105	4.1339	16	0.6299	1.0	0.039	80.0	3.150	82.0	3.228	100.0	3.937
6916	80	3.1496	110	4.3307	16	0.6299	1.0	0.039	85.0	3.346	87.5	3.445	105.0	4.134
6917	85	3.3465	120	4.7244	18	0.7087	1.0	0.039	91.5	3.602	94.5	3.720	113.5	4.469
6918	90	3.5433	125	4.9213	18	0.7087	1.0	0.039	96.5	3.799	98.5	3.878	118.5	4.665
6919	95	3.7402	130	5.1181	18	0.7087	1.0	0.039	101.5	3.996	103.5	4.075	123.5	4.862
6920	100	3.9370	140	5.5118	20	0.7874	1.0	0.039	106.5	4.193	111.0	4.370	133.5	5.256
6921	105	4.1339	145	5.7087	20	0.7874	1.0	0.039	111.5	4.390	116.0	4.567	138.5	5.453
6922	110	4.3307	150	5.9055	20	0.7874	1.0	0.039	116.5	4.587	121.0	4.764	143.5	5.650
6924	120	4.7244	165	6.4961	22	0.8661	1.0	0.039	126.5	4.980	132.0	5.197	158.5	6.240
6926	130	5.1181	180	7.0866	24	0.9449	1.5	0.059	138.0	5.433	144.0	5.669	172.0	6.772
6928	140	5.5118	190	7.4803	24	0.9449	1.5	0.059	148.0	5.827	153.5	6.043	182.0	7.165
6930	150	5.9055	210	8.2677	28	1.1024	2.0	0.079	159.0	6.260	166.0	6.535	201.0	7.913
6932	160	6.2992	220	8.6614	28	1.1024	2.0	0.079	169.0	6.654	176.0	6.929	211.0	8.307
6934	170	6.6929	230	9.0551	28	1.1024	2.0	0.079	179.0	7.047	186.0	7.323	221.0	8.701
6936	180	7.0866	250	9.8425	33	1.2992	2.0	0.079	189.0	7.441	198.5	7.815	241.0	9.488
6938	190	7.4803	260	10.2362	33	1.2992	2.0	0.079	199.0	7.835	--	--	251.0	9.882
6940	200	7.8740	280	11.0236	38	1.4961	2.0	0.079	211.0	8.307	222.0	8.740	269.0	10.591

*Maximum fillet which corner radius of bearing will clear. Note: Limiting speeds are lower with contact seals. For more information, contact NSK.

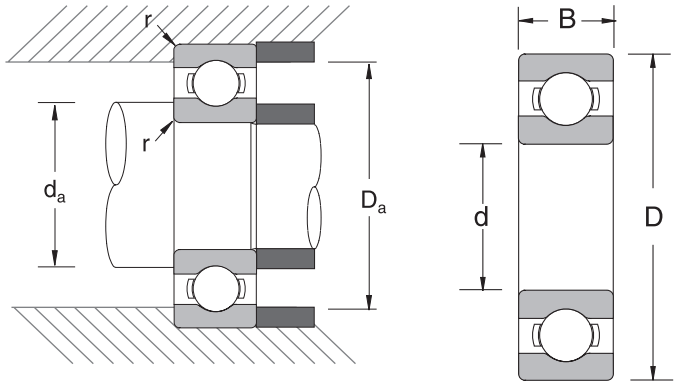

Common Options	
V	One Non-Contact Seal
VV	Two Non-Contact Seals
DU	One Contact Seal
DDU	Two Contact Seals
Z	One Shield
ZZ	Two Shields
NR	Snap Ring
M**	Brass Cage
CO*	Normal Internal Clearance
C3	Greater than Normal Internal Clearance
E	Electric Motor Quality

*Not shown in part number

** Not available on all sizes, consult NSK for availability.

Bearing Number	Basic Load Ratings				Factor	Limiting Speeds (RPM)		Bearing Weight (Approx.)	
	C_r		C_{or}						
	N	lbs	N	lbs	f_0	Grease	Oil	kg	lbs
6900	2700	605	1270	285	14.0	32000	38000	0.009	0.02
6901	2890	650	1460	330	14.5	30000	36000	0.010	0.02
6902	4350	975	2260	505	14.3	26000	30000	0.015	0.03
6903	4600	1030	2550	575	14.7	24000	28000	0.017	0.04
6904	6400	1430	3700	825	14.7	19000	22000	0.037	0.08
6905	7050	1580	4550	1020	15.4	16000	19000	0.042	0.09
6906	7250	1630	5000	1130	15.8	14000	17000	0.052	0.11
6907	10600	2380	7250	1630	15.5	12000	15000	0.075	0.17
6908	13700	3050	10000	2240	15.7	11000	13000	0.112	0.25
6909	14100	3150	10900	2440	15.9	9500	12000	0.126	0.28
6910	14500	3250	11700	2640	16.1	9000	11000	0.135	0.30
6911	16000	3600	13300	2980	16.2	8000	9500	0.189	0.42
6912	19400	4350	16300	3650	16.2	7500	9000	0.192	0.42
6913	17400	3900	16100	3600	16.6	7100	8500	0.218	0.48
6914	23700	5350	21200	4750	16.3	6300	7500	0.349	0.77
6915	24400	5500	22600	5100	16.5	6000	7100	0.364	0.80
6916	25000	5600	24000	5400	16.6	5600	6700	0.391	0.86
6917	32000	7200	29600	6650	16.4	5300	6300	0.550	1.21
6918	33000	7400	31500	7100	16.5	5000	6000	0.585	1.29
6919	33500	7600	33500	7550	16.6	4800	5600	0.601	1.32
6920	43000	9600	42000	9400	16.4	4500	5300	0.828	1.83
6921	42500	9550	42000	9450	16.5	4300	5300	0.856	1.89
6922	43500	9800	44500	10100	16.6	4300	5000	0.893	1.97
6924	53000	11900	54000	12200	16.5	3800	4500	1.21	2.67
6926	65000	14700	67500	15200	16.5	3400	4000	1.57	3.46
6928	66500	15000	72000	16100	16.6	3200	3800	1.67	3.68
6930	85000	19100	90500	20300	16.5	2600	3200	3.01	6.64
6932	87000	19500	96000	21600	16.6	2600	3000	2.71	5.97
6934	86000	19300	97000	21800	16.7	2400	2800	3.34	7.36
6936	119000	26700	128000	28800	16.4	2200	2600	4.16	9.17
6938	113000	25400	127000	28500	16.6	2200	2600	5.18	11.4
6940	143000	32100	158000	35500	16.4	2000	2400	7.28	16.0

C_r = Dynamic Radial Load Rating C_{or} = Static Radial Load Rating

Note: Limiting speeds are lower with contact seals. For more information, contact NSK.

BALL BEARINGS: 63200 SERIES

SINGLE ROW, DEEP GROOVE, CARTRIDGE

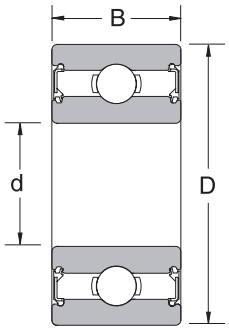

Bearing Number	Nominal Bearing Dimensions						Preferred Shoulder Diameters						Basic Load Ratings				Limiting Speeds (RPM)	Bearing Weight (Approx.)	
	d		D		B		r*		Shaft		Housing		C_r		C_{or}				
	mm	inch	mm	inch	mm	inch	mm	inch	mm	inch	mm	inch	N	lbs	N	lbs	Grease	kg	lbs
63204DDU	20	0.7874	47	1.8504	20.6	0.8110	1.0	0.039	24.6	0.969	41.0	1.614	12800	2880	6600	1480	11000	0.154	0.34
63205DDU	25	0.9842	52	2.0472	20.6	0.8110	1.0	0.039	29.8	1.172	46.0	1.811	14000	3150	7850	1770	9000	0.177	0.39
63206DDU	30	1.1811	62	2.4409	23.8	0.9370	1.0	0.039	35.7	1.406	56.0	2.205	19500	4400	11300	2540	7500	0.435	0.96
63207DDU	35	1.3779	72	2.8346	27.0	1.0630	1.0	0.039	41.0	1.614	65.0	2.559	25700	5750	15300	3450	6300	0.435	0.96
63208DDU	40	1.5748	80	3.1496	30.2	1.1890	1.0	0.039	46.0	1.811	73.0	2.874	29100	6550	17900	4000	5600	0.581	1.28
63209DDU	45	1.7716	85	3.3464	30.2	1.1890	1.0	0.039	51.0	2.008	78.0	3.071	31500	7050	20400	4600	5300	0.621	1.37

*Maximum fillet which corner radius of bearing will clear. C_r = Dynamic Radial Load Rating C_{or} = Static Radial Load Rating

BALL BEARINGS: 63300 SERIES

SINGLE ROW, DEEP GROOVE, CARTRIDGE

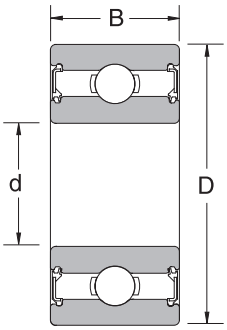

Bearing Number	Nominal Bearing Dimensions						Preferred Shoulder Diameters						Basic Load Ratings				Limiting Speeds (RPM)	Bearing Weight (Approx.)	
	d		D		B		r*		Shaft		Housing		C_r		C_{or}				
	mm	inch	mm	inch	mm	inch	mm	inch	mm	inch	mm	inch	N	lbs	N	lbs	Grease	kg	lbs
63304DDU	20	0.7874	52	2.0472	22.2	0.8740	1.0	0.039	25.8	1.016	45.0	1.772	15900	3600	7900	1770	10000	0.200	0.44
63305DDU	25	0.9843	62	2.4409	25.4	1.0000	1.0	0.039	31.0	1.220	55.0	2.165	20600	4650	11200	2530	8000	0.354	0.78
63306DDU	30	1.1811	72	2.8346	30.2	1.1890	1.0	0.039	37.3	1.469	65.0	2.559	26700	6000	15000	3400	6700	0.513	1.13
63307DDU	35	1.3780	80	3.1496	34.9	1.3740	1.5	0.059	42.9	1.688	71.0	2.795	33500	7500	19200	4300	6000	0.744	1.64
63308DDU	40	1.5748	90	3.5433	36.5	1.4370	1.5	0.059	49.0	1.929	81.0	3.189	40500	9150	24000	5400	5300	0.934	2.06
63309DDU	45	1.7717	100	3.9370	39.7	1.5630	1.5	0.059	54.0	2.126	91.0	3.583	53000	11900	32000	7200	4800	1.36	3.00
63310DDU	50	1.9685	110	4.3307	44.4	1.7480	2.0	0.079	60.0	2.362	100.0	3.937	62000	13900	38500	8600	4300	1.70	3.75
63311DDU	55	2.1654	120	4.7244	49.2	1.9370	2.0	0.079	65.0	2.559	110.0	4.331	71500	16100	44500	10000	4000	2.32	5.12
63312DDU	60	2.3622	130	5.1181	54.0	2.1260	2.0	0.079	72.0	2.835	118.0	4.646	82000	18400	52000	11700	3600	2.95	6.50

*Maximum fillet which corner radius of bearing will clear. C_r = Dynamic Radial Load Rating C_{or} = Static Radial Load Rating

BALL BEARINGS: BL200/300 SERIES

MAXIMUM CAPACITY TYPE

Bearing Number	Nominal Bearing Dimensions						Preferred Shoulder Diameters							
	d		D		B		r*		da/db				Da	
									min		max		max	
	mm	inch	mm	inch	mm	inch	mm	inch	mm	inch	mm	inch	mm	inch
BL205	25	0.9843	52	2.0472	15	0.5906	1.0	0.039	30.0	1.181	32.0	1.260	47.0	1.850
BL305	25	0.9843	62	2.4409	17	0.6693	1.0	0.039	31.5	1.240	36.0	1.417	55.5	2.185
BL206	30	1.1811	62	2.4409	16	0.6299	1.0	0.039	35.0	1.378	38.5	1.516	57.0	2.244
BL306	30	1.1811	72	2.8346	19	0.7480	1.0	0.039	36.5	1.437	42.0	1.654	65.5	2.579
BL207	35	1.3780	72	2.8346	17	0.6693	1.0	0.039	41.5	1.634	44.5	1.752	65.5	2.579
BL307	35	1.3780	80	3.1496	21	0.8268	1.5	0.059	43.0	1.693	44.5	1.752	72.0	2.835
BL208	40	1.5748	80	3.1496	18	0.7087	1.0	0.039	46.5	1.831	50.0	1.969	73.5	2.894
BL308	40	1.5748	90	3.5433	23	0.9055	1.5	0.059	48.0	1.890	52.5	2.067	82.0	3.228
BL209	45	1.7717	85	3.3465	19	0.7480	1.0	0.039	51.5	2.028	55.5	2.185	78.5	3.091
BL309	45	1.7717	100	3.9370	25	0.9843	1.5	0.059	53.0	2.087	61.5	2.421	92.0	3.622
BL210	50	1.9685	90	3.5433	20	0.7874	1.0	0.039	56.5	2.224	60.0	2.362	83.5	3.287
BL310	50	1.9685	110	4.3307	27	1.0630	2.0	0.078	59.0	2.323	68.0	2.677	101.0	3.976
BL211	55	2.1654	100	3.9370	21	0.8268	1.5	0.059	63.0	2.480	66.5	2.618	92.0	3.622
BL311	55	2.1654	120	4.7244	29	1.1417	2.0	0.078	64.0	2.520	72.5	2.854	111.0	4.370
BL212	60	2.3622	110	4.3307	22	0.8661	1.5	0.059	68.0	2.677	74.5	2.933	102.0	4.016
BL312	60	2.3622	130	5.1181	31	1.2205	2.0	0.078	71.0	2.795	79.0	3.110	119.0	4.685
BL213	65	2.5591	120	4.7244	23	0.9055	1.5	0.059	73.0	2.874	80.0	3.150	112.0	4.409
BL313	65	2.5591	140	5.5118	33	1.2992	2.0	0.078	76.0	2.992	85.5	3.366	129.0	5.079
BL214	70	2.7559	125	4.9213	24	0.9449	1.5	0.059	78.0	3.071	84.0	3.307	117.0	4.606
BL314	70	2.7559	150	5.9055	35	1.3780	2.0	0.078	81.0	3.189	92.0	3.622	139.0	5.472
BL215	75	2.9528	130	5.1181	25	0.9843	1.5	0.059	83.0	3.268	90.0	3.543	122.0	4.803
BL315	75	2.9528	160	6.2992	37	1.4567	2.0	0.078	86.0	3.386	98.5	3.878	149.0	5.866
BL216	80	3.1496	140	5.5118	26	1.0236	2.0	0.078	89.0	3.504	95.5	3.760	131.0	5.157
BL316	80	3.1496	170	6.6929	39	1.5354	2.0	0.078	91.0	3.583	104.5	4.114	159.0	6.260
BL217	85	3.3465	150	5.9055	28	1.1024	2.0	0.078	94.0	3.701	102.0	4.016	141.0	5.551
BL317	85	3.3465	180	7.0866	41	1.6142	2.5	0.098	98.0	3.858	110.5	4.350	167.0	6.575
BL218	90	3.5433	160	6.2992	30	1.1811	2.0	0.078	99.0	3.898	107.5	4.232	151.0	5.945
BL318	90	3.5433	190	7.4803	43	1.6929	2.5	0.098	103.0	4.055	117.0	4.606	177.0	6.969
BL219	95	3.7402	170	6.6929	32	1.2598	2.0	0.078	106.0	4.173	114.0	4.488	159.0	6.260
BL319	95	3.7402	200	7.8740	45	1.7717	2.5	0.098	108.0	4.252	124.0	4.882	187.0	7.362
BL220	100	3.9370	180	7.0866	34	1.3386	2.0	0.078	111.0	4.370	121.5	4.783	169.0	6.654
BL221	105	4.1339	190	7.4803	36	1.4173	2.0	0.078	116.0	4.567	127.5	5.020	179.0	7.047

*Maximum fillet which corner radius of bearing will clear.

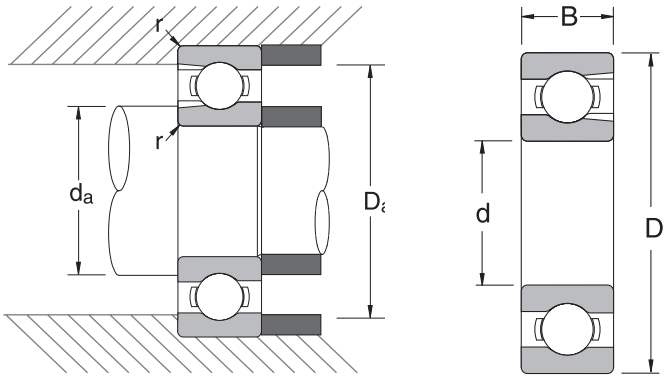

Common Options	
Z	One Shield
ZZ	Two Shields
NR	Snap Ring
CO*	Normal Internal Clearance
C3	Greater than Normal Internal Clearance

*Not shown in part number

Bearing Number	Basic Load Ratings				Limiting Speeds (RPM)		Bearing Weight (Approx.)	
	C_r		C_{or}					
	N	lbs	N	lbs	Grease	Oil	kg	lbs
BL205	14400	3250	10500	2360	12000	15000	0.133	0.29
BL305	21500	4850	15500	3450	11000	13000	0.246	0.54
BL206	21000	4750	16300	3650	10000	12000	0.215	0.47
BL306	27900	6250	20700	4650	9000	11000	0.364	0.80
BL207	27800	6250	22100	4950	9000	11000	0.307	0.68
BL307	37000	8350	29100	6550	8000	9500	0.486	1.07
BL208	35500	7950	28800	6500	8000	9500	0.394	0.87
BL308	46500	10400	36000	8050	7500	9000	0.685	1.47
BL209	37000	8350	32000	7150	7500	9000	0.449	0.99
BL309	55500	12500	44000	9900	6300	8000	0.883	1.94
BL210	39000	8750	35000	7850	6700	8500	0.504	1.11
BL310	65000	14600	52500	11800	6000	7100	1.16	2.51
BL211	48000	10800	44000	9900	6300	7500	0.67	1.46
BL311	75000	16800	61500	13800	5600	6700	1.49	3.23
BL212	58000	13100	54000	12200	5600	6700	0.86	1.88
BL312	85500	19200	71500	16100	5000	6000	1.88	4.07
BL213	63500	14300	60000	13500	5300	6300	1.09	2.40
BL313	103000	23100	89500	20200	4800	5600	2.36	5.10
BL214	69000	15500	66000	14900	5000	6000	1.19	2.62
BL314	115000	26000	102000	23000	4300	5300	2.87	6.23
BL215	72000	16200	72000	16100	4500	5600	1.29	2.84
BL315	126000	28300	116000	26000	4000	5000	3.43	7.44
BL216	84000	18900	85000	19100	4300	5300	1.61	3.48
BL316	136000	30500	130000	29200	3800	4500	4.08	8.89
BL217	93000	20900	93000	20900	4000	5000	1.97	4.29
BL317	147000	33000	145000	32500	3600	4300	4.77	10.4
BL218	107000	23900	107000	24100	3800	4500	2.43	5.30
BL318	158000	35500	161000	36000	3400	4000	5.45	11.8
BL219	121000	27100	123000	27600	3600	4300	2.95	6.38
BL319	169000	38000	178000	40000	2800	3600	6.40	14.1
BL220	136000	30500	140000	31500	3400	4000	3.54	7.68
BL221	148000	33000	157000	35500	3200	3800	4.23	9.20

C_r = Dynamic Radial Load Rating C_{or} = Static Radial Load Rating

DOUBLE ROW ANGULAR CONTACT BALL BEARINGS

EP | **32** | **10** | **B** | **2RS** | **TNG** | **C3**

Material Prefix
EP: Extra Pure Steel
Blank: Standard Materials

Basic Type & Series
3200: Metric, Max Capacity, Light, 32º Contact Angle
3200B: Metric, Conrad, Light, 25º Contact Angle
3300: Metric, Max Capacity, Medium, 32º Contact Angle
3300B: Metric, Conrad, Medium, 25º Contact Angle
5200: Metric, Conrad, Light, 25º Contact Angle
5300: Metric, Conrad, Medium, 25º Contact Angle

Bore Size
(04 and up: multiply last two numbers by 5 to get bore in mm)
00: 10 mm
01: 12 mm
02: 15 mm
03: 17 mm
04: 20 mm

Contact Angle
Blank for 3xxx Series: 32º
Blank for 5xxx Series: 25º
B for 3xxx Series: 25º

Bearing Protection
Blank: Open
2RS: Double Contact Seal
2Z: Double Shield

Cage Option
J, Blank: Steel
TNG: Polyamide

Internal Clearance
C2: Tight
Blank: Normal
C3: Greater than Normal
C4: Greater than C3

Please refer to the bearing tables for exact part number options.

INTERCHANGE

Description		Interchange				
		NSK	SKF	FAG	NTN	FAF/TIMKEN
Part Number	Maximum Capacity, Light	32xx, 32xxJ	52xxE, 32xx	32xx, 32xxC	32xx	52xx, 52xxW
	Maximum Capacity, Medium	33xx, 33xxJ	53xxE, 33xx	33xx, 33xxC	33xx	53xx, 53xxW
	Conrad, Light	32xxB, 52xx	52xxA, 32xxA	32xxB, 32xxBC	52xx	52xxK
	Conrad, Medium	33xxB, 53xx	53xxA, 33xxA	33xxB, 33xxBC	53xx	53xxK
Part Number Suffix	Polyamide Cage	TNG/TNH	TN9	TVP, TVH	--	PRB
	Steel Cage	Blank	Blank	Blank	Blank	Blank
	2 Contact Seals	2RS	2RS1	2RSR	LLU	PP
	2 Shields	2Z	2Z	2ZR	ZZ	FF
	Tight Clearance	C2	C2	C2	C2	H
	Normal Clearance	Blank	Blank	Blank	Blank	R
	Greater than Normal Clearance	C3	C3	C3	C3	P

The competitive manufacturers are provided for a convenient source of unit substitution. They can be considered interchangeable in most instances, but for special applications, please contact NSK. NSK assumes no liability with respect to errors or omissions.

APPLICATIONS

› Petrochemical Equipment › Gear Boxes › Centrifugal Pumps › Electrical Motors › Pumps and Compressors
› Transmissions › Worm Drives › Blowers and Fans

Please contact NSK Engineering for internal clearance information.

BALL BEARINGS: 3200/3300 SERIES

DOUBLE ROW, MAXIMUM CAPACITY, 32⁰ CONTACT ANGLE

Bearing Number	Nominal Bearing Dimensions						Preferred Shoulder Diameters					
	d		D		B		r*		da		Da	
									min		max	
	mm	inch	mm	inch	mm	inch	mm	inch	mm	inch	mm	inch
3200J	10	0.3937	30	1.1811	14.0	0.5512	0.600	0.023	14.000	0.551	26.000	1.024
3201J	12	0.4724	32	1.2598	15.9	0.6260	0.600	0.023	16.000	0.630	28.000	1.102
3202J	15	0.5906	35	1.3780	15.9	0.6260	0.600	0.023	19.000	0.748	31.000	1.220
3302J	15	0.5906	42	1.6535	19.0	0.7480	1.000	0.039	21.000	0.827	36.000	1.417
3203J	17	0.6693	40	1.5748	17.5	0.6890	0.600	0.023	21.000	0.827	36.000	1.417
3303J	17	0.6693	47	1.8504	22.2	0.8740	1.000	0.039	23.000	0.906	41.000	1.614
3204J	20	0.7874	47	1.8504	20.6	0.8110	1.000	0.039	26.000	1.024	41.000	1.614
3304J	20	0.7874	52	2.0472	22.2	0.8740	1.000	0.039	27.000	1.063	45.000	1.772
3205J	25	0.9843	52	2.0472	20.6	0.8110	1.000	0.039	31.000	1.220	46.000	1.811
3305J	25	0.9843	62	2.4409	25.4	1.0000	1.000	0.039	32.000	1.260	55.000	2.165
3206J	30	1.1811	62	2.4409	23.8	0.9370	1.000	0.039	36.000	1.417	56.000	2.205
3306J	30	1.1811	72	2.8346	30.2	1.1890	1.000	0.039	37.000	1.457	65.000	2.559
3207J	35	1.3780	72	2.8346	27.0	1.0630	1.000	0.039	42.000	1.654	65.000	2.559
3307J	35	1.3780	80	3.1496	34.9	1.3740	1.500	0.059	44.000	1.732	71.000	2.795
3208J	40	1.5748	80	3.1496	30.2	1.1890	1.000	0.039	47.000	1.850	73.000	2.874
3308J	40	1.5748	90	3.5433	36.5	1.4370	1.500	0.059	49.000	1.929	81.000	3.189
3209J	45	1.7717	85	3.3465	30.2	1.1890	1.000	0.039	52.000	2.047	78.000	3.071
3309J	45	1.7717	100	3.9370	39.7	1.5630	1.500	0.059	54.000	2.126	91.000	3.583
3210J	50	1.9685	90	3.5433	30.2	1.1890	1.000	0.039	57.000	2.244	83.000	3.268
3310J	50	1.9685	110	4.3307	44.4	1.7480	2.000	0.078	60.000	2.362	100.000	3.937
3211J	55	2.1654	100	3.9370	33.3	1.3110	1.500	0.059	64.000	2.520	91.000	3.583
3311J	55	2.1654	120	4.7244	49.2	1.9370	2.000	0.078	65.000	2.559	110.000	4.331
3212J	60	2.3622	110	4.3307	36.5	1.4370	1.500	0.059	69.000	2.717	101.000	3.976
3312J	60	2.3622	130	5.1181	54.0	2.1260	2.000	0.078	72.000	2.835	118.000	4.646
3213J	65	2.5591	120	4.7244	38.1	1.5000	1.500	0.059	74.000	2.913	111.000	4.370
3313J	65	2.5591	140	5.5118	58.7	2.3110	2.000	0.078	77.000	3.031	128.000	5.039
3214J	70	2.7559	125	4.9213	39.7	1.5630	1.500	0.059	79.000	3.110	116.000	4.567
3314J	70	2.7559	150	5.9055	63.5	2.5000	2.000	0.078	82.000	3.228	138.000	5.433

*Maximum fillet which corner radius of bearing will clear. Note: Limiting speeds are lower with contact seals. For more information, contact NSK.

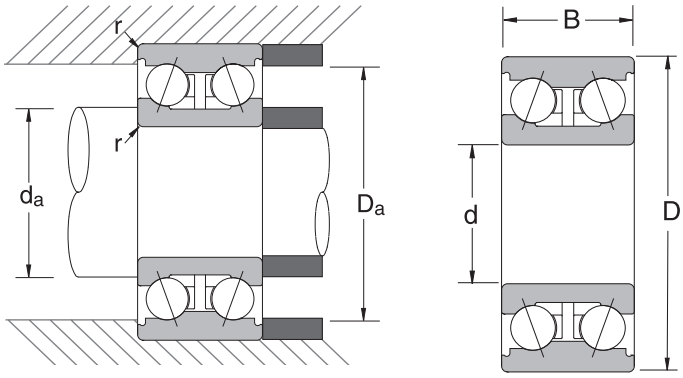

Common Options	
NR	Snap Ring
CO*	Normal Internal Clearance
C3	Greater than Normal Internal Clearance

*Not shown in part number

Bearing Number	Basic Load Ratings				Limiting Speeds (RPM)		Bearing Weight (Approx.)	
	C_r		C_{or}					
	N	lbs	N	lbs	Grease	Oil	kg	lbs
3200J	8300	1870	6500	1470	17000	24000	0.052	0.11
3201J	8300	1870	6600	1480	15000	20000	0.063	0.14
3202J	12400	2790	10100	2260	13000	18000	0.072	0.16
3302J	13900	3150	11600	2610	12000	17000	0.132	0.29
3203J	15500	3500	12900	2900	12000	17000	0.103	0.23
3303J	17200	3900	14800	3300	10000	15000	0.192	0.42
3204J	20800	4700	17900	4000	10000	15000	0.168	0.37
3304J	20800	4700	18000	4050	9500	14000	0.230	0.51
3205J	23100	5200	21800	4900	8500	12000	0.194	0.43
3305J	27300	6150	26600	5950	7500	10000	0.369	0.81
3206J	24900	5600	26100	5850	7000	9500	0.316	0.70
3306J	37000	8300	37000	8300	6300	8500	0.585	1.29
3207J	34500	7800	37500	8400	6300	8500	0.484	1.06
3307J	48000	10800	49000	11000	5600	7500	0.816	1.80
3208J	46000	10300	50500	11300	5600	7500	0.654	1.44
3308J	60000	13500	63000	14100	4800	6300	1.070	2.35
3209J	42000	9600	50500	11300	5000	6700	0.709	1.56
3309J	73000	16500	78500	17600	4300	5600	1.400	3.08
3210J	59000	11000	58500	13200	4800	6300	0.764	1.68
3310J	87500	19700	96000	21600	4000	5300	1.95	4.29
3211J	62500	14000	76000	17100	4300	5600	1.05	2.31
3311J	103000	23200	115000	25900	3600	4800	2.55	5.61
3212J	69000	15600	865000	19400	3800	5000	1.40	3.08
3312J	111000	25000	126000	28300	3400	4500	3.25	7.15
3213J	85000	19100	107000	24100	3600	4800	1.75	3.85
3313J	138000	31000	109000	24600	3200	4300	4.10	9.02
3214J	93000	20900	119000	26700	3200	4300	1.90	4.18
3314J	128000	28800	151000	34000	2800	3800	5.05	11.10

C_r = Dynamic Radial Load Rating C_{or} = Static Radial Load Rating

Note: Limiting speeds are lower with contact seals. For more information, contact NSK.

BALL BEARINGS: 5200/5300 SERIES

DOUBLE ROW, CONRAD TYPE, BORE SIZES: 10MM TO 40MM, 25⁰ CONTACT ANGLE

Bearing Number	Nominal Bearing Dimensions						Preferred Shoulder Diameters					
	d		D		B		r*		da		Da	
									min		max	
	mm	inch	mm	inch	mm	inch	mm	inch	mm	inch	mm	inch
5200TN	10	0.3937	30	1.1811	14.3	0.5512	0.6	0.023	15.0	0.591	25.0	0.984
5200J	10	0.3937	30	1.1811	14.3	0.5512	0.6	0.023	15.0	0.591	25.0	0.984
5201TN	12	0.4724	32	1.2598	15.9	0.6260	0.6	0.023	17.0	0.669	27.0	1.063
5201J	12	0.4724	32	1.2598	15.9	0.6260	0.6	0.023	17.0	0.669	27.0	1.063
5202TN	15	0.5906	35	1.3780	15.9	0.6260	0.6	0.023	20.0	0.787	30.0	1.181
5202J	15	0.5906	35	1.3780	15.9	0.6260	0.6	0.023	20.0	0.787	30.0	1.181
5302TN	15	0.5906	42	1.6535	19.0	0.7480	1.0	0.039	21.0	0.827	36.0	1.417
5203TN	17	0.6693	40	1.5748	17.5	0.6890	0.6	0.023	22.0	0.866	35.0	1.378
5203J	17	0.6693	40	1.5748	17.5	0.6890	0.6	0.023	22.0	0.866	35.0	1.378
5303TN	17	0.6693	47	1.8504	22.2	0.8740	1.0	0.039	23.0	0.906	41.0	1.614
5303J	17	0.6693	47	1.8504	22.2	0.8740	1.0	0.039	23.0	0.906	41.0	1.614
5204TN	20	0.7874	47	1.8504	20.6	0.8110	1.0	0.039	26.0	1.024	41.0	1.614
5204J	20	0.7874	47	1.8504	20.6	0.8110	1.0	0.039	26.0	1.024	41.0	1.614
5304TN	20	0.7874	52	2.0472	22.2	0.8740	1.0	0.039	27.0	1.063	45.0	1.772
5304J	20	0.7874	52	2.0472	22.2	0.8740	1.0	0.039	27.0	1.063	45.0	1.772
5205TN	25	0.9843	52	2.0472	20.6	0.8110	1.0	0.039	31.0	1.220	46.0	1.811
5205J	25	0.9843	52	2.0472	20.6	0.8110	1.0	0.039	31.0	1.220	46.0	1.811
5305TN	25	0.9843	62	2.4409	25.4	1.0000	1.0	0.039	32.0	1.260	55.0	2.165
5305J	25	0.9843	62	2.4409	25.4	1.0000	1.0	0.039	32.0	1.260	55.0	2.165
5206TN	30	1.1811	62	2.4409	23.8	0.9370	1.0	0.039	36.0	1.417	56.0	2.205
5206J	30	1.1811	62	2.4409	23.8	0.9370	1.0	0.039	36.0	1.417	56.0	2.205
5306TN	30	1.1811	72	2.8346	30.2	1.1890	1.0	0.039	37.0	1.457	65.0	2.559
5306J	30	1.1811	72	2.8346	30.2	1.1890	1.0	0.039	37.0	1.457	65.0	2.559
5207TN	35	1.3780	72	2.8346	27.0	1.0630	1.0	0.039	42.0	1.654	65.0	2.559
5207J	35	1.3780	72	2.8346	27.0	1.0630	1.0	0.039	42.0	1.654	65.0	2.559
5307TN	35	1.3780	80	3.1496	34.9	1.3740	1.5	0.059	44.0	1.732	71.0	2.795
5307J	35	1.3780	80	3.1496	34.9	1.3740	1.5	0.059	44.0	1.732	71.0	2.795
5208TN	40	1.5748	80	3.1496	30.2	1.1890	1.0	0.039	47.0	1.850	73.0	2.874
5208J	40	1.5748	80	3.1496	30.2	1.1890	1.0	0.039	47.0	1.850	73.0	2.874
5308TN	40	1.5748	90	3.5433	36.5	1.4370	1.5	0.059	49.0	1.929	81.0	3.189
5308J	40	1.5748	90	3.5433	36.5	1.4370	1.5	0.059	49.0	1.929	81.0	3.189

*Maximum fillet which corner radius of bearing will clear.

Note: Limiting speeds are lower with contact seals. For more information, contact NSK.

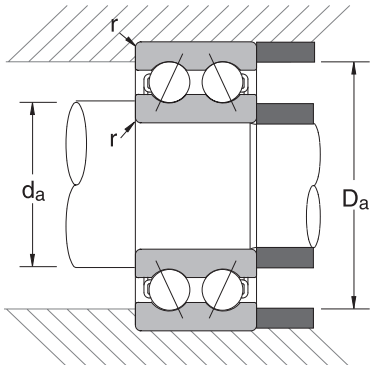

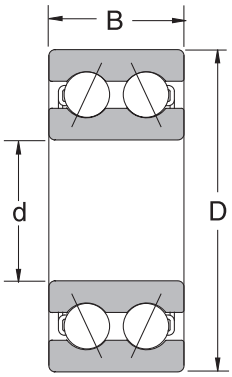

Common Options	
2RS**	Two Seals
ZZ	Two Shields
NR	Snap Ring
J	Steel Cage
TN	Polyamide Cage
C0*	Normal Internal Clearance
C3	Greater than Normal Internal Clearance

*Not shown in part number

** Available with TN only

Bearing Number	Basic Load Ratings				Limiting Speeds (RPM)		Bearing Weight (Approx.)	
	C_r		C_{or}					
	N	lbs	N	lbs	Grease	Oil	kg	lbs
5200TN	7850	1760	4550	1020	16000	22000	0.043	0.09
5200J	7150	1610	3900	880	17000	22000	0.050	0.11
5201TN	10700	2400	5850	1320	15000	20000	0.051	0.11
5201J	10500	2360	5800	1300	15000	20000	0.060	0.13
5202TN	11800	2660	7050	1590	13000	18000	0.058	0.13
5202J	11700	2630	7050	1580	13000	17000	0.070	0.15
5302TN	16200	3650	10000	2260	10000	15000	0.112	0.25
5203TN	14600	3300	9000	2020	10000	15000	0.085	0.19
5203J	14600	3300	9050	2030	11000	15000	0.090	0.20
5303TN	20900	4700	12400	2790	9500	14000	0.161	0.35
5303J	21000	4750	12600	2830	10000	13000	0.140	0.31
5204TN	19600	4400	12500	2810	9000	13000	0.139	0.31
5204J	19600	4400	12400	2790	10000	13000	0.120	0.26
5304TN	23300	5250	15100	3400	8500	12000	0.197	0.43
5304J	24600	5550	15000	3350	9000	12000	0.230	0.51
5205TN	21300	4800	14700	3300	8000	11000	0.159	0.35
5205J	21300	4800	14700	3300	8500	11000	0.190	0.42
5305TN	29800	6700	19900	4500	7500	10000	0.316	0.70
5305J	32500	7350	20700	4650	7500	10000	0.340	0.75
5206TN	29600	6650	21100	4750	7100	9000	0.265	0.58
5206J	29600	6650	21100	4750	7100	9500	0.290	0.64
5306TN	41500	9300	28500	6400	6200	7900	0.496	1.09
5306J	40500	9150	28100	6300	6300	8500	0.510	1.12
5207TN	39000	8750	28700	6450	5600	7100	0.412	0.91
5207J	39000	8750	28700	6450	6300	8000	0.430	0.95
5307TN	51500	11600	34500	7800	5100	6500	0.664	1.46
5307J	51000	11500	36000	8100	5600	7500	0.790	1.74
5208TN	48000	10800	36500	8150	5000	6300	0.550	1.21
5208J	44000	9950	33500	7500	5600	7100	0.570	1.25
5308TN	62500	14000	45000	10200	4700	5800	0.905	1.99
5308J	56500	12700	41000	9250	5300	6700	1.050	2.31

C_r = Dynamic Radial Load Rating C_{or} = Static Radial Load Rating

Note: Limiting speeds are lower with contact seals. For more information, contact NSK.

BALL BEARINGS: 5200/5300 SERIES (CONT.)

DOUBLE ROW, CONRAD TYPE, BORE SIZES: 45MM TO 85MM, 25⁰ CONTACT ANGLE

Bearing Number	Nominal Bearing Dimensions						Preferred Shoulder Diameters					
	d		D		B		r*		da		Da	
									min		max	
	mm	inch	mm	inch	mm	inch	mm	inch	mm	inch	mm	inch
5209TN	45	1.7717	85	3.3465	30.2	1.189	1.0	0.039	52.0	2.047	78.0	3.071
5209J	45	1.7717	85	3.3465	30.2	1.189	1.0	0.039	52.0	2.047	78.0	3.071
5309TN	45	1.7717	100	3.9370	39.7	1.563	1.5	0.059	54.0	2.126	91.0	3.583
5309J	45	1.7717	100	3.9370	39.7	1.563	1.5	0.059	54.0	2.126	91.0	3.583
5210TN	50	1.9685	90	3.5433	30.2	1.189	1.0	0.039	57.0	2.224	83.0	3.268
5210J	50	1.9685	90	3.5433	30.2	1.189	1.0	0.039	56.5	2.224	83.0	3.268
5310TN	50	1.9685	110	4.3307	44.4	1.748	2.0	0.078	60.0	2.362	100.0	3.937
5310J	50	1.9685	110	4.3307	44.4	1.748	2.0	0.078	60.0	2.362	100.0	3.937
5211TN	55	2.1654	100	3.9370	33.3	1.311	1.5	0.059	64.0	2.520	91.0	3.602
5211J	55	2.1654	100	3.9370	33.3	1.311	1.5	0.059	64.0	2.520	91.5	3.602
5311TN	55	2.1654	120	4.7244	49.2	1.937	2.0	0.078	65.0	2.559	110.0	4.331
5311J	55	2.1654	120	4.7244	49.2	1.937	2.0	0.078	65.0	2.559	110.0	4.331
5212TN	60	2.3622	110	4.3307	36.5	1.437	1.5	0.059	69.0	2.717	101.0	3.996
5212J	60	2.3622	110	4.3307	36.5	1.437	1.5	0.059	69.0	2.717	101.5	3.996
5312TN	60	2.3622	130	5.1181	54.0	2.126	2.0	0.078	72.0	2.835	118.0	4.646
5312J	60	2.3622	130	5.1181	54.0	2.126	2.0	0.078	72.0	2.835	118.0	4.646
5213TN	65	2.5591	120	4.7244	38.1	1.500	1.5	0.059	74.0	2.913	111.0	4.370
5213J	65	2.5591	120	4.7244	38.1	1.500	1.5	0.059	74.0	2.913	111.0	4.370
5313TN	65	2.5591	140	5.5118	58.7	2.311	2.0	0.078	77.0	3.034	128.0	5.039
5313J	65	2.5591	140	5.5118	58.7	2.311	2.0	0.078	77.1	3.034	128.0	5.039
5214TN	70	2.7559	125	4.9213	39.7	1.563	1.5	0.059	79.0	3.110	116.0	4.567
5214J	70	2.7559	125	4.9213	39.7	1.563	1.5	0.059	79.0	3.110	116.0	4.567
5314J	70	2.7559	150	5.9055	63.5	2.500	2.0	0.078	82.0	3.228	135.0	5.433
5215J	75	2.9528	130	5.1181	41.3	1.626	1.5	0.059	84.0	3.307	121.0	4.764
5216J	80	3.1496	140	5.5118	44.4	1.748	2.0	0.078	90.0	3.543	130.0	5.118
5217J	85	3.3465	150	5.9055	49.2	1.937	2.0	0.078	95.0	3.740	140.0	5.512

*Maximum fillet which corner radius of bearing will clear. Note: Limiting speeds are lower with contact seals. For more information, contact NSK.

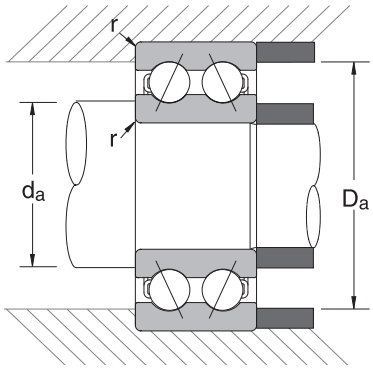

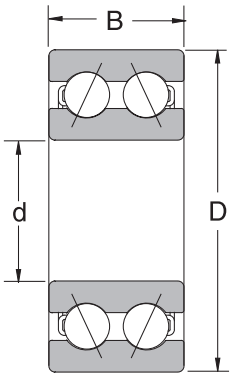

Common Options	
2RS**	Two Seals
ZZ	Two Shields
NR	Snap Ring
J	Steel Cage
TN	Polyamide Cage
CO*	Normal Internal Clearance
C3	Greater than Normal Internal Clearance

*Not shown in part number

** Available with TN only

Bearing Number	Basic Load Ratings				Limiting Speeds (RPM)		Bearing Weight (Approx.)	
	C_r		C_{or}					
	N	lbs	N	lbs	Grease	Oil	kg	lbs
5209TN	48000	10800	37000	8350	5000	6700	0.583	1.28
5209J	49500	11100	38000	8600	5000	6700	0.620	1.36
5309TN	68500	15400	51000	11500	4500	6000	1.210	2.66
5309J	68500	15400	51000	11400	4500	6000	1.400	3.08
5210TN	51500	11600	42000	9450	4800	6300	0.632	1.39
5210J	53000	11900	43500	9750	4800	6000	0.670	1.47
5310TN	81500	18300	61500	13800	4000	5300	1.600	3.52
5310J	81500	18300	61500	13800	4300	5600	1.950	4.29
5211TN	59000	13300	49500	11100	4300	5600	0.876	1.93
5211J	56000	12600	49000	11000	4300	5600	0.960	2.11
5311TN	102000	23000	79000	17700	3800	5000	2.11	4.64
5311J	95000	21400	73000	16400	3800	5000	2.30	5.06
5212TN	72000	16200	61500	13800	3800	5000	1.18	2.60
5212J	69000	15600	62000	13900	3800	5000	1.35	2.97
5312TN	125000	28100	98000	22000	3400	4500	2.70	5.94
5312J	125000	28200	98500	22100	3400	4500	3.15	6.93
5213TN	80000	18000	72500	16300	3400	4500	1.52	3.34
5213J	76500	17100	69000	15500	3600	4500	1.65	3.63
5313TN	149000	33500	118000	26600	3200	4300	3.39	7.46
5313J	142000	32000	113000	25300	3200	4300	3.85	8.47
5214TN	83500	18800	76500	17200	3400	4500	1.64	3.61
5214J	94000	21100	82000	18500	3400	4500	1.80	3.96
5314J	159000	36000	128000	28900	3000	3800	4.90	10.8
5215J	93500	21000	83000	18700	3200	4300	1.90	4.18
5216J	99000	22300	93000	20900	3000	3800	2.50	5.50
5217J	116000	26100	110000	24800	2800	3600	3.40	7.48

C_r = Dynamic Radial Load Rating C_{or} = Static Radial Load Rating

Note: Limiting speeds are lower with contact seals. For more information, contact NSK.

SELF-ALIGNING BALL BEARINGS

Basic Type & Series
1200: Metric, Self-Aligning, Extra Narrow
1300: Metric, Self-Aligning, Narrow
2200: Metric, Self-Aligning, Wide
2300: Metric, Self-Aligning, Extra Wide
NLJ: Inches, Self-Aligning, Light
NMJ: Inches, Self-Aligning, Medium

Suffixes
2RS: Double Contact Seal
K: Taper Bore 1:12
E: Extra Capacity
NR: Snap Ring

Internal Clearance
C2: Tight
Blank: Normal
C3: Greater than Normal
C4: Greater than C3

HTF **22** **06** **2RS** **TNG** **C3**

Material Prefix
HTF: High Tough
Blank: Standard Materials

Bore Size
(04 and up: multiply last two numbers by 5 to get bore in mm)
00: 10 mm **04:** 20 mm
01: 12 mm **05:** 25 mm
02: 15 mm **12:** 60 mm
03: 17 mm **20:** 100 mm
Inch: directly indicated

Cage Option
TNG: Polyamide
J: Pressed Steel

Please refer to the bearing tables for exact part number options.

APPLICATIONS

› Film Processing Equipment › Vertical Spinning Equipment › Vertical Weaving Equipment › Industrial Countershafts
› Paper Making – Fourdrinier

INTERCHANGE

Description		Interchange			
		NSK	SKF	FAG	NTN
Part Number	Metric, Self-Aligning, Extra Narrow	12xx	12xx	12xx	12xx
	Metric, Self-Aligning, Narrow	13xx	13xx	13xx	13xx
	Metric, Self-Aligning, Wide	22xx	22xx	22xx	22xx
	Metric, Self-Aligning, Extra Wide	23xx	23xx	23xx	23xx
Part Number Suffix	Polyamide Cage	TNG	TN9	TV	--
	Steel Cage	Blank, J	Blank	Blank	Blank
	2 Contact Seals	2RS	2RS1	2RSR	LLU
	Tight Clearance	C2	C2	C2	C2
	Normal Clearance	Blank	Blank	Blank	Blank
	Greater than Normal Clearance	C3	C3	C3	C3
	Tapered Bore 1:12	K	K	K	K

The competitive manufacturers are provided for a convenient source of unit substitution. They can be considered interchangeable in most instances, but for special applications, please contact NSK. NSK assumes no liability with respect to errors or omissions.

RADIAL INTERNAL CLEARANCE

Unit: µm

Nominal Bore Diameter d (mm)		Clearance in Bearings with Cylindrical Bores										Clearance in Bearings with Tapered Bores									
		C2		CN		C3		C4		C5		C2		CN		C3		C4		C5	
over	incl.	min	max	min	max	min	max	min	max	min	max	min	max	min	max	min	max	min	max	min	max
2.5	6	1	8	5	15	10	20	15	25	21	33	--	--	--	--	--	--	--	--	--	--
6	10	2	9	6	17	12	25	19	33	27	42	--	--	--	--	--	--	--	--	--	--
10	14	2	10	6	19	13	26	21	35	30	48	--	--	--	--	--	--	--	--	--	--
14	18	3	12	8	21	15	28	23	37	32	50	--	--	--	--	--	--	--	--	--	--
18	24	4	14	10	23	17	30	25	39	34	52	7	17	13	26	20	33	28	42	37	55
24	30	5	16	11	24	19	35	29	46	40	58	9	20	15	28	23	39	33	50	44	62
30	40	6	18	13	29	23	40	34	53	46	66	12	24	19	35	29	46	40	59	52	72
40	50	6	19	14	31	25	44	37	57	50	71	14	27	22	39	33	52	45	65	58	79
50	65	7	21	16	36	30	50	45	69	62	88	18	32	27	47	41	61	56	80	73	99
65	80	8	24	18	40	35	60	54	83	76	108	23	39	35	57	50	75	69	98	91	123
80	100	9	27	22	48	42	70	64	96	89	124	29	47	42	68	62	90	84	116	109	144
100	120	10	31	25	56	50	83	75	114	105	145	35	56	50	81	75	108	100	139	130	170
120	140	10	38	30	68	60	100	90	135	125	175	40	68	60	98	90	130	120	165	155	205
140	160	15	44	35	80	70	120	110	161	150	210	45	74	65	110	100	150	140	191	180	240

BALL BEARINGS: 1200/1300 SERIES

DOUBLE ROW, SELF-ALIGNING

Bearing Number	Nominal Bearing Dimensions						Preferred Shoulder Diameters					
	d		D		B		r*		da		Da	
									min		max	
	mm	inch	mm	inch	mm	inch	mm	inch	mm	inch	mm	inch
1200	10	0.3937	30	1.1811	9	0.3543	0.6	0.023	14.0	0.551	26.0	1.024
1201	12	0.4724	32	1.2598	10	0.3937	0.6	0.023	16.0	0.630	28.0	1.102
1301	12	0.4724	37	1.4567	12	0.4724	1.0	0.039	17.0	0.669	32.0	1.260
1202	15	0.5906	35	1.3780	11	0.4331	0.6	0.023	19.0	0.748	31.0	1.220
1302	15	0.5906	42	1.6535	13	0.5118	1.0	0.039	20.0	0.787	37.0	1.457
1203	17	0.6693	40	1.5748	12	0.4724	0.6	0.023	21.0	0.827	36.0	1.417
1303	17	0.6693	47	1.8504	14	0.5512	1.0	0.039	22.0	0.866	42.0	1.654
1204	20	0.7874	47	1.8504	14	0.5512	1.0	0.039	25.0	0.984	42.0	1.654
1304	20	0.7874	52	2.0472	15	0.5906	1.0	0.039	26.5	1.043	45.5	1.791
1205	25	0.9843	52	2.0472	15	0.5906	1.0	0.039	30.0	1.181	47.0	1.850
1305	25	0.9843	62	2.4409	17	0.6693	1.0	0.039	31.5	1.240	55.5	2.185
1206	30	1.1811	62	2.4409	16	0.6299	1.0	0.039	35.0	1.378	57.0	2.244
1306	30	1.1811	72	2.8346	19	0.7480	1.0	0.039	36.5	1.437	65.5	2.579
1207	35	1.3780	72	2.8346	17	0.6693	1.0	0.039	41.5	1.634	65.5	2.579
1307	35	1.3780	80	3.1496	21	0.8268	1.5	0.059	43.0	1.693	72.0	2.835
1208	40	1.5748	80	3.3150	18	0.7087	1.0	0.039	46.5	1.831	73.5	2.894
1308	40	1.5748	90	3.5433	23	0.9055	1.5	0.059	48.0	1.890	82.0	3.228
1209	45	1.7717	85	3.3465	19	0.7480	1.0	0.039	51.5	2.028	78.5	3.091
1309	45	1.7717	100	3.9370	25	0.9843	1.5	0.059	53.0	2.087	92.0	3.622
1210	50	1.9685	90	3.5433	20	0.7874	1.0	0.039	56.5	2.224	83.5	3.287
1310	50	1.9685	110	4.3307	27	1.0630	2.0	0.078	59.0	2.323	101.0	3.976
1211	55	2.1654	100	3.9370	21	0.8268	1.5	0.059	63.0	2.480	92.0	3.622
1311	55	2.1654	120	4.7244	29	1.1417	2.0	0.078	64.0	2.520	111.0	4.370
1212	60	2.3622	110	4.3307	22	0.8661	1.5	0.059	68.0	2.677	102.0	4.016
1312	60	2.3622	130	5.1181	31	1.2205	2.0	0.078	71.0	2.795	119.0	4.685
1213	65	2.5591	120	4.7244	23	0.9055	1.5	0.059	73.0	2.874	112.0	4.409
1313	65	2.5591	140	5.5118	33	1.2992	2.0	0.078	76.0	2.992	129.0	5.079
1214	70	2.7559	125	4.9213	24	0.9449	1.5	0.059	78.0	3.071	117.0	4.606
1314	70	2.7559	150	5.9055	35	1.3780	2.0	0.078	81.0	3.189	139.0	5.472
1215	75	2.9528	130	5.1181	25	0.9843	1.5	0.059	83.0	3.268	122.0	4.803
1315	75	2.9528	160	6.2992	37	1.4567	2.0	0.078	86.0	3.386	149.0	5.866

*Maximum fillet which corner radius of bearing will clear.

Note: Limiting speeds are lower with contact seals. For more information, contact NSK.

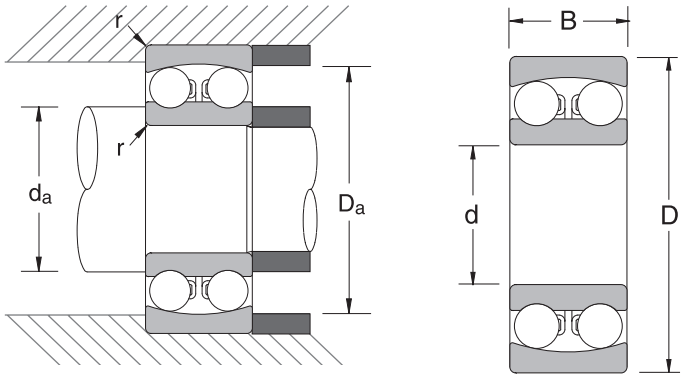

Common Options	
E	Extra Capacity
K	Tapered Bore
CO*	Normal Internal Clearance
C3	Greater than Normal Internal Clearance

*Not shown in part number

Bearing Number	Basic Load Ratings				Limiting Speeds (RPM)		Bearing Weight (Approx.)	
	C_r		C_{or}					
	N	lbs	N	lbs	Grease	Oil	kg	lbs
1200	5550	1250	1190	267	22000	28000	0.033	0.07
1201	5700	1280	1270	286	22000	26000	0.039	0.09
1301	9650	2170	2160	485	18000	22000	0.066	0.15
1202	7600	1710	1750	395	18000	22000	0.051	0.11
1302	9700	2180	2290	515	16000	20000	0.093	0.20
1203	8000	1800	2010	455	16000	20000	0.072	0.16
1303	12700	2860	3200	715	14000	17000	0.130	0.29
1204	10000	2250	2610	585	14000	17000	0.120	0.26
1304	12600	2820	3350	750	12000	15000	0.165	0.36
1205	12200	2750	3300	740	12000	14000	0.140	0.31
1305	18200	4100	5000	1130	10000	13000	0.255	0.56
1206	15800	3550	4650	1040	10000	12000	0.220	0.48
1306	21400	4800	6300	1420	8500	11000	0.385	0.85
1207	15900	3550	5100	1150	8500	10000	0.320	0.70
1307	25300	5700	7850	1770	7500	9500	0.510	1.12
1208	19300	4350	6500	1460	7500	9000	0.415	0.91
1308	29800	6700	9700	2180	6700	8500	0.715	1.57
1209	22000	4950	7350	1650	7100	8500	0.465	1.02
1309	38500	8650	12700	2860	6000	7500	0.955	2.10
1210	22800	5150	8100	1830	6300	8000	0.525	1.16
1310	43500	9850	14100	3150	5600	6700	1.250	2.75
1211	26900	6050	10000	2250	6000	7100	0.705	1.55
1311	51500	11600	17900	4000	5000	6000	1.600	3.52
1212	30500	6800	11500	2590	2300	6300	0.900	1.98
1312	57500	13000	20800	4700	4500	5600	2.03	4.47
1213	31000	7000	12500	2820	4800	6000	1.15	2.53
1313	62500	14000	22900	5150	4300	5300	2.54	5.59
1214	35000	7800	13800	3100	4800	5600	1.30	2.86
1314	75000	16800	27700	6250	4000	5000	3.19	7.02
1215	39000	8750	15700	3550	4300	5300	1.41	3.10
1315	80000	18000	30000	6750	3800	4500	3.65	8.03

C_r = Dynamic Radial Load Rating C_{or} = Static Radial Load Rating

Note: Limiting speeds are lower with contact seals. For more information, contact NSK.

BALL BEARINGS: 2200/2300 SERIES

DOUBLE ROW, SELF-ALIGNING

Bearing Number	Nominal Bearing Dimensions						Preferred Shoulder Diameters					
	d		D		B		r*		da		Da	
									min		max	
	mm	inch	mm	inch	mm	inch	mm	inch	mm	inch	mm	inch
2200	10	0.3937	30	1.1811	14	0.5512	0.6	0.023	14.0	0.551	26.0	1.024
2201	12	0.4724	32	1.2598	14	0.5512	0.6	0.023	16.0	0.630	28.0	1.102
2202	15	0.5906	35	1.3780	14	0.5512	0.6	0.023	19.0	0.748	31.0	1.220
2302	15	0.5906	42	1.6535	17	0.6693	1.0	0.039	20.0	0.787	37.0	1.457
2203	17	0.6693	40	1.5748	16	0.6299	0.6	0.023	21.0	0.827	36.0	1.417
2303	17	0.6693	47	1.8504	19	0.7480	1.0	0.039	22.0	0.866	42.0	1.654
2204	20	0.7874	47	1.8504	18	0.7087	1.0	0.039	25.0	0.984	42.0	1.654
2304	20	0.7874	52	2.0472	21	0.8268	1.1	0.043	26.5	1.043	45.5	1.791
2205	25	0.9843	52	2.0472	18	0.7087	1.0	0.039	30.0	1.181	47.0	1.850
2305	25	0.9843	62	2.4409	24	0.9449	1.1	0.043	31.5	1.240	55.5	2.185
2206	30	1.1811	62	2.4409	20	0.7874	1.0	0.039	35.0	1.378	57.0	2.244
2306	30	1.1811	72	2.8346	27	1.0630	1.1	0.043	36.5	1.437	65.5	2.579
2207	35	1.3780	72	2.8346	23	0.9055	1.1	0.043	41.5	1.634	65.5	2.579
2307	35	1.3780	80	3.1496	31	1.2205	1.5	0.059	43.0	1.693	72.0	2.835
2208	40	1.5748	80	3.1496	23	0.9055	1.1	0.043	46.5	1.831	73.5	2.894
2308	40	1.5748	90	3.5433	33	1.2992	1.5	0.059	48.0	1.890	82.0	3.228
2209	45	1.7717	85	3.3465	23	0.9055	1.1	0.043	51.5	2.028	78.5	3.091
2309	45	1.7717	100	3.9370	36	1.4173	1.5	0.059	53.0	2.087	92.0	3.622
2210	50	1.9685	90	3.5433	23	0.9055	1.1	0.043	56.5	2.224	83.5	3.287
2310	50	1.9685	110	4.3307	40	1.5748	2.0	0.078	59.0	2.323	101.0	3.976
2211	55	2.1654	100	3.9370	25	0.9843	1.5	0.059	63.0	2.480	92.0	3.622
2311	55	2.1654	120	4.7244	43	1.6929	2.0	0.078	64.0	2.520	111.0	4.370
2212	60	2.3622	110	4.3307	28	1.1024	1.5	0.059	68.0	2.677	102.0	4.016
2312	60	2.3622	130	5.1181	46	1.8110	2.0	0.078	71.0	2.795	119.0	4.685
2213	65	2.5591	120	4.7244	31	1.2205	1.5	0.059	73.0	2.874	112.0	4.409
2313	65	2.5591	140	5.5118	48	1.8898	2.0	0.078	76.0	2.992	129.0	5.079
2214	70	2.7559	125	4.9213	31	1.2205	1.5	0.059	78.0	3.071	117.0	4.606
2314	70	2.7559	150	5.9055	51	2.0079	2.0	0.078	81.0	3.189	139.0	5.472
2215	75	2.9528	130	5.1181	31	1.2205	1.5	0.059	83.0	3.268	122.0	4.803
2315	75	2.9528	160	6.2992	55	2.1654	2.0	0.078	86.0	3.386	149.0	5.866
2216	80	3.1496	140	5.5118	33	1.2992	2.0	0.078	89.0	3.504	131.0	5.157
2316	80	3.1496	170	6.6929	58	2.2835	2.0	0.078	91.0	3.583	159.0	6.260

*Maximum fillet which corner radius of bearing will clear. Note: Limiting speeds are lower with contact seals. For more information, contact NSK.

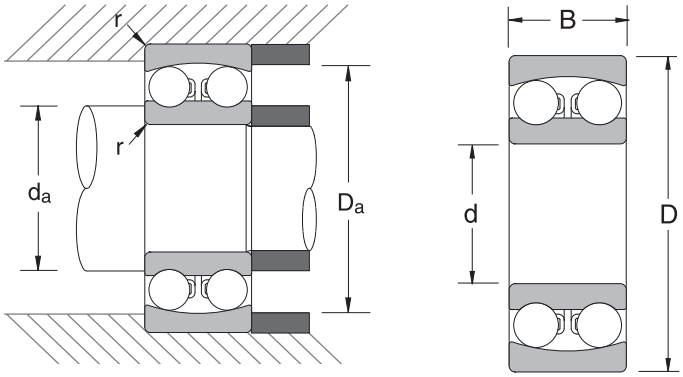

Common Options	
E	Extra Capacity
K	Tapered Bore
CO*	Normal Internal Clearance
C3	Greater than Normal Internal Clearance

*Not shown in part number

Bearing Number	Basic Load Ratings				Limiting Speeds (RPM)		Bearing Weight (Approx.)	
	C_r		C_{or}					
	N	lbs	N	lbs	Grease	Oil	kg	lbs
2200	7450	1680	1590	360	24000	28000	0.042	0.09
2201	7750	1740	1730	390	22000	26000	0.048	0.11
2202	7800	1750	1850	415	18000	22000	0.055	0.12
2302	12300	2760	2910	655	14000	18000	0.108	0.24
2203	9950	2240	2420	545	16000	20000	0.085	0.19
2303	14700	3300	3500	800	13000	16000	0.150	0.33
2204	12800	2880	3300	745	14000	17000	0.133	0.29
2304	18500	4150	4700	1060	11000	14000	0.193	0.42
2205	12400	2790	3450	775	12000	14000	0.150	0.33
2305	24900	5600	6600	1480	9500	12000	0.319	0.70
2206	15300	3450	4550	1020	10000	12000	0.249	0.55
2306	32000	7200	8750	1970	8000	10000	0.480	1.06
2207	21700	4900	6600	1480	8500	10000	0.378	0.83
2307	40000	9000	11300	2530	7100	9000	0.642	1.41
2208	22400	5050	7350	1650	7500	9000	0.477	1.05
2308	45500	10200	13500	3050	6300	8000	0.889	1.96
2209	23300	5250	8150	1830	7100	8500	0.522	1.15
2309	55000	12300	16700	3750	5600	7100	1.200	2.64
2210	23300	5250	8450	1900	6300	8000	0.564	1.24
2310	65000	14700	20200	4550	5000	6300	1.580	3.48
2211	26700	6000	9900	2220	6000	7100	0.746	1.64
2311	76500	17200	24000	5400	4800	6000	2.03	4.47
2212	34000	7700	12600	2840	5300	6300	1.03	2.27
2312	88500	19800	28300	6350	4300	5300	2.57	5.65
2213	43500	9850	16400	3700	4800	6000	1.40	3.08
2313	97000	21800	32500	7300	3800	4800	3.20	7.04
2214	44000	9950	17100	3850	4500	5600	1.52	3.34
2314	111000	24900	37500	8450	3600	4500	3.90	8.58
2215	44500	10000	17800	4000	4300	5300	1.60	3.52
2315	125000	28000	43000	9650	3400	4300	4.77	10.5
2216	49000	11000	19900	4450	4000	5000	1.97	4.33
2316	130000	29100	45000	10200	3200	4000	5.54	12.2

C_r = Dynamic Radial Load Rating C_{or} = Static Radial Load Rating

Note: Limiting speeds are lower with contact seals. For more information, contact NSK.

ANGULAR CONTACT BALL BEARINGS

Other Features
G: Ground on Both Sides for use in Universal Duplex Mounting with Clearance
PC: Combination of Flush Ground Faces, Normal Axial Clearance and ABEC3 (ISO Class 6) Tolerance

Basic Type & Series
7200: Metric, Angular Contact, Light
7300: Metric, Angular Contact, Medium
7400: Metric, Angular Contact, Heavy

Contact Angle
B: 40°
C: 15°
A: 30°

HTF | 72 | 10 | B | Y | G

Material Prefix
HTF: High Tough
Blank: Standard Materials

Bore Size
(04 and up: multiply last two numbers by 5 to get bore in mm)
00: 10 mm **04:** 20 mm
01: 12 mm **05:** 25 mm
02: 15 mm **12:** 60 mm
03: 17 mm **20:** 100 mm

Cage Option
M: Machined Brass, Land Riding
Y: Pressed Brass
W: Steel

Please refer to the bearing tables for exact part number options.

HIGH PERFORMANCE STANDARD (HPS)

Basic Type & Series
7200: Metric, Angular Contact, Light
7300: Metric, Angular Contact, Medium

Contact Angle
B: 40°

Cage Option
MR: Machined Brass, Ball Riding
T85: Polyamide 46 Resin Cage
T7: L-PPS Resin Cage

Internal Clearance
CNB: Normal
GA: Light Preload

HTF | 72 | 10 | B | EA | MR | SU | CNB

Material Prefix
HTF: High Tough
Blank: Standard Materials

Bore Size
(04 and up: multiply last two numbers by 5 to get bore in mm)
00: 10 mm **04:** 20 mm
01: 12 mm **05:** 25 mm
02: 15 mm **12:** 60 mm
03: 17 mm **20:** 100 mm

Capacity
EA: Extra Capacity

Other Features
SU: Single Universal Flush Ground
DU: Duplex Universal Flush Ground

Please refer to the bearing tables for exact part number options.

INTERCHANGE

Description		Interchange					
		NSK	SKF	FAF/TIMKEN	FAG	MRC	NTN
Part No.	Light	72xx	72xx	72xx	72xx	72xx	72xx
	Medium	73xx	73xx	73xx	73xx	73xx	73xx
	Heavy	74xx	74xx	74xx	74xx	74xx	74xx
Part Number Suffix	40° Contact	B	B	WN	B	P	B
	30° Contact	A	A	--	--	BLANK	BLANK
	25° Contact	A5	ACD, AC	--	E	--	--
	15° Contact	C	CD	--	C	R	C
	Machined Brass Cage	M	M	MBR	MP	BRZ	L1
	Pressed Brass Cage	Y	Y	BLANK	YP	--	--
	Polyamide Cage	TY	P	PRC	TVP	BKE	T2
	Steel Cage	W	J	--	JP	BLANK	J
	Universal Ground Faces	G	CA, CB	SU	UA	DE	G
	Petrochemical	BMPC	BECBM	--	--	PumpPac*	--

The competitive manufacturers are provided for a convenient source of unit substitution. They can be considered interchangeable in most instances, but for special applications, please consult NSK Engineering. NSK assumes no liability with respect to errors or omissions. *PumpPac is a registered trademark of SKF USA.

INTERCHANGE - HPS

Interchange				
Series	Clearance	NSK	SKF	FAG
72xx, 73xx	Normal	BEAMRSUCNB	BECBY BECBM	BMPUA BMPUO
	Light	BEAMRSUGA	BEGAM	BMPUL

APPLICATIONS

› Metal Rolling Mills › Oil Field Equipment › Gear Boxes & Drives › Deep Well Pumps › Centrifugal Pumps
› Electric Motors & Generators › Blowers & Fans › Gear Reducers

BALL BEARINGS: 7200 SERIES

ANGULAR CONTACT, 40⁰ CONTACT ANGLE

Bearing Number	Nominal Bearing Dimensions						Preferred Shoulder Diameters					
	d		D		B		r**		da		Da	
									min		max	
	mm	inch	mm	inch	mm	inch	mm	inch	mm	inch	mm	inch
7200B	10	0.3937	30	1.1811	9	0.3543	0.6	0.023	15	0.591	25	0.984
7201BEA*	12	0.4724	32	1.2598	10	0.3937	0.6	0.023	17	0.669	27	1.063
7202BEA*	15	0.5906	35	1.3780	11	0.5331	0.6	0.023	20	0.787	30	1.181
7203BEA*	17	0.6693	40	1.5748	12	0.4724	0.6	0.023	22	0.866	35	1.378
7204BEA*	20	0.7874	47	1.8504	14	0.5512	1.0	0.039	26	1.024	41	1.614
7205BEA*	25	0.9843	52	2.0472	15	0.5906	1.0	0.039	31	1.220	46	1.811
7206BEA*	30	1.1811	62	2.4409	16	0.6299	1.0	0.039	36	1.417	56	2.205
7207BEA*	35	1.3780	72	2.8346	17	0.6693	1.1	0.043	42	1.654	65	2.559
7208BEA*	40	1.5748	80	3.1496	18	0.7087	1.1	0.043	47	1.850	73	2.874
7209BEA*	45	1.7717	85	3.3465	19	0.7480	1.1	0.043	52	2.047	78	3.071
7210BEA*	50	1.9685	90	3.5433	20	0.7874	1.1	0.043	57	2.244	83	3.268
7211BEA*	55	2.1654	100	3.9370	21	0.8268	1.5	0.059	64	2.520	91	3.583
7212BEA*	60	2.3622	110	4.3307	22	0.8661	1.5	0.059	69	2.717	101	3.976
7213BEA*	65	2.5591	120	4.7244	23	0.9005	1.5	0.059	74	2.913	111	4.370
7214BEA*	70	2.7559	125	4.9213	24	0.9449	1.5	0.059	79	3.110	116	4.567
7215BEA*	75	2.9528	130	5.1181	25	0.9843	1.5	0.059	84	3.307	121	4.764
7216BEA*	80	3.1496	140	5.5118	26	1.0236	2.0	0.078	90	3.543	130	5.118
7217B	85	3.3465	150	5.9055	28	1.1024	2.0	0.078	95	3.740	140	5.512
7218B	90	3.5433	160	6.2992	30	1.1811	2.0	0.078	100	3.937	150	5.906
7219B	95	3.7402	170	6.6929	32	1.2598	2.0	0.078	107	4.213	158	6.220
7220B	100	3.9370	180	7.0866	34	1.3386	2.0	0.078	112	4.409	168	6.614
7221B	105	4.1339	190	7.4803	36	1.4173	2.0	0.078	117	4.606	178	7.008
7222B	110	4.3307	200	7.8740	38	1.4961	2.0	0.078	122	4.803	188	7.402
7224B	120	4.7244	215	8.4646	40	1.5748	2.0	0.078	132	5.197	203	7.992
7226B	130	5.1181	230	9.0551	40	1.5748	2.5	0.098	144	5.669	216	8.504
7228B	140	5.5118	250	9.8425	42	1.6535	2.5	0.098	154	6.063	236	9.291
7230B	150	5.9055	270	10.6299	45	1.7717	2.5	0.098	164	6.457	256	10.079
7232B	160	6.2992	290	11.4173	48	1.8898	2.5	0.098	174	6.850	276	10.866
7234B	170	6.6929	310	12.2047	52	2.0472	3.0	0.118	188	7.402	292	11.496
7236B	180	7.0866	320	12.5984	52	2.0472	3.0	0.118	198	7.795	302	11.890
7238B	190	7.4803	340	13.3858	55	2.1654	3.0	0.118	208	8.189	322	12.677
7240B	200	7.8740	360	14.1732	58	2.2835	3.0	0.118	218	8.583	342	13.465

*Indicates NSK (HPS) High Performance Standard bearing.. **Maximum fillet which corner radius of bearing will clear.

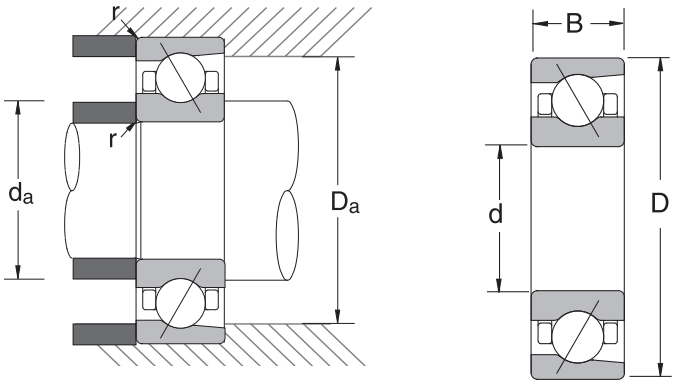

Common Options	
B	40° Contact Angle
C**	15° Contact Angle
TY	Polyamide Cage
Y	Pressed Brass Cage
M	Machined Brass Cage
W	Pressed Steel Cage
G	Flush Ground Faces
PC	Flush Ground Faces Normal Axial Clearance and ABEC6

**Load and speed ratings are not shown in the table below.

Bearing Number	Basic Load Ratings				Limiting Speeds (RPM)		Bearing Weight (Approx.)	
	C_r		C_{or}					
	N	lbs	N	lbs	Grease	Oil	kg	lbs
7200B	4650	1040	2250	505	16000	22000	0.032	0.07
7201BEA*	8150	1830	3750	840	20000	30000	0.038	0.08
7202BEA*	9800	2200	4800	1080	18000	26000	0.046	0.11
7203BEA*	11600	2600	6100	1380	16000	22000	0.068	0.15
7204BEA*	15600	3500	8150	1830	13000	19000	0.109	0.24
7205BEA*	17600	3950	10200	2300	12000	17000	0.133	0.30
7206BEA*	23700	5350	14300	3200	10000	14000	0.202	0.46
7207BEA*	32500	7350	19600	4400	8500	12000	0.294	0.65
7208BEA*	38500	8650	24500	5500	7500	11000	0.383	0.84
7209BEA*	40500	9050	27100	6100	7100	10000	0.421	0.95
7210BEA*	42000	9450	29700	6700	6300	9500	0.477	1.07
7211BEA*	51500	11600	37000	8350	6000	8500	0.627	1.40
7212BEA*	61500	13900	45000	10200	5300	7500	0.815	1.81
7213BEA*	70000	15700	53500	12000	4800	7100	1.05	2.20
7214BEA*	75500	17000	58500	13200	4500	6700	1.14	2.42
7215BEA*	78500	17700	63500	14200	4300	6300	1.22	3.02
7216BEA*	87500	19700	70000	15700	4000	6000	1.49	3.68
7217B	89000	20100	76000	17100	2800	3800	1.87	4.58
7218B	102000	23000	88000	19800	2600	3400	2.29	5.62
7219B	111000	24900	94000	21100	2400	3200	2.74	6.83
7220B	124000	28000	107000	24000	2200	3000	3.28	8.15
7221B	136000	30500	120000	27000	2200	3000	3.92	9.70
7222B	147000	33000	135000	30500	2000	2800	4.58	11.40
7224B	165000	37000	162000	36500	1900	2600	6.26	13.70
7226B	171000	38500	175000	39500	1700	2400	7.10	15.40
7228B	197000	44500	213000	48000	1600	2200	8.94	19.40
7230B	225000	50500	254000	57000	1500	2000	11.20	24.20
7232B	238000	53500	279000	62500	1500	2000	14.20	30.20
7234B	266000	60000	325000	73500	1300	1700	17.60	37.50
7236B	276000	62000	350000	78500	1200	1700	18.40	39.00
7238B	284000	64000	375000	84000	1100	1600	22.50	47.00
7240B	305000	68500	410000	91500	1100	1500	26.60	55.80

C_r = Dynamic Radial Load Rating C_{or} = Static Radial Load Rating

*Indicates NSK (HPS) High Performance Standard bearing.

BALL BEARINGS: 7300 SERIES

ANGULAR CONTACT, 40⁰ CONTACT ANGLE

Bearing Number	Nominal Bearing Dimensions						Preferred Shoulder Diameters					
	d		D		B		r**		da		Da	
									min		max	
	mm	inch	mm	inch	mm	inch	mm	inch	mm	inch	mm	inch
7300B	10	0.3937	35	1.3780	11	0.4331	0.6	0.023	15	0.591	30	1.181
7301BEA*	12	0.4724	37	1.4567	12	0.4724	1.0	0.039	18	0.709	31	1.220
7302BEA*	15	0.5906	42	1.6535	13	0.5118	1.0	0.039	21	0.827	36	1.417
7303BEA*	17	0.6693	47	1.8504	14	0.5512	1.0	0.039	23	0.906	41	1.614
7304BEA*	20	0.7874	52	2.0472	15	0.5906	1.1	0.043	27	1.063	45	1.772
7305BEA*	25	0.9843	62	2.4409	17	0.6693	1.1	0.043	32	1.260	55	2.165
7306BEA*	30	1.1811	72	2.8346	19	0.7480	1.1	0.043	37	1.457	65	2.559
7307BEA*	35	1.3780	80	3.1496	21	0.8268	1.5	0.059	44	1.732	71	2.795
7308BEA*	40	1.5748	90	3.5433	23	0.9055	1.5	0.059	49	1.929	81	3.189
7309BEA*	45	1.7717	100	3.9370	25	0.9843	1.5	0.059	54	2.126	91	3.583
7310BEA*	50	1.9685	110	4.3307	27	1.0630	2.0	0.078	60	2.362	100	3.937
7311BEA*	55	2.1654	120	4.7244	29	1.1417	2.0	0.078	65	2.559	110	4.331
7312BEA*	60	2.3622	130	5.1181	31	1.2205	2.1	0.082	72	2.835	118	4.646
7313BEA*	65	2.5591	140	5.5118	33	1.2992	2.1	0.082	77	3.031	128	5.039
7314BEA*	70	2.7559	150	5.9055	35	1.3780	2.1	0.082	82	3.228	138	5.433
7315BEA*	75	2.9528	160	6.2992	37	1.4567	2.1	0.082	87	3.425	148	5.827
7316BEA*	80	3.1496	170	6.6929	39	1.5354	2.1	0.082	92	3.622	158	6.220
7317B	85	3.3465	180	7.0866	41	1.6142	2.5	0.098	99	3.898	166	6.535
7318B	90	3.5433	190	7.4803	43	1.6929	2.5	0.098	104	4.094	176	6.929
7319B	95	3.7402	200	7.8740	45	1.7717	2.5	0.098	109	4.291	186	7.323
7320B	100	3.9370	215	8.4646	47	1.8504	2.5	0.098	114	4.488	201	7.913
7321B	105	4.1339	225	8.8583	49	1.9291	2.5	0.098	119	4.685	211	8.307
7322B	110	4.3307	240	9.4488	50	1.9685	2.5	0.098	124	4.882	226	8.898
7324B	120	4.7244	260	10.2362	55	2.1654	2.5	0.098	134	5.276	246	9.685
7326B	130	5.1181	280	11.0236	58	2.2835	3.0	0.118	148	5.827	262	10.315
7328B	140	5.5118	300	11.8110	62	2.4409	3.0	0.118	158	6.220	282	11.102
7330B	150	5.9055	320	12.5984	65	2.5591	3.0	0.118	168	6.614	302	11.890
7332B	160	6.2992	340	13.3858	68	2.6772	3.0	0.118	178	7.008	322	12.677
7334B	170	6.6929	360	14.1732	72	2.8346	3.0	0.118	188	7.402	342	13.465
7336B	180	7.0866	380	14.9606	75	2.9528	3.0	0.118	198	7.795	362	14.252
7338B	190	7.4803	400	15.7480	78	3.0709	4.0	0.157	212	8.346	378	14.882
7340B	200	7.8740	420	16.5354	80	3.1496	4.0	0.157	222	8.740	398	15.669

*Indicates NSK (HPS) High Performance Standard bearing. **Maximum fillet which corner radius of bearing will clear.

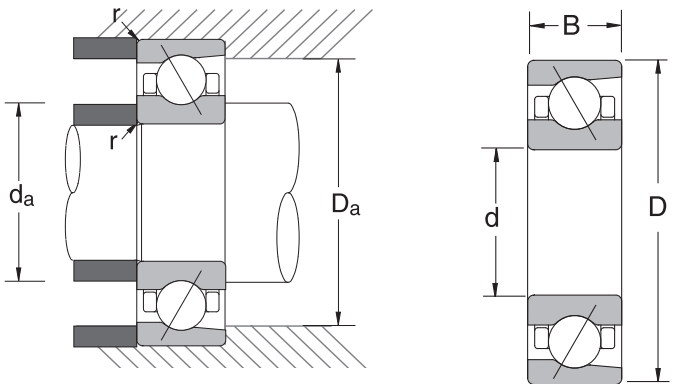

Common Options	
B	40⁰ Contact Angle
C**	15⁰ Contact Angle
TY	Polyamide Cage
Y	Pressed Brass Cage
M	Machined Brass Cage
W	Pressed Steel Cage
G	Flush Ground Faces
PC	Flush Ground Faces Normal Axial Clearance and ABEC6

**Load and speed ratings are not shown in the table below.

Bearing Number	Basic Load Ratings				Limiting Speeds (RPM)		Bearing Weight (Approx.)	
	C_r		C_{or}					
	N	lbs	N	lbs	Grease	Oil	kg	lbs
7300B	8750	1970	4050	910	14000	20000	0.054	0.12
7301BEA*	11100	2490	4950	1110	18000	26000	0.061	0.14
7302BEA*	14300	3200	6900	1550	16000	22000	0.084	0.19
7303BEA*	16800	3800	8300	1870	14000	20000	0.113	0.26
7304BEA*	19800	4450	10500	2350	13000	18000	0.149	0.33
7305BEA*	27200	6100	14900	3350	10000	15000	0.229	0.54
7306BEA*	36500	8150	20600	4650	9000	13000	0.336	0.79
7307BEA*	40500	9050	24400	5500	8000	11000	0.451	1.05
7308BEA*	53000	12000	33000	7400	7100	10000	0.619	1.45
7309BEA*	62500	14100	39500	8900	6300	9000	0.823	1.93
7310BEA*	78000	17600	50500	11300	5600	8000	1.07	2.53
7311BEA*	89000	20100	58500	13200	5000	7500	1.36	3.35
7312BEA*	102000	23000	68500	15400	4800	6700	1.70	4.41
7313BEA*	114000	25500	77000	17400	4300	6300	2.09	5.44
7314BEA*	124000	27800	87500	19700	4000	6000	2.53	6.61
7315BEA*	134000	30000	98500	22100	3800	5600	3.19	7.93
7316BEA*	144000	32500	110000	24700	3600	5300	3.79	9.37
7317B	137000	31000	112000	25100	2400	3200	4.42	11.1
7318B	148000	33000	124000	27900	2200	3000	5.17	12.9
7319B	158000	35500	137000	30500	2200	3000	5.98	14.9
7320B	190000	43000	178000	40000	2000	2800	7.43	18.3
7321B	191000	43000	177000	40000	1900	2600	9.43	20.7
7322B	201000	45500	197000	44500	1800	2400	11.2	24.5
7324B	225000	50500	231000	52000	1600	2200	14.4	31.5
7326B	250000	56000	268000	60500	1500	2000	17.6	38.3
7328B	275000	62000	310000	69500	1400	1900	21.6	46.9
7330B	289000	65000	340000	76500	1300	1800	25.9	55.8
7332B	315000	71000	385000	87000	1200	1700	30.8	65.7
7334B	355000	80000	445000	100000	1100	1600	35.6	78.2
7336B	375000	84000	490000	110000	1100	1500	42.6	90.4
7338B	410000	92500	550000	123000	1000	1400	47.2	104.0
7340B	430000	97000	600000	135000	950	1300	55.3	117.0

C_r = Dynamic Radial Load Rating C_{or} = Static Radial Load Rating
*Indicates NSK (HPS) High Performance Standard bearing.

BALL BEARINGS: 7400 SERIES

ANGULAR CONTACT, 40⁰ CONTACT ANGLE

Bearing Number	Nominal Bearing Dimensions						Preferred Shoulder Diameters					
	d		D		B		r*		da		Da	
									min		max	
	mm	inch	mm	inch	mm	inch	mm	inch	mm	inch	mm	inch
7405B	25	0.9843	80	3.1496	21	0.8268	1.5	0.059	34	1.339	71	2.795
7406B	30	1.1811	90	3.5433	23	0.9055	1.5	0.059	39	1.535	81	3.189
7407B	35	1.3780	100	3.9370	25	0.9843	1.5	0.059	44	1.732	91	3.583
7408B	40	1.5748	110	4.3307	27	1.0630	2.0	0.078	50	1.969	100	3.937
7409B	45	1.7717	120	4.7244	29	1.1417	2.0	0.078	55	2.165	110	4.331
7410B	50	1.9685	130	5.1181	31	1.2205	2.1	0.082	62	2.441	118	4.646
7411B	55	2.1654	140	5.5118	33	1.2992	2.1	0.082	67	2.638	128	5.039
7412B	60	2.3622	150	5.9055	35	1.3780	2.1	0.082	72	2.835	138	5.433
7413B	65	2.5591	160	6.2992	37	1.4567	2.1	0.082	77	3.031	148	5.827
7414B	70	2.7559	180	7.0866	42	1.6535	3.0	0.118	84	3.307	166	6.535
7415B	75	2.9528	190	7.4803	45	1.7717	3.0	0.118	89	3.504	176	6.929
7416B	80	3.1496	200	7.8740	48	1.8898	3.0	0.118	94	3.701	186	7.323
7420B[1]	100	3.9370	250	9.8425	58	2.2835	4.0	0.157	118	4.646	232	9.134

*Maximum fillet which corner radius of bearing will clear.

[1]NSK part number 7420 conforms to ISO and ABMA standards. Part number 7420 of other manufacturers may be equivalent to NSK A7420.

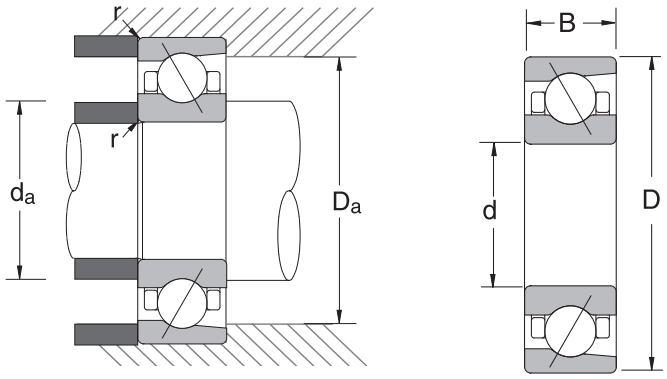

Common Options	
B	40⁰ Contact Angle
C**	15⁰ Contact Angle
TY	Polyamide Cage
Y	Pressed Brass Cage
M	Machined Brass Cage
W	Pressed Steel Cage
G	Flush Ground Faces
PC	Flush Ground Faces Normal Axial Clearance and ABEC6

**Load and speed ratings are not shown in the table below.

Bearing Number	Basic Load Ratings				Limiting Speeds (RPM)		Bearing Weight (Approx.)	
	C_r		C_{or}					
	N	lbs	N	lbs	Grease	Oil	kg	lbs
7405B	43500	9750	23700	5300	7600	10500	0.635	1.4
7406B	48000	10700	28200	6350	6700	9200	1.32	2.9
7407B	56000	12600	34000	7650	5900	8200	1.36	3.0
7408B	65000	14600	40000	9050	5300	7300	1.41	3.1
7409B	74000	16700	47000	10600	4900	6700	1.77	3.9
7410B	84000	18900	54500	12200	4500	6000	2.18	4.8
7411B	103000	23100	68500	15400	4100	5600	2.63	5.8
7412B	111000	25000	77500	17400	3800	5200	3.18	7.0
7413B	120000	27000	86500	19500	3500	4900	3.81	8.4
7414B	148000	33500	118000	26500	3200	4400	4.72	10.4
7415B	168000	38000	140000	31500	3000	4100	5.72	12.6
7416B	168000	38000	143000	32000	2800	3900	7.57	16.7
7420B[1]	222000	50000	213000	48000	2200	3100	15.0	33.0

C_r = Dynamic Radial Load Rating C_{or} = Static Radial Load Rating

[1]NSK part number 7420 conforms to ISO and ABMA standards. Part number 7420 of other manufacturers may be equivalent to NSK A7420.

NSK
NSK

CYLINDRICAL ROLLER BEARINGS

Nomenclature C-1

Applications C-1

Interchange C-2

Internal Clearance C-3

200 Series C-5

300 Series C-11

400 Series C-17

1000 Series C-19

2200 Series C-23

2300 Series C-25

CYLINDRICAL ROLLER BEARINGS

Basic Type
- **N:** Single Row, No Flanges on Outer Ring
- **NU:** Single Row, No Flanges on Inner Ring
- **NJ:** Single Row, One Flange on Inner Ring
- **NUP:** Single Row, One Flange Inner with Retaining Ring
- **NF:** Single Row, One Flange on Outer Ring
- **NH:** Single Row, One Flange Inner with Stabilizing Ring
- **NN/NNU:** Double Row, Flanges Outer/Flanges Inner

Bore Size
(04 and up: multiply last two numbers by 5 to get bore in mm)

00:	10 mm	**04:**	20 mm
01:	12 mm	**05:**	25 mm
02:	15 mm	**12:**	60 mm
03:	17 mm	**20:**	100 mm

Cage Option
- **M:** Machined Brass
- **W/WS:** Pressed Steel
- **T:** Polyamide 6-6 Resin (only available with type "E" high capacity bearings)
- **T7:** L-PPS Resin

- **E:** Electric Motor Quality

STF	NJ	3	20	E	M	C3	E

Material Prefix
- **HTF:** High Tough
- **STF:** Super Tough
- **WTF:** Water Tough
- **Blank:** Standard Materials

Series
- **2:** Light
- **3:** Medium
- **4:** Heavy
- **10:** Extra Light
- **22:** Light, Wide
- **23:** Medium, Wide

Internal Design
- **Blank:** Standard Design
- **E:** High Capacity Design

Internal Clearance
- **C2:** Tight
- **Blank:** Normal
- **C3:** Greater than Normal
- **C4:** Greater than C3

Please refer to the bearing tables for exact part number options.

APPLICATIONS

› Traction Motors (NH and NU) › Electric Motors, medium to large size
› Pumps and Compressors (Centrifugal Pump, Deepwell Pump, Slurry Pump, Screw Compressor) › Plastic Forming Equipment
› Blowers and Fans › Gears and Drives › Coal Pulverizers (NN) › Construction Equipment › Heavy Equipment
› Machine Tool Spindle › Calender Rolls of Paper Making Machines › Transmissions › Printing Presses › Mold Oscillator Tables
› Continuous Casters › Turbines › Crushers › Journal Boxes › Speed Reducers › Table Rollers for Steel Mills
› Oil Field Equipment (Pump Jack)

Cylindrical roller bearings are designed to carry heavy radial loads and are suitable for high speed applications. Their rolling elements are ground to provide maximum contact with the raceway and are precisely crowned to avoid edge loading due to shaft misalignment.

NU style bearings have two machined flanges on the outer ring and no flanges on the inner ring. The rollers and cages are assembled in the outer ring. Because there are no flanges in the inner ring, this bearing cannot carry an axial load.

N style bearings have two machined flanges on the inner ring and no flanges on the outer ring, with rollers and cage on the inner ring. Like the NU style, the N has no axial load carrying capability.

NJ style bearings have two machined flanges on the outer ring and a machined flange on one side of the inner ring. The roller and cage assembly is in the outer ring. The integral flange on the inner ring allows this bearing to carry a small axial load in one direction.

NF style bearings have two machined flanges on the inner ring and one flange on the outer ring, with roller and cage on the inner ring. Like the NJ bearing, these bearings can carry a small axial load in one direction.

NH style bearings are created by combining an **NJ** style bearing with an **HJ** thrust collar. Mounted on the non-flange side of the inner ring, the thrust collar allows the bearing to carry a small axial load in both directions. The addition of the HJ collar increases the width of the bearing. Contact NSK for dimensions of the thrust collar and for preferred shoulder diameters. Bearings of this style may be designated as either an NH or NJ+HJ part number.

NUP style bearings have two machined flanges on the outer ring and a machined flange on one side of the inner ring. A special-design inner ring allows use of a stabilizing ring on the non-flange side. As a result, these bearings can carry a small axial load in both directions. The roller and cage assembly is mounted in the outer ring.

Double Row cylindrical roller bearings are denoted by two N's within the part number (e.g., **NN** or **NNU**). The dimensions for these can be found in the Super Precision section of this catalog and can be ordered with standard precision.

INTERCHANGE

Description		Interchange		
		NSK	SKF	FAG
Part Number Prefix	Single Row, No Flanges on Outer Ring	N	N	N
	Single Row, No Flanges on Inner Ring	NU	NU	NU
	Single Row, 1 Flange Inner	NJ	NJ	NJ
	Single Row, 1 Flange Outer	NF	NF	--
	Single Row, 1 Flange Inner with Retaining Ring	NUP	NUP	NUP
	Single Row, 1 Flange Inner with Stabilizing Ring	NH	NH	NH
	Stabilizing Ring	HJ	HJ	HJ
	Double Row, Flanges Outer/Flanges Inner	NNU/NN	NNU/NN	NNU/NN
Part Number	Light	2xx	2xx	2xx
	Medium	3xx	3xx	3xx
	Heavy	4xx	4xx	4xx
	Extra Light	10xx	10xx	10xx
	Light, Wide	22xx	22xx	22xx
	Medium, Wide	23xx	23xx	23xx
Part Number Suffix	Polyamide Cage	T	P	TVP2
	Composite High Temp Cage	T7	--	--
	Machined Brass Cage	M	M	M, M1
	Pressed Steel Cage	W,WS	J	JP1
	High Capacity Design	E	EC	E
	Full Complement (No Cage)	V	V	V
	Tight Clearance	C2	C2	C2
	Normal Clearance	BLANK	BLANK	BLANK
	Greater than Normal Clearance	C3	C3	C3
	Greater than C3 Clearance	C4	C4	C4

The competitive manufacturers are provided for a convenient source of unit substitution. They can be considered interchangeable in most instances, but for special applications, please contact NSK. NSK assumes no liability with respect to errors or omissions.

RADIAL INTERNAL CLEARANCES IN CYLINDRICAL ROLLER BEARINGS WITH CYLINDRICAL BORES

Units: inch

Nominal Bore Diameter d (mm)		Clearances in Interchangeable Bearings with Cylindrical Bores										Clearances in Matched Bearings with Cylindrical Bores [2]											
		C2		C0		C3		C4		C5		CC1		CC2		CC[1]		CC3		CC4		CC5	
over	incl.	min	max	min	max	min	max	min	max	min	max	min	max	min	max	min	max	min	max	min	max	min	max
0	10	.0000	.0010	.0008	.0018	.0014	.0024	.0020	.0030	-	-	-	-	-	-	-	-	-	-	-	-	-	-
10	24	.0000	.0010	.0008	.0018	.0014	.0024	.0020	.0030	.0026	.0035	.0002	.0006	.0004	.0008	.0008	.0012	.0014	.0018	.0018	.0022	.0026	.0030
24	30	.0000	.0010	.0008	.0018	.0014	.0024	.0020	.0030	.0028	.0037	.0002	.0006	.0004	.0010	.0010	.0014	.0016	.0020	.0020	.0024	.0028	.0031
30	40	.0002	.0012	.0010	.0020	.0018	.0028	.0024	.0033	.0031	.0041	.0002	.0006	.0005	.0010	.0010	.0016	.0018	.0022	.0022	.0028	.0031	.0037
40	50	.0002	.0014	.0012	.0024	.0020	.0031	.0028	.0039	.0037	.0049	.0002	.0007	.0006	.0012	.0012	.0018	.0020	.0026	.0026	.0031	.0037	.0043
50	65	.0004	.0016	.0016	.0028	.0024	.0035	.0031	.0043	.0039	.0055	.0002	.0008	.0006	.0014	.0014	.0020	.0022	.0030	.0030	.0035	.0043	.0051
65	80	.0004	.0018	.0016	.0030	.0026	.0039	.0035	.0049	.0051	.0065	.0004	.0010	.0008	.0016	.0016	.0024	.0028	.0035	.0035	.0043	.0051	.0059
80	100	.0006	.0020	.0020	.0033	.0030	.0043	.0041	.0055	.0061	.0075	.0004	.0012	.0010	.0018	.0018	.0028	.0031	.0041	.0041	.0049	.0061	.0071
100	120	.0006	.0022	.0020	.0035	.0033	.0049	.0049	.0065	.0071	.0087	.0004	.0012	.0010	.0020	.0020	.0031	.0037	.0047	.0047	.0057	.0071	.0081
120	140	.0006	.0024	.0024	.0041	.0039	.0057	.0057	.0075	.0079	.0096	.0004	.0014	.0012	.0024	.0024	.0035	.0041	.0053	.0053	.0063	.0079	.0091
140	160	.0008	.0028	.0028	.0047	.0045	.0065	.0065	.0085	.0089	.0108	.0004	.0014	.0014	.0026	.0026	.0039	.0045	.0059	.0059	.0071	.0089	.0102
160	180	.0010	.0030	.0030	.0049	.0047	.0067	.0067	.0087	.0098	.0118	.0004	.0016	.0014	.0030	.0030	.0043	.0049	.0065	.0065	.0079	.0098	.0112
180	200	.0014	.0035	.0035	.0057	.0055	.0077	.0077	.0098	.0108	.0130	.0006	.0018	.0016	.0031	.0031	.0047	.0055	.0071	.0071	.0087	.0108	.0124
200	225	.0018	.0041	.0041	.0065	.0063	.0087	.0087	.0110	.0120	.0144	.0006	.0020	.0018	.0035	.0035	.0053	.0061	.0079	.0079	.0094	.0120	.0138
225	250	.0018	.0043	.0043	.0069	.0067	.0093	.0093	.0118	.0130	.0156	.0006	.0020	.0020	.0039	.0039	.0059	.0067	.0085	.0085	.0104	.0130	.0150
250	280	.0022	.0049	.0049	.0077	.0075	.0102	.0102	.0130	.0146	.0173	.0008	.0022	.0022	.0043	.0043	.0065	.0073	.0094	.0094	.0116	.0146	.0165
280	315	.0022	.0051	.0051	.0081	.0079	.0108	.0108	.0138	.0161	.0191	.0008	.0024	.0024	.0047	.0047	.0071	.0081	.0104	.0104	.0128	.0161	.0185
315	355	.0026	.0057	.0057	.0089	.0089	.0120	.0120	.0152	.0179	.0211	.0008	.0026	.0026	.0053	.0053	.0079	.0089	.0116	.0116	.0142	.0179	.0205
355	400	.0039	.0075	.0075	.0110	.0110	.0146	.0146	.0181	.0201	.0236	.0010	.0030	.0030	.0059	.0059	.0089	.0100	.0130	.0130	.0159	.0201	.0230
400	450	.0043	.0083	.0083	.0122	.0122	.0161	.0161	.0201	.0222	.0262	.0010	.0033	.0033	.0067	.0067	.0100	.0112	.0146	.0146	.0179	.0222	.0256
450	500	.0043	.0087	.0087	.0130	.0130	.0173	.0173	.0217	.0246	.0289	.0010	.0037	.0037	.0075	.0075	.0112	.0124	.0161	.0161	.0199	.0246	.0283

Note: [1] CC is the symbol for normal clearance for matched cylindrical roller bearings and solid-type needle roller bearings.
[2] Matched bearings indicate that it is a matched assembly and the components are non-interchangable.

RADIAL INTERNAL CLEARANCES IN CYLINDRICAL ROLLER BEARINGS WITH TAPERED BORES

Units: inch

Nominal Bore Diameter d (mm)		Clearances in Matched Bearings with Tapered Bores [2]													
		CC9 [1]		CC1		CC2		CC		CC3		CC4		CC5	
over	incl.	min	max	min	max	min	max	min	max	min	max	min	max	min	max
10	24	.0002	.0004	.0004	.0008	.0008	.0012	.0014	.0018	.0018	.0022	.0022	.0026	.0030	.0033
24	30	.0002	.0004	.0004	.0010	.0010	.0014	.0016	.0020	.0020	.0024	.0024	.0028	.0031	.0037
30	40	.0002	.0005	.0005	.0010	.0010	.0016	.0018	.0022	.0022	.0028	.0028	.0031	.0037	.0043
40	50	.0002	.0006	.0006	.0012	.0012	.0018	.0020	.0026	.0026	.0031	.0031	.0037	.0043	.0049
50	65	.0002	.0006	.0006	.0014	.0014	.0020	.0022	.0030	.0030	.0035	.0035	.0043	.0051	.0059
65	80	.0004	.0008	.0008	.0016	.0016	.0024	.0028	.0035	.0035	.0043	.0043	.0051	.0059	.0067
80	100	.0004	.0010	.0010	.0018	.0018	.0028	.0031	.0041	.0041	.0049	.0049	.0059	.0071	.0081
100	120	.0004	.0010	.0010	.0020	.0020	.0031	.0037	.0047	.0047	.0057	.0057	.0067	.0081	.0091
120	140	.0006	.0012	.0012	.0024	.0024	.0035	.0041	.0053	.0053	.0063	.0063	.0075	.0091	.0102
140	160	.0006	.0014	.0014	.0026	.0026	.0039	.0045	.0059	.0059	.0071	.0071	.0085	.0102	.0116
160	180	.0006	.0014	.0014	.0030	.0030	.0043	.0049	.0065	.0065	.0079	.0079	.0094	.0112	.0126
180	200	.0008	.0016	.0016	.0031	.0031	.0047	.0055	.0071	.0071	.0087	.0087	.0102	.0124	.0140
200	225	.0008	.0018	.0018	.0035	.0035	.0053	.0061	.0079	.0079	.0094	.0094	.0112	.0138	.0156
225	250	.0010	.0020	.0020	.0039	.0039	.0059	.0067	.0085	.0085	.0104	.0104	.0124	.0150	.0169
250	280	.0010	.0022	.0022	.0043	.0043	.0065	.0073	.0094	.0094	.0116	.0116	.0138	.0165	.0187
280	315	.0012	.0024	.0024	.0047	.0047	.0071	.0081	.0104	.0104	.0128	.0128	.0152	.0185	.0209
315	355	.0012	.0026	.0026	.0053	.0053	.0079	.0089	.0116	.0116	.0142	.0142	.0169	.0205	.0230
355	400	.0014	.0030	.0030	.0059	.0059	.0089	.0100	.0130	.0130	.0159	.0159	.0189	.0230	.0260
400	450	.0016	.0033	.0033	.0067	.0067	.0100	.0112	.0146	.0146	.0179	.0179	.0213	.0256	.0289
450	500	.0018	.0037	.0037	.0075	.0075	.0112	.0124	.0161	.0161	.0199	.0199	.0236	.0283	.0321

Note: [1] Clearance CC9 is applicable to cylindrical roller bearings with tapered bores in ISO tolerance Classes 5 and 4.
[2] Matched bearings indicate that it is a matched assembly and the components are non-interchangable.

CYLINDRICAL ROLLER BEARING: 200 SERIES

NU, N, NJ, NUP, AND NF

Bearing Number	Available Styles					Boundary Dimensions						
						d	D	B	r_{min}	r_{1min}	F_W	E_W
						mm (in)	mm (in)	mm (in)	mm (in)	mm (in)	mm (in)	mm (in)
204				N	NF	20 (0.7874)	47 (1.8504)	14 (0.5512)	1 (0.0394)	0.6 (0.0237)		40.0 (1.5748)
204E	NU	NJ	NUP			20 (0.7874)	47 (1.8504)	14 (0.5512)	1 (0.0394)	0.6 (0.0237)	26.5 (1.0433)	
205				N	NF	25 (0.9843)	52 (2.0472)	15 (0.5906)	1 (0.0394)	0.6 (0.0237)		45.0 (1.7717)
205E*	NU	NJ	NUP			25 (0.9843)	52 (2.0472)	15 (0.5906)	1 (0.0394)	0.6 (0.0237)	31.5 (1.2402)	
206				N	NF	30 (1.1811)	62 (2.4409)	16 (0.6299)	1 (0.0394)	0.6 (0.0237)		53.5 (2.1063)
206E*	NU	NJ	NUP			30 (1.1811)	62 (2.4409)	16 (0.6299)	1 (0.0394)	0.6 (0.0237)	37.5 (1.4764)	
207				N	NF	35 (1.3780)	72 (2.8346)	17 (0.6693)	1.1 (0.0434)	0.6 (0.0237)		61.8 (2.4331)
207E*	NU	NJ	NUP			35 (1.3780)	72 (2.8346)	17 (0.6693)	1.1 (0.0434)	0.6 (0.0237)	44.0 (1.7323)	
208				N	NF	40 (1.5748)	80 (3.1496)	18 (0.7087)	1.1 (0.0434)	1.1 (0.0434)		70.0 (2.7559)
208E*	NU	NJ	NUP			40 (1.5748)	80 (3.1496)	18 (0.7087)	1.1 (0.0434)	1.1 (0.0434)	49.5 (1.9488)	
209				N	NF	45 (1.7717)	85 (3.3465)	19 (0.7480)	1.1 (0.0434)	1.1 (0.0434)		75.0 (2.9528)
209E*	NU	NJ	NUP			45 (1.7717)	85 (3.3465)	19 (0.7480)	1.1 (0.0434)	1.1 (0.0434)	54.5 (2.1457)	
210				N	NF	50 (1.9685)	90 (3.5433)	20 (0.7874)	1.1 (0.0434)	1.1 (0.0434)		80.4 (3.1654)
210E*	NU	NJ	NUP			50 (1.9685)	90 (3.5433)	20 (0.7874)	1.1 (0.0434)	1.1 (0.0434)	59.5 (2.3425)	
211				N	NF	55 (2.1654)	100 (3.9370)	21 (0.8268)	1.5 (0.0591)	1.1 (0.0434)		88.5 (3.4843)
211E*	NU	NJ	NUP			55 (2.1654)	100 (3.9370)	21 (0.8268)	1.5 (0.0591)	1.1 (0.0434)	66.0 (2.5984)	
212				N	NF	60 (2.3622)	110 (4.3307)	22 (0.8661)	1.5 (0.0591)	1.5 (0.0591)		97.5 (3.8386)
212E*	NU	NJ	NUP			60 (2.3622)	110 (4.3307)	22 (0.8661)	1.5 (0.0591)	1.5 (0.0591)	72.0 (2.8346)	
213				N	NF	65 (2.5591)	120 (4.7244)	23 (0.9055)	1.5 (0.0591)	1.5 (0.0591)		105.6 (4.1575)

*Indicates NSK (HPS) High Performance Standard bearing.

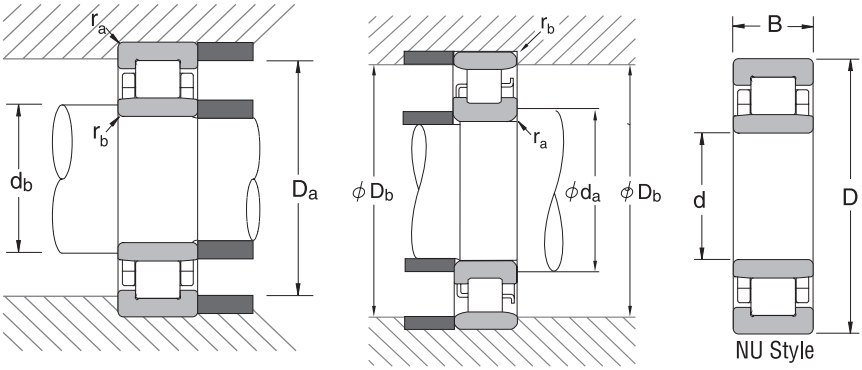

Common Options	
M	Machined Brass Cage
W	Pressed Steel Cage
ET	High Capacity Polyamide Cage
CO*	Normal Internal Clearance
C3	Greater than Normal Internal Clearance

*Not shown in part number

Bearing Number	Basic Load Ratings		Limiting Speeds (RPM)		Abutment and Fillet Dimensions										Bearing Weight (Approx.)
	C_r	C_{0r}			d_a (min)	d_b (min)	d_b (max)	d_c (min)	d_d (min)	D_a (max)	D_b (max)	D_b (min)	r_a** (max)	r_b** (max)	
	N (lbs)	N (lbs)	Grease	Oil	mm (in)	mm (in)	mm (in)	mm (in)	mm (in)	mm (in)	mm (in)	mm (in)	mm (in)	mm (in)	kg (lbs)
204	15400 (3450)	12700 (2850)	15000	18000	25.0 (0.984)						43.0 (1.693)	42 (1.654)	1.0 (0.039)	0.6 (0.023)	0.107 (0.24)
204E	25700 (5800)	22600 (5100)	13000	16000		24.0 (0.945)	25 (0.984)	29 (1.142)	32 (1.260)	42.0 (1.654)			1.0 (0.039)	0.6 (0.023)	0.107 (0.24)
205	17700 (4000)	15700 (3550)	13000	16000	30.0 (1.181)						48.0 (1.890)	46 (1.811)	1.0 (0.039)	0.6 (0.023)	0.135 (0.30)
205E*	33500 (7600)	27700 (6250)	12000	14000		29.0 (1.142)	30 (1.181)	34 (1.339)	37 (1.457)	47.0 (1.850)			1.0 (0.039)	0.6 (0.023)	0.136 (0.30)
206	24900 (5600)	23300 (5250)	11000	13000	35.0 (1.378)						58.0 (2.283)	56 (2.205)	1.0 (0.039)	0.6 (0.023)	0.208 (0.46)
206E*	45000 (10100)	37500 (8400)	9500	12000		34.0 (1.339)	36 (1.417)	40 (1.575)	44 (1.732)	57.0 (2.244)			1.0 (0.039)	0.6 (0.023)	0.205 (0.45)
207	35500 (8000)	34000 (7700)	9500	11000	41.5 (1.634)						68.0 (2.677)	64 (2.520)	1.0 (0.039)	0.6 (0.023)	0.301 (0.66)
207E*	58000 (13000)	50000 (11300)	8500	10000		39.0 (1.535)	42 (1.654)	46 (1.811)	50 (1.969)	65.5 (2.579)			1.0 (0.039)	0.6 (0.023)	0.304 (0.67)
208	43500 (9850)	43000 (9650)	8500	10000	46.5 (1.831)						73.5 (2.894)	72 (2.835)	1.0 (0.039)	1.0 (0.039)	0.375 (0.83)
208E*	64000 (14400)	55500 (12500)	7500	9000		46.5 (1.831)	48 (1.890)	52 (2.047)	56 (2.205)	73.5 (2.894)			1.0 (0.039)	1.0 (0.039)	0.379 (0.83)
209	46000 (10400)	47000 (10500)	7500	9000	51.5 (2.028)						78.5 (3.091)	77 (3.031)	1.0 (0.039)	1.0 (0.039)	0.429 (0.94)
209E*	72500 (16300)	66500 (14900)	6700	8000		51.5 (2.028)	52 (2.047)	57 (2.244)	61 (2.402)	78.5 (3.091)			1.0 (0.039)	1.0 (0.039)	0.438 (0.96)
210	48000 (10800)	51000 (11500)	7100	8500	56.5 (2.224)						83.5 (3.287)	82 (3.228)	1.0 (0.039)	1.0 (0.039)	0.483 (1.06)
210E*	79500 (17900)	76500 (17200)	6300	7500		56.5 (2.224)	57 (2.244)	62 (2.441)	67 (2.638)	83.5 (3.287)			1.0 (0.039)	1.0 (0.039)	0.500 (1.10)
211	58000 (13000)	62500 (14000)	6300	7500	63.0 (2.480)						93.5 (3.681)	91 (3.583)	1.5 (0.059)	1.0 (0.039)	0.634 (1.39)
211E*	99000 (22300)	98500 (22200)	5600	7100		61.5 (2.421)	64 (2.520)	68 (2.677)	73 (2.874)	92.0 (3.622)			1.5 (0.059)	1.0 (0.039)	0.669 (1.47)
212	68500 (15400)	75000 (16800)	6000	7100	68.0 (2.677)						102.0 (4.016)	100 (3.937)	1.5 (0.059)	1.5 (0.059)	0.823 (1.81)
212E*	112000 (25200)	107000 (24100)	5300	6300		68.0 (2.677)	70 (2.756)	75 (2.953)	80 (3.150)	102.0 (4.016)			1.5 (0.059)	1.5 (0.059)	0.824 (1.81)
213	84000 (18900)	94500 (21200)	5300	6300	73.0 (2.874)						112.0 (4.409)	108 (4.252)	1.5 (0.059)	1.5 (0.059)	1.05 (2.31)

C_r = Dynamic Radial Load Rating C_{or} = Static Radial Load Rating **Maximum fillet which corner radius of bearing will clear.

CYLINDRICAL ROLLER BEARING: 200 SERIES (CONT.)

NU, N, NJ, NUP, AND NF

Bearing Number	Available Styles					Boundary Dimensions						
						d	D	B	r_{min}	r_{1min}	F_w	E_w
						mm (in)	mm (in)	mm (in)	mm (in)	mm (in)	mm (in)	mm (in)
213E*	NU	NJ	NUP			65 (2.5591)	120 (4.7244)	23 (0.9055)	1.5 (0.0591)	1.5 (0.0591)	78.5 (3.0906)	
214				N	NF	70 (2.7559)	125 (4.9213)	24 (0.9449)	1.5 (0.0591)	1.5 (0.0591)		110.5 (4.3504)
214E*	NU	NJ	NUP			70 (2.7559)	125 (4.9213)	24 (0.9449)	1.5 (0.0591)	1.5 (0.0591)	83.5 (3.2874)	
215				N	NF	75 (2.9528)	130 (5.1181)	25 (0.9843)	1.5 (0.0591)	1.5 (0.0591)		116.5 (4.5866)
215E*	NU	NJ	NUP			75 (2.9528)	130 (5.1181)	25 (0.9843)	1.5 (0.0591)	1.5 (0.0591)	88.5 (3.4843)	
216				N	NF	80 (3.1496)	140 (5.5118)	26 (1.0236)	2 (0.0788)	2 (0.0788)		125.3 (4.9331)
216E*	NU	NJ	NUP			80 (3.1496)	140 (5.5118)	26 (1.0236)	2 (0.0788)	2 (0.0788)	95.3 (3.7520)	
217				N	NF	85 (3.3465)	150 (5.9055)	28 (1.1024)	2 (0.0788)	2 (0.0788)		133.8 (5.2677)
217E*	NU	NJ	NUP			85 (3.3465)	150 (5.9055)	28 (1.1024)	2 (0.0788)	2 (0.0788)	100.5 (3.9567)	
218				N	NF	90 (3.5433)	160 (6.2992)	30 (1.1811)	2 (0.0788)	2 (0.0788)		143.0 (5.6299)
218E*	NU	NJ	NUP			90 (3.5433)	160 (6.2992)	30 (1.1811)	2 (0.0788)	2 (0.0788)	107.0 (4.2126)	
219				N	NF	95 (3.7402)	170 (6.6929)	32 (1.2598)	2.1 (0.0827)	2.1 (0.0827)		151.5 (5.9646)
219E*	NU	NJ	NUP			95 (3.7402)	170 (6.6929)	32 (1.2598)	2.1 (0.0827)	2.1 (0.0827)	112.5 (4.4291)	
220				N	NF	100 (3.9370)	180 (7.0866)	34 (1.3386)	2.1 (0.0827)	2.1 (0.0827)		160.0 (6.2992)
220E*	NU	NJ	NUP			100 (3.9370)	180 (7.0866)	34 (1.3386)	2.1 (0.0827)	2.1 (0.0827)	119.0 (4.6850)	
221				N	NF	105 (4.1339)	190 (7.4803)	36 (1.4173)	2.1 (0.0827)	2.1 (0.0827)		168.8 (6.6457)
221E*	NU	NJ	NUP			105 (4.1339)	190 (7.4803)	36 (1.4173)	2.1 (0.0827)	2.1 (0.0827)	125.0 (4.9213)	
222				N	NF	110 (4.3307)	200 (7.8740)	38 (1.4961)	2.1 (0.0827)	2.1 (0.0827)		178.5 (7.0276)
222E*	NU	NJ	NUP			110 (4.3307)	200 (7.8740)	38 (1.4961)	2.1 (0.0827)	2.1 (0.0827)	132.5 (5.2165)	

*Indicates NSK (HPS) High Performance Standard bearing.

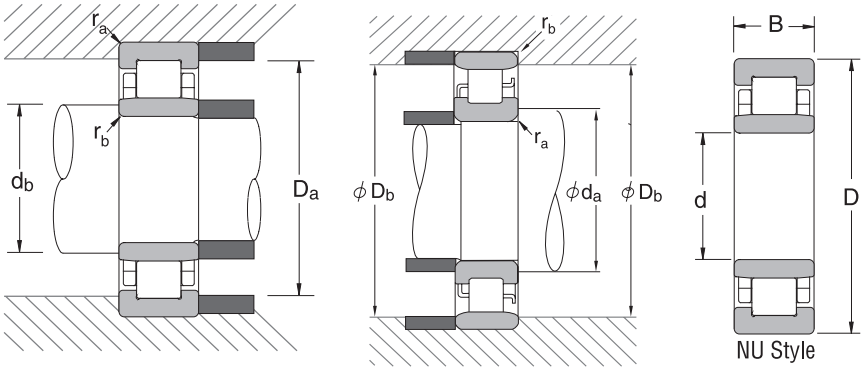

Common Options	
M	Machined Brass Cage
W	Pressed Steel Cage
ET	High Capacity Polyamide Cage
CO*	Normal Internal Clearance
C3	Greater than Normal Internal Clearance

*Not shown in part number

Bearing Number	Basic Load Ratings		Limiting Speeds (RPM)		Abutment and Fillet Dimensions										Bearing Weight (Approx.)
	C_r	C_{0r}			d_a (min)	d_b (min)	d_b (max)	d_c (min)	d_d (min)	D_a (max)	D_b (max)	D_b (min)	r_a** (max)	r_b** (max)	
	N (lbs)	N (lbs)	Grease	Oil	mm (in)	mm (in)	mm (in)	mm (in)	mm (in)	mm (in)	mm (in)	mm (in)	mm (in)	mm (in)	kg (lbs)
213E*	124000 (27800)	119000 (26700)	4800	5600		73.0 (2.874)	76 (2.992)	81 (3.189)	87 (3.425)	112.0 (4.409)			1.5 (0.059)	1.5 (0.059)	1.05 (2.31)
214	83500 (18800)	95000 (21400)	5000	6300	78.0 (3.071)						117.0 (4.606)	113 (4.449)	1.5 (0.059)	1.5 (0.059)	1.14 (2.51)
214E*	136000 (30500)	137000 (31000)	5000	6300		78.0 (3.071)	81 (3.189)	86 (3.386)	92 (3.622)	117.0 (4.606)			1.5 (0.059)	1.5 (0.059)	1.29 (2.84)
215	96500 (21700)	111000 (24900)	4800	6000	83.0 (3.268)						122.0 (4.803)	119 (4.685)	1.5 (0.059)	1.5 (0.059)	1.23 (2.71)
215E*	150000 (33500)	156000 (35000)	4800	6000		83.0 (3.268)	86 (3.386)	90 (3.543)	96 (3.780)	122.0 (4.803)			1.5 (0.059)	1.5 (0.059)	1.44 (3.17)
216	106000 (23900)	122000 (27500)	4500	5300	89.0 (3.504)						131.0 (5.157)	128 (5.039)	2.0 (0.078)	2.0 (0.078)	1.47 (3.23)
216E*	160000 (36000)	167000 (37500)	4500	5300		89.0 (3.504)	92 (3.622)	97 (3.819)	104 (4.094)	131.0 (5.157)			2.0 (0.078)	2.0 (0.078)	1.7 (3.74)
217	120000 (27100)	140000 (31500)	4300	5000	94.0 (3.701)						141.0 (5.551)	137 (5.394)	2.0 (0.078)	2.0 (0.078)	1.87 (4.11)
217E*	192000 (43000)	199000 (44500)	4300	5000		94.0 (3.701)	98 (3.858)	104 (4.094)	110 (4.331)	141.0 (5.551)			2.0 (0.078)	2.0 (0.078)	2.11 (4.64)
218	152000 (34000)	178000 (40000)	4000	4800	99.0 (3.898)						151.0 (5.945)	146 (5.748)	2.0 (0.078)	2.0 (0.078)	2.31 (5.08)
218E*	205000 (46000)	217000 (49000)	4000	4800		99.0 (3.898)	104 (4.094)	109 (4.291)	116 (4.567)	151.0 (5.945)			2.0 (0.078)	2.0 (0.078)	2.6 (5.72)
219	166000 (37000)	195000 (44000)	3800	4500	106.0 (4.173)						159.0 (6.260)	155 (6.102)	2.0 (0.078)	2.0 (0.078)	2.79 (6.14)
219E*	249000 (56000)	265000 (59500)	3800	4500		106.0 (4.173)	110 (4.331)	116 (4.567)	123 (4.843)	159.0 (6.260)			2.0 (0.078)	2.0 (0.078)	3.17 (6.97)
220	183000 (41000)	217000 (49000)	3600	4300	111.0 (4.370)						169.0 (6.654)	163 (6.417)	2.0 (0.078)	2.0 (0.078)	3.36 (7.39)
220E*	305000 (68500)	305000 (68500)	3600	4300		111.0 (4.370)	116 (4.567)	122 (4.803)	130 (5.118)	169.0 (6.654)			2.0 (0.078)	2.0 (0.078)	3.81 (8.38)
221	201000 (45000)	241000 (54000)	3400	4000	116.0 (4.567)						179.0 (7.047)	172 (6.772)	2.0 (0.078)	2.0 (0.078)	4.00 (8.80)
221E*	320000 (71900)	310000 (70000)	3400	4000		116.0 (4.567)	121 (4.764)	129 (5.079)	137 (5.394)	179.0 (7.047)			2.0 (0.078)	2.0 (0.078)	4.58 (10.1)
222	229000 (51500)	272000 (61000)	3200	3800	121.0 (4.764)						189.0 (7.441)	182 (7.165)	2.0 (0.078)	2.0 (0.078)	4.64 (10.2)
222E*	360000 (80900)	365000 (82000)	3200	3800		121.0 (4.764)	129 (5.079)	135 (5.315)	144 (5.669)	189.0 (7.441)			2.0 (0.078)	2.0 (0.078)	5.37 (11.8)

C_r = Dynamic Radial Load Rating C_{or} = Static Radial Load Rating **Maximum fillet which corner radius of bearing will clear.

CYLINDRICAL ROLLER BEARING: 200 SERIES (CONT.)

NU, N, NJ, NUP, AND NF

Bearing Number	Available Styles					Boundary Dimensions						
						d	D	B	r_{min}	r_{1min}	F_w	E_w
						mm (in)	mm (in)	mm (in)	mm (in)	mm (in)	mm (in)	mm (in)
224				N	NF	120 (4.7244)	215 (8.4646)	40 (1.5748)	2.1 (0.0827)	2.1 (0.0827)		191.5 (7.5394)
224E*	NU	NJ	NUP			120 (4.7244)	215 (8.4646)	40 (1.5748)	2.1 (0.0827)	2.1 (0.0827)	143.5 (5.6496)	
226				N	NF	130 (5.1181)	230 (9.0551)	40 (1.5748)	3 (0.1182)	3 (0.1182)		204.0 (8.0315)
226E*	NU	NJ	NUP			130 (5.1181)	230 (9.0551)	40 (1.5748)	3 (0.1182)	3 (0.1182)	153.5 (6.0433)	
228				N	NF	140 (5.5118)	250 (9.8425)	42 (1.6535)	3 (0.1182)	3 (0.1182)		221.0 (8.7008)
228E*	NU	NJ	NUP			140 (5.5118)	250 (9.8425)	42 (1.6535)	3 (0.1182)	3 (0.1182)	169.0 (6.6535)	
230				N	NF	150 (5.9055)	270 (10.6299)	45 (1.7717)	3 (0.1182)	3 (0.1182)		238.0 (9.3701)
230E*	NU	NJ	NUP			150 (5.9055)	270 (10.6299)	45 (1.7717)	3 (0.1182)	3 (0.1182)	182.0 (7.1654)	
232				N	NF	160 (6.2992)	290 (11.4173)	48 (1.8898)	3 (0.1182)	3 (0.1182)		255.0 (10.0394)
232E*	NU	NJ	NUP			160 (6.2992)	290 (11.4173)	48 (1.8898)	3 (0.1182)	3 (0.1182)	195.0 (7.6772)	
234				N	NF	170 (6.6929)	310 (12.2047)	52 (2.0472)	4 (0.1575)	4 (0.1575)		272.0 (10.7087)
234E*	NU	NJ	NUP			170 (6.6929)	310 (12.2047)	52 (2.0472)	4 (0.1575)	4 (0.1575)	207.0 (8.1496)	
236				N	NF	180 (7.0866)	320 (12.5984)	52 (2.0472)	4 (0.1575)	4 (0.1575)		282.0 (11.1024)
236E*	NU	NJ	NUP			180 (7.0866)	320 (12.5984)	52 (2.0472)	4 (0.1575)	4 (0.1575)	217.0 (8.5433)	
238				N	NF	190 (7.4803)	340 (13.3858)	55 (2.1654)	4 (0.1575)	4 (0.1575)		299.0 (11.7717)
238E*	NU	NJ	NUP			190 (7.4803)	340 (13.3858)	55 (2.1654)	4 (0.1575)	4 (0.1575)	230.0 (9.0551)	
240				N	NF	200 (7.8740)	360 (14.1732)	58 (2.2835)	4 (0.1575)	4 (0.1575)		316.0 (12.4409)
240E*	NU	NJ	NUP			200 (7.8740)	360 (14.1732)	58 (2.2835)	4 (0.1575)	4 (0.1575)	243.0 (9.5669)	
244E*	NU	NJ	NUP	N	NF	220 (8.6614)	400 (15.7480)	65 (2.5591)	4 (0.1575)	4 (0.1575)	270.0 (10.6299)	350.0 (13.7795)
248	NU	NJ	NUP	N	NF	240 (9.4488)	440 (17.3228)	72 (2.8346)	4 (0.1575)	4 (0.1575)	295.0 (11.6142)	385.0 (15.1575)
252	NU	NJ	NUP	N	NF	260 (10.2362)	480 (18.8976)	80 (3.1496)	5 (0.1969)	5 (0.1969)	320.0 (12.5984)	420.0 (16.5354)

*Indicates NSK (HPS) High Performance Standard bearing.

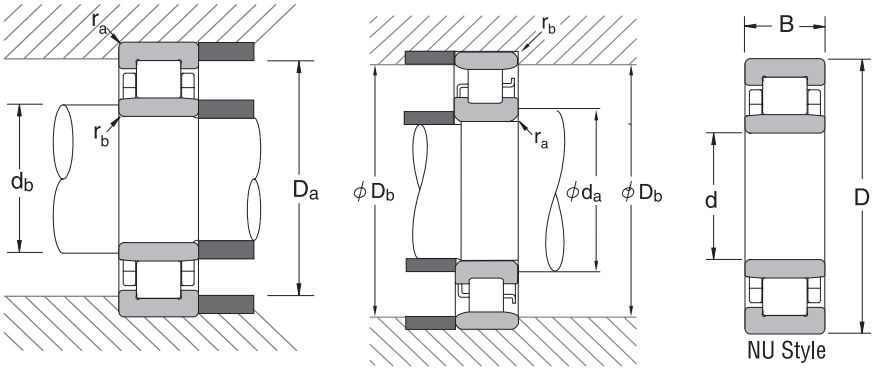

Common Options	
M	Machined Brass Cage
W	Pressed Steel Cage
ET	High Capacity Polyamide Cage
CO*	Normal Internal Clearance
C3	Greater than Normal Internal Clearance

*Not shown in part number

Bearing Number	Basic Load Ratings		Limiting Speeds (RPM)		Abutment and Fillet Dimensions										Bearing Weight (Approx.)
	C_r	C_{0r}			d_a (min)	d_b (min)	d_b (max)	d_c (min)	d_d (min)	D_a (max)	D_b (max)	D_b (min)	r_a** (max)	r_b** (max)	
	N (lbs)	N (lbs)	Grease	Oil	mm (in)	mm (in)	mm (in)	mm (in)	mm (in)	mm (in)	mm (in)	mm (in)	mm (in)	mm (in)	kg (lbs)
224	260000 (58500)	320000 (71500)	3000	3400	131.0 (5.157)						204.0 (8.031)	196 (7.717)	2.0 (0.078)	2.0 (0.078)	5.63 (12.4)
224E*	410000 (92100)	420000 (95000)	3000	3400		131.0 (5.157)	140 (5.512)	146 (5.748)	156 (6.142)	204.0 (8.031)			2.0 (0.078)	2.0 (0.078)	6.43 (14.1)
226	282000 (63500)	360000 (81500)	2600	3200	143.0 (5.630)						217.0 (8.543)	208 (8.189)	2.5 (0.098)	2.5 (0.098)	6.48 (14.3)
226E*	445000 (100000)	455000 (102000)	2600	3200		143.0 (5.630)	150 (5.906)	158 (6.220)	168 (6.614)	217.0 (8.543)			2.5 (0.098)	2.5 (0.098)	8.03 (17.7)
228	297000 (67000)	375000 (84000)	2400	3000	153.0 (6.024)						237.0 (9.331)	225 (8.858)	2.5 (0.098)	2.5 (0.098)	8.08 (17.8)
228E*	485000 (109000)	515000 (116000)	2400	3000		153.0 (6.024)	165 (6.496)	171 (6.732)	182 (7.165)	237.0 (9.331)			2.5 (0.098)	2.5 (0.098)	9.38 (20.6)
230	375000 (84500)	490000 (111000)	2200	2800	163.0 (6.417)						257.0 (10.118)	242 (9.528)	2.5 (0.098)	2.5 (0.098)	10.4 (22.9)
230E*	550000 (123600)	595000 (134000)	2200	2800		163.0 (6.417)	177 (6.969)	184 (7.244)	196 (7.717)	257.0 (10.118)			2.5 (0.098)	2.5 (0.098)	11.9 (26.2)
232	430000 (96000)	570000 (128000)	2200	2600	173.0 (6.811)						277.0 (10.906)	261 (10.276)	2.5 (0.098)	2.5 (0.098)	14.1 (31.0)
232E*	615000 (138000)	665000 (150000)	2200	2600		173.0 (6.811)	190 (7.480)	197 (7.756)	210 (8.268)	277.0 (10.906)			2.5 (0.098)	2.5 (0.098)	14.7 (32.3)
234	475000 (107000)	635000 (143000)	2000	2400	186.0 (7.323)						294.0 (11.575)	278 (10.945)	3.0 (0.118)	3.0 (0.118)	17.4 (38.3)
234E*	740000 (166000)	800000 (180000)	2000	2400		186.0 (7.323)	202 (7.953)	211 (8.307)	223 (8.780)	294.0 (11.575)			3.0 (0.118)	3.0 (0.118)	18.3 (40.3)
236	495000 (111000)	675000 (152000)	1900	2200	196.0 (7.717)						304.0 (11.969)	288 (11.339)	3.0 (0.118)	3.0 (0.118)	18.1 (39.8)
236E*	770000 (173000)	850000 (192000)	1900	2200		196.0 (7.717)	212 (8.346)	221 (8.701)	233 (9.173)	304.0 (11.969)			3.0 (0.118)	3.0 (0.118)	19.0 (41.8)
238	555000 (125000)	770000 (173000)	1800	2200	206.0 (8.110)						324.0 (12.756)	305 (12.008)	3.0 (0.118)	3.0 (0.118)	22.0 (48.4)
238E*	855000 (192000)	955000 (215000)	1800	2200		206.0 (8.110)	225 (8.858)	234 (9.213)	247 (9.724)	324.0 (12.756)			3.0 (0.118)	3.0 (0.118)	23 (50.6)
240	620000 (140000)	865000 (195000)	1700	2000	216.0 (8.504)						344.0 (13.543)	323 (12.717)	3.0 (0.118)	3.0 (0.118)	26.2 (57.6)
240E*	945000 (212000)	1060000 (239000)	1700	2000		216.0 (8.504)	238 (9.370)	247 (9.724)	261 (10.276)	344.0 (13.543)			3.0 (0.118)	3.0 (0.118)	27.4 (60.3)
244E*	1110000 (249000)	1250000 (281000)	1500	1800	236.0 (9.291)	236.0 (9.291)	264 (10.394)	273 (10.748)	289 (11.378)	384.0 (15.118)	384.0 (15.118)	357 (14.055)	3.0 (0.118)	3.0 (0.118)	37.0 (81.4)
248	935000 (211000)	1340000 (300000)	1300	1600	256.0 (10.079)	256.0 (10.079)	289 (11.378)	298 (11.732)	316 (12.441)	424.0 (16.693)	424.0 (16.693)	392 (15.433)	3.0 (0.118)	3.0 (0.118)	49.6 (109)
252	1100000 (248000)	1580000 (355000)	1200	1500	280.0 (11.024)	280.0 (11.024)	314 (12.362)	323 (12.717)	343 (13.504)	460.0 (18.110)	460.0 (18.110)	428 (16.850)	4.0 (0.157)	4.0 (0.157)	66.2 (146)

C_r = Dynamic Radial Load Rating C_{or} = Static Radial Load Rating **Maximum fillet which corner radius of bearing will clear.

CYLINDRICAL ROLLER BEARING: 300 SERIES

NU, N, NJ, NUP, AND NF

Bearing Number	Available Styles					Boundary Dimensions						
						d	D	B	r_{min}	r_{1min}	F_w	E_w
						mm (in)	mm (in)	mm (in)	mm (in)	mm (in)	mm (in)	mm (in)
304				N	NF	20 (0.7874)	52 (2.0472)	15 (0.5906)	1.1 (0.0434)	0.6 (0.0237)		44.5 (1.7520)
304E	NU	NJ	NUP			20 (0.7874)	52 (2.0472)	15 (0.5906)	1.1 (0.0434)	0.6 (0.0237)	27.5 (1.0827)	
305				N	NF	25 (0.9843)	62 (2.4409)	17 (0.6693)	1.1 (0.0434)	1.1 (0.0434)		53.0 (2.0866)
305E*	NU	NJ	NUP			25 (0.9843)	62 (2.4409)	17 (0.6693)	1.1 (0.0434)	1.1 (0.0434)	34.0 (1.3386)	
306				N	NF	30 (1.1811)	72 (2.8346)	19 (0.7480)	1.1 (0.0434)	1.1 (0.0434)		62.0 (2.4409)
306E*	NU	NJ	NUP			30 (1.1811)	72 (2.8346)	19 (0.7480)	1.1 (0.0434)	1.1 (0.0434)	40.5 (1.5945)	
307				N	NF	35 (1.3780)	80 (3.1496)	21 (0.8268)	1.5 (0.0591)	1.1 (0.0434)		68.2 (2.6850)
307E*	NU	NJ	NUP			35 (1.3780)	80 (3.1496)	21 (0.8268)	1.5 (0.0591)	1.1 (0.0434)	46.2 (1.8189)	
308				N	NF	40 (1.5748)	90 (3.5433)	23 (0.9055)	1.5 (0.0591)	1.5 (0.0591)		77.5 (3.0512)
308E*	NU	NJ	NUP			40 (1.5748)	90 (3.5433)	23 (0.9055)	1.5 (0.0591)	1.5 (0.0591)	52 (2.0472)	
309				N	NF	45 (1.7717)	100 (3.9370)	25 (0.9843)	1.5 (0.0591)	1.5 (0.0591)		86.5 (3.4055)
309E*	NU	NJ	NUP			45 (1.7717)	100 (3.9370)	25 (0.9843)	1.5 (0.0591)	1.5 (0.0591)	58.5 (2.3031)	
310				N	NF	50 (1.9685)	110 (4.3307)	27 (1.0630)	2.0 (0.0788)	2.0 (0.0788)		95.0 (3.7402)
310E*	NU	NJ	NUP			50 (1.9685)	110 (4.3307)	27 (1.0630)	2.0 (0.0788)	2.0 (0.0788)	65.0 (2.5591)	
311				N	NF	55 (2.1654)	120 (4.7244)	29 (1.1417)	2.0 (0.0788)	2.0 (0.0788)		104.5 (4.1142)
311E*	NU	NJ	NUP			55 (2.1654)	120 (4.7244)	29 (1.1417)	2.0 (0.0788)	2.0 (0.0788)	70.5 (2.7756)	
312				N	NF	60 (2.3622)	130 (5.1181)	31 (1.2205)	2.1 (0.0827)	2.1 (0.0827)		113.0 (4.4488)
312E*	NU	NJ	NUP			60 (2.3622)	130 (5.1181)	31 (1.2205)	2.1 (0.0827)	2.1 (0.0827)	77.0 (3.0315)	
313				N	NF	65 (2.5591)	140 (5.5118)	33 (1.2992)	2.1 (0.0827)	2.1 (0.0827)		121.5 (4.7835)

*Indicates NSK (HPS) High Performance Standard bearing.

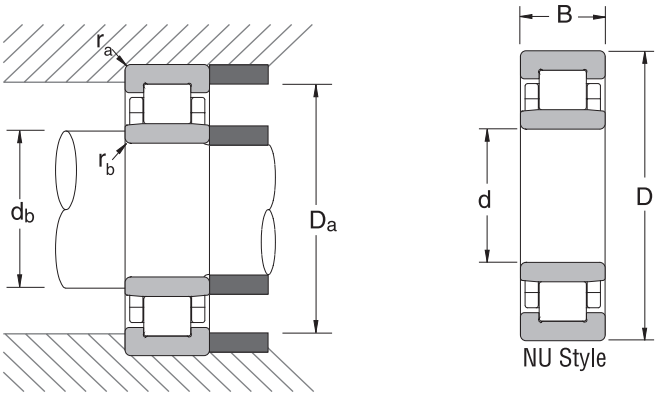

Common Options	
M	Machined Brass Cage
W	Pressed Steel Cage
ET	High Capacity Polyamide Cage
CO*	Normal Internal Clearance
C3	Greater than Normal Internal Clearance

*Not shown in part number

Bearing Number	Basic Load Ratings		Limiting Speeds (RPM)		Abutment and Fillet Dimensions										Bearing Weight (Approx.)
	C_r	C_{0r}			d_a (min)	d_b (min)	d_b (max)	d_c (min)	d_d (min)	D_a (max)	D_b (max)	D_b (min)	r_{a**} (max)	r_{b**} (max)	
	N (lbs)	N (lbs)	Grease	Oil	mm (in)	mm (in)	mm (in)	mm (in)	mm (in)	mm (in)	mm (in)	mm (in)	mm (in)	mm (in)	kg (lbs)
304	21400 (4800)	17300 (3900)	12000	15000	26.5 (1.043)						48.0 (1.890)	46.0 (1.811)	1.0 (0.039)	0.6 (0.023)	0.148 (0.33)
304E	31500 (7100)	26900 (6050)	12000	15000		24.0 (0.945)	26 (1.024)	30 (1.181)	33 (1.299)	45.5 (1.791)			1.0 (0.039)	0.6 (0.023)	0.145 (0.32)
305	29300 (6600)	25200 (5650)	10000	13000	31.5 (1.240)						55.5 (2.185)	50.0 (1.969)	1.0 (0.039)	1.0 (0.039)	0.233 (0.51)
305E*	48000 (10700)	37500 (8400)	10000	12000		31.5 (1.240)	32 (1.260)	37 (1.457)	40 (1.575)	55.5 (2.185)			1.0 (0.039)	1.0 (0.039)	0.269 (0.59)
306	38500 (8700)	35000 (7900)	8500	11000	36.5 (1.437)						65.5 (2.579)	64.0 (2.520)	1.0 (0.039)	1.0 (0.039)	0.353 (0.78)
306E*	61000 (13800)	50000 (11300)	8500	10000		36.5 (1.437)	39 (1.535)	44 (1.732)	48 (1.890)	65.5 (2.579)			1.0 (0.039)	1.0 (0.039)	0.409 (0.90)
307	49500 (11200)	47000 (10500)	8000	9500	43.0 (1.693)						73.5 (2.894)	70.0 (2.756)	1.5 (0.059)	1.0 (0.039)	0.476 (1.05)
307E*	76500 (17200)	65500 (14700)	7500	9500		41.5 (1.634)	44 (1.732)	48 (1.890)	53 (2.087)	72.0 (2.835)			1.5 (0.059)	1.0 (0.039)	0.545 (1.20)
308	58500 (13200)	57000 (12800)	6700	8500	48.0 (1.890)						82.0 (3.228)	79.0 (3.110)	1.5 (0.059)	1.5 (0.059)	0.649 (1.43)
308E*	95500 (21500)	81500 (18300)	6700	8000		48.0 (1.890)	50 (1.969)	55 (2.165)	60 (2.362)	82.0 (3.228)			1.5 (0.059)	1.5 (0.059)	0.747 (1.64)
309	79000 (17700)	77500 (17400)	6300	7500	53.0 (2.087)						92.0 (3.622)	77.0 (3.031)	1.5 (0.059)	1.5 (0.059)	0.869 (1.91)
309E*	112000 (25200)	98500 (22100)	6000	7500		53.0 (2.087)	56 (2.205)	60 (2.362)	66 (2.598)	92.0 (3.622)			1.5 (0.059)	1.5 (0.059)	1.01 (2.22)
310	87000 (19500)	86000 (19400)	5600	6700	59.0 (2.323)						101.0 (3.976)	97.0 (3.819)	2.0 (0.078)	2.0 (0.078)	1.11 (2.44)
310E*	127000 (28500)	113000 (25400)	5000	6000		59.0 (2.323)	63 (2.480)	67 (2.638)	73 (2.874)	101.0 (3.976)			2.0 (0.078)	2.0 (0.078)	1.3 (2.86)
311	111000 (24900)	111000 (25000)	5000	6300	64.0 (2.520)						111.0 (4.370)	107.0 (4.213)	2.0 (0.078)	2.0 (0.078)	1.42 (3.12)
311E*	158000 (35500)	143000 (32000)	4500	5600		64.0 (2.520)	68 (2.677)	72 (2.835)	80 (3.150)	111.0 (4.370)			2.0 (0.078)	2.0 (0.078)	1.64 (3.61)
312	124000 (27800)	126000 (28400)	4800	5600	71.0 (2.795)						119.0 (4.685)	115.0 (4.528)	2.0 (0.078)	2.0 (0.078)	1.78 (3.92)
312E*	169000 (38000)	157000 (35500)	4800	5600		71.0 (2.795)	75 (2.953)	79 (3.110)	86 (3.386)	119.0 (4.685)			2.0 (0.078)	2.0 (0.078)	2.06 (4.53)
313	135000 (30500)	139000 (31000)	4300	5300	76.0 (2.992)						129.0 (5.079)	125.0 (4.921)	2.0 (0.078)	2.0 (0.078)	2.17 (4.77)

C_r = Dynamic Radial Load Rating C_{or} = Static Radial Load Rating **Maximum fillet which corner radius of bearing will clear.

CYLINDRICAL ROLLER BEARING: 300 SERIES (CONT.)

NU, N, NJ, NUP, AND NF

Bearing Number	Available Styles					Boundary Dimensions						
						d	D	B	r_{min}	r_{1min}	F_w	E_w
						mm (in)	mm (in)	mm (in)	mm (in)	mm (in)	mm (in)	mm (in)
313E*	NU	NJ	NUP			65 (2.5591)	140 (5.5118)	33 (1.2992)	2.1 (0.0827)	2.1 (0.0827)	82.5 (3.2480)	
314				N	NF	70 (2.7559)	150 (5.9055)	35 (1.3780)	2.1 (0.0827)	2.1 (0.0827)		130.0 (5.1181)
314E*	NU	NJ	NUP			70 (2.7559)	150 (5.9055)	35 (1.3780)	2.1 (0.0827)	2.1 (0.0827)	89.0 (3.5039)	
315				N	NF	75 (2.9528)	160 (6.2992)	37 (1.4567)	2.1 (0.0827)	2.1 (0.0827)		139.5 (5.4921)
315E*	NU	NJ	NUP			75 (2.9528)	160 (6.2992)	37 (1.4567)	2.1 (0.0827)	2.1 (0.0827)	95.0 (3.7402)	
316				N	NF	80 (3.1496)	170 (6.6929)	39 (1.5354)	2.1 (0.0827)	2.1 (0.0827)		147.0 (5.7874)
316E*	NU	NJ	NUP			80 (3.1496)	170 (6.6929)	39 (1.5354)	2.1 (0.0827)	2.1 (0.0827)	101.0 (3.9764)	
317				N	NF	85 (3.3465)	180 (7.0866)	41 (1.6142)	3.0 (0.1182)	3.0 (0.1182)		156.0 (6.1417)
317E*	NU	NJ	NUP			85 (3.3465)	180 (7.0866)	41 (1.6142)	3.0 (0.1182)	3.0 (0.1182)	108.0 (4.2520)	
318				N	NF	90 (3.5433)	190 (7.4803)	43 (1.6929)	3.0 (0.1182)	3.0 (0.1182)		165.0 (6.4961)
318E*	NU	NJ	NUP			90 (3.5433)	190 (7.4803)	43 (1.6929)	3.0 (0.1182)	3.0 (0.1182)	113.5 (4.4685)	
319				N	NF	95 (3.7402)	200 (7.8740)	45 (1.7717)	3.0 (0.1182)	3.0 (0.1182)		173.5 (6.8307)
319E*	NU	NJ	NUP			95 (3.7402)	200 (7.8740)	45 (1.7717)	3.0 (0.1182)	3.0 (0.1182)	121.5 (4.7835)	
320				N	NF	100 (3.9370)	215 (8.4646)	47 (1.8504)	3.0 (0.1182)	3.0 (0.1182)		185.5 (7.3031)
320E*	NU	NJ	NUP			100 (3.9370)	215 (8.4646)	47 (1.8504)	3.0 (0.1182)	3.0 (0.1182)	127.5 (5.0197)	
321				N	NF	105 (4.1339)	225 (8.8583)	49 (1.9291)	3.0 (0.1182)	3.0 (0.1182)		195.0 (7.6772)
321E*	NU	NJ	NUP			105 (4.1339)	225 (8.8583)	49 (1.9291)	3.0 (0.1182)	3.0 (0.1182)	133.0 (5.2362)	
322				N	NF	110 (4.3307)	240 (9.4488)	50 (1.9685)	3.0 (0.1182)	3.0 (0.1182)		207.0 (8.1496)
322E*	NU	NJ	NUP			110 (4.3307)	240 (9.4488)	50 (1.9685)	3.0 (0.1182)	3.0 (0.1182)	143.0 (5.6299)	

*Indicates NSK (HPS) High Performance Standard bearing.

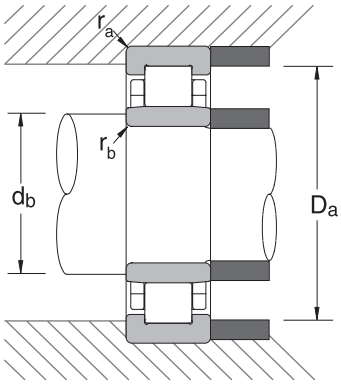

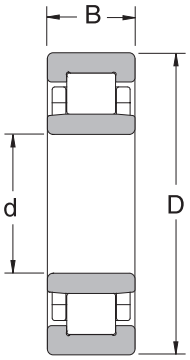

NU Style

Common Options	
M	Machined Brass Cage
W	Pressed Steel Cage
ET	High Capacity Polyamide Cage
CO*	Normal Internal Clearance
C3	Greater than Normal Internal Clearance

*Not shown in part number

Bearing Number	Basic Load Ratings		Limiting Speeds (RPM)		Abutment and Fillet Dimensions										Bearing Weight (Approx.)
	C_r	C_{0r}			d_a (min)	d_b (min)	d_b (max)	d_c (min)	d_d (min)	D_a (max)	D_b (max)	D_b (min)	r_a** (max)	r_b** (max)	
	N (lbs)	N (lbs)	Grease	Oil	mm (in)	mm (in)	mm (in)	mm (in)	mm (in)	mm (in)	mm (in)	mm (in)	mm (in)	mm (in)	kg (lbs)
313E*	204000 (46000)	191000 (43000)	4300	5300		76.0 (2.992)	80 (3.150)	85 (3.346)	93 (3.661)	129.0 (5.079)			2.0 (0.078)	2.0 (0.078)	2.56 (5.63)
314	158000 (35500)	168000 (38000)	4000	5000	81.0 (3.189)						139.0 (5.472)	133.5 (5.256)	2.0 (0.078)	2.0 (0.078)	2.67 (5.87)
314E*	231000 (52000)	222000 (50000)	4000	5000		81.0 (3.189)	86 (3.386)	92 (3.622)	100 (3.937)	139.0 (5.472)			2.0 (0.078)	2.0 (0.078)	3.09 (6.80)
315	179000 (40500)	189000 (42500)	3800	4800	86.0 (3.386)						149.0 (5.866)	143.0 (5.630)	2.0 (0.078)	2.0 (0.078)	3.20 (7.04)
315E*	271000 (61000)	263000 (59000)	3800	4800		86.0 (3.386)	92 (3.622)	97 (3.819)	106 (4.173)	149.0 (5.866)			2.0 (0.078)	2.0 (0.078)	3.73 (8.21)
316	190000 (42500)	207000 (46500)	3600	4300	91.0 (3.583)						159.0 (6.260)	150.0 (5.906)	2.0 (0.078)	2.0 (0.078)	3.85 (8.47)
316E*	289000 (65000)	282000 (63500)	3600	4300		91.0 (3.583)	98 (3.858)	105 (4.134)	114 (4.488)	159.0 (6.260)			2.0 (0.078)	2.0 (0.078)	4.45 (9.79)
317	225000 (50500)	247000 (55500)	3400	4000	98.0 (3.858)						167.0 (6.575)	159.0 (6.260)	2.5 (0.098)	2.5 (0.098)	4.53 (9.97)
317E*	360000 (80900)	330000 (74500)	3400	4000		98.0 (3.858)	105 (4.134)	110 (4.331)	119 (4.685)	167.0 (6.575)			2.5 (0.098)	2.5 (0.098)	5.26 (11.6)
318	240000 (54000)	265000 (59500)	3200	3800	103.0 (4.055)						177.0 (6.969)	168.0 (6.614)	2.5 (0.098)	2.5 (0.098)	5.31 (11.7)
318E*	390000 (87600)	355000 (79500)	3200	3800		103.0 (4.055)	111 (4.370)	117 (4.606)	127 (5.000)	177.0 (6.969)			2.5 (0.098)	2.5 (0.098)	6.10 (13.4)
319	259000 (58000)	289000 (65000)	3000	3600	108.0 (4.252)						187.0 (7.362)	177.0 (6.969)	2.5 (0.098)	2.5 (0.098)	6.09 (13.4)
319E*	410000 (92100)	385000 (87000)	3000	3600		108.0 (4.252)	118 (4.646)	124 (4.882)	134 (5.276)	187.0 (7.362)			2.5 (0.098)	2.5 (0.098)	7.13 (15.7)
320	299000 (67000)	335000 (76000)	2800	3400	113.0 (4.449)						202.0 (7.953)	190.0 (7.480)	2.5 (0.098)	2.5 (0.098)	7.59 (16.7)
320E*	465000 (104500)	425000 (95500)	2800	3400		113.0 (4.449)	124 (4.882)	132 (5.197)	143 (5.630)	202 (7.953)			2.5 (0.098)	2.5 (0.098)	8.63 (19.0)
321	340000 (76500)	390000 (87000)	2600	3200	118.0 (4.646)						212.0 (8.346)	199.0 (7.835)	2.5 (0.098)	2.5 (0.098)	8.69 (19.1)
321E*	525000 (107900)	480000 (108000)	2600	3200		118.0 (4.646)	131 (5.157)	137 (5.394)	149 (5.866)	212.0 (8.346)			2.5 (0.098)	2.5 (0.098)	9.84 (21.6)
322	380000 (85500)	435000 (97500)	2600	3000	123.0 (4.843)						227.0 (8.937)	211.0 (8.307)	2.5 (0.098)	2.5 (0.098)	10.3 (22.7)
322E*	555000 (124700)	525000 (118000)	2600	3000		123.0 (4.843)	139 (5.472)	145 (5.709)	158 (6.220)	227.0 (8.937)			2.5 (0.098)	2.5 (0.098)	11.8 (26.0)

C_r = Dynamic Radial Load Rating C_{0r} = Static Radial Load Rating **Maximum fillet which corner radius of bearing will clear.

CYLINDRICAL ROLLER BEARING: 300 SERIES (CONT.)

NU, N, NJ, NUP, AND NF

Bearing Number	Available Styles					Boundary Dimensions						
						d	D	B	r_{min}	r_{1min}	F_w	E_w
						mm (in)	mm (in)	mm (in)	mm (in)	mm (in)	mm (in)	mm (in)
324				N	NF	120 (4.7244)	260 (10.2362)	55 (2.1654)	3.0 (0.1182)	3.0 (0.1182)		226.0 (8.8976)
324E*	NU	NJ	NUP			120 (4.7244)	260 (10.2362)	55 (2.1654)	3.0 0.1	3.0 0.1	154.0 (6.0630)	
326				N	NF	130 (5.1181)	280 (11.0236)	58 (2.2835)	4.0 (0.1575)	4.0 (0.1575)		243.0 (9.5669)
326E*	NU	NJ	NUP			130 (5.1181)	280 (11.0236)	58 (2.2835)	4.0 (0.1575)	4.0 (0.1575)	167.0 (6.5748)	
328				N	NF	140 (5.5118)	300 (11.8110)	62 (2.4409)	4.0 (0.1575)	4.0 (0.1575)		260.0 (10.2362)
328E*	NU	NJ	NUP			140 (5.5118)	300 (11.8110)	62 (2.4409)	4.0 (0.1575)	4.0 (0.1575)	180.0 (7.0866)	
330				N	NF	150 (5.9055)	320 (12.5984)	65 (2.5591)	4.0 (0.1575)	4.0 (0.1575)		277.0 (10.9055)
330E*	NU	NJ	NUP			150 (5.9055)	320 (12.5984)	65 (2.5591)	4.0 (0.1575)	4.0 (0.1575)	193.0 (7.5984)	
332				N	NF	160 (6.2992)	340 (13.3858)	68 (2.6772)	4.0 (0.1575)	4.0 (0.1575)		292.0 (11.4961)
332E*	NU	NJ	NUP			160 (6.2992)	340 (13.3858)	68 (2.6772)	4.0 (0.1575)	4.0 (0.1575)	204.0 (8.0315)	
334				N	NF	170 (6.6929)	360 (14.1732)	72 (2.8346)	4.0 (0.1575)	4.0 (0.1575)		310.0 (12.2047)
334E	NU	NJ	NUP			170 (6.6929)	360 (14.1732)	72 (2.8346)	4.0 (0.1575)	4.0 (0.1575)	218.0 (8.5827)	
336				N	NF	180 (7.0866)	380 (14.9606)	75 (2.9528)	4.0 (0.1575)	4.0 (0.1575)		328.0 (12.9134)
336E	NU	NJ	NUP			180 (7.0866)	380 (14.9606)	75 (2.9528)	4.0 (0.1575)	4.0 (0.1575)	231.0 (9.0945)	
338				N	NF	190 (7.4803)	400 (15.7480)	78 (3.0709)	5.0 (0.1969)	5.0 (0.1969)		345.0 (13.5827)
338E	NU	NJ	NUP			190 (7.4803)	400 (15.7480)	78 (3.0709)	5.0 (0.1969)	5.0 (0.1969)	245.0 (9.6457)	
340				N	NF	200 (7.8740)	420 (16.5354)	80 (3.1496)	5.0 (0.1969)	5.0 (0.1969)		360.0 (14.1732)
340E	NU	NJ	NUP			200 (7.8740)	420 (16.5354)	80 (3.1496)	5.0 (0.1969)	5.0 (0.1969)	258.0 (10.1575)	
344	NU	NJ	NUP	N	NF	220 (8.6614)	460 (18.1102)	88 (3.4646)	5.0 (0.1969)	5.0 (0.1969)	284.0 (11.1811)	396.0 (15.5906)
348	NU	NJ		N	NF	240 (9.4488)	500 (19.6850)	95 (3.7402)	5.0 (0.1969)	5.0 (0.1969)	310.0 (12.2047)	430.0 (16.9291)
352	NU	NJ				260 (10.2362)	540 (21.2598)	102 (4.0157)	6.0 (0.2363)	6.0 (0.2363)	336.0 (13.2283)	

*Indicates NSK (HPS) High Performance Standard bearing.

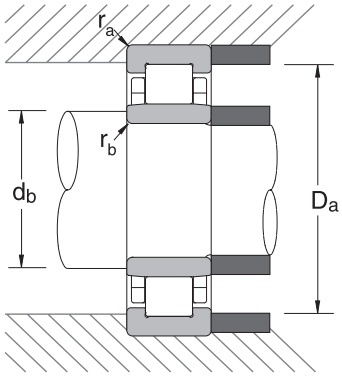

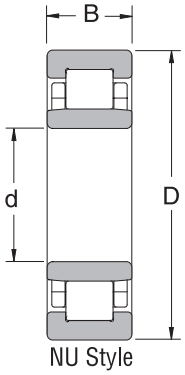

Common Options	
M	Machined Brass Cage
W	Pressed Steel Cage
ET	High Capacity Polyamide Cage
CO*	Normal Internal Clearance
C3	Greater than Normal Internal Clearance

*Not shown in part number

Bearing Number	Basic Load Ratings		Limiting Speeds (RPM)		Abutment and Fillet Dimensions										Bearing Weight (Approx.)
	C_r	C_{0r}			d_a (min)	d_b (min)	d_b (max)	d_c (min)	d_d (min)	D_a (max)	D_b (max)	D_b (min)	r_a** (max)	r_b** (max)	
	N (lbs)	N (lbs)	Grease	Oil	mm (in)	mm (in)	mm (in)	mm (in)	mm (in)	mm (in)	mm (in)	mm (in)	mm (in)	mm (in)	kg (lbs)
324	450000 (101000)	510000 (114000)	2200	2800	133.0 (5.236)						247.0 (9.724)	230.0 (9.055)	2.5 (0.098)	2.5 (0.098)	12.9 (28.4)
324E*	650000 (146000)	610000 (137000)	2200	2800		133.0 (5.236)	150 (5.906)	156 (6.142)	171 (6.732)	247.0 (9.724)			2.5 (0.098)	2.5 (0.098)	15.0 (33.0)
326	560000 (126000)	665000 (150000)	2200	2600	146.0 (5.748)						264.0 (10.394)	247.5 (9.744)	3.0 (0.118)	3.0 (0.118)	17.7 (38.9)
326E*	760000 (170000)	735000 (165000)	2200	2600		146.0 (5.748)	163 (6.417)	169 (6.654)	184 (7.244)	264.0 (10.394)			3.0 (0.118)	3.0 (0.118)	18.7 (41.1)
328	615000 (139000)	745000 (168000)	2000	2400	156.0 (6.142)						284.0 (11.181)	266.0 (10.472)	3.0 (0.118)	3.0 (0.118)	21.7 (47.7)
328E*	815000 (183000)	795000 (179000)	2000	2400		156.0 (6.142)	176 (6.929)	182 (7.165)	198 (7.795)	284.0 (11.181)			3.0 (0.118)	3.0 (0.118)	22.8 (50.2)
330	665000 (149000)	805000 (182000)	1800	2200	166.0 (6.535)						304.0 (11.969)	283.0 (11.142)	3.0 (0.118)	3.0 (0.118)	25.8 (56.8)
330E*	930000 (209000)	920000 (207000)	1800	2200		166.0 (6.535)	188 (7.402)	195 (7.677)	213 (8.386)	304.0 (11.969)			3.0 (0.118)	3.0 (0.118)	27.1 (59.6)
332	700000 (157000)	875000 (197000)	1700	2000	176.0 (6.929)						324.0 (12.756)	298.0 (11.732)	3.0 (0.118)	3.0 (0.118)	30.8 (67.8)
332E*	1060000 (238000)	1050000 (237000)	1700	2000		176.0 (6.929)	199 (7.835)	211 (8.307)	228 (8.976)	324.0 (12.756)			3.0 (0.118)	3.0 (0.118)	32.1 (70.6)
334	795000 (179000)	1010000 (227000)	1600	2000	186.0 (7.323)						344.0 (13.543)	316.0 (12.441)	3.0 (0.118)	3.0 (0.118)	36.6 (80.5)
334E	930000 (209000)	1150000 (259000)	1600	2000		186.0 (7.323)	213 (8.386)	223 (8.780)	241 (9.488)	344.0 (13.543)			3.0 (0.118)	3.0 (0.118)	37.9 (83.4)
336	905000 (203000)	1150000 (260000)	1500	1800	196.0 (7.717)						364.0 (14.331)	335.0 (13.189)	3.0 (0.118)	3.0 (0.118)	42.6 (93.7)
336E	985000 (221000)	1230000 (276000)	1500	1800		196.0 (7.717)	226 (8.898)	235 (9.252)	255 (10.039)	364.0 (14.331)			3.0 (0.118)	3.0 (0.118)	44.0 (96.8)
338	975000 (219000)	1260000 (283000)	1400	1700	210.0 (8.268)						380.0 (14.961)	352.0 (13.858)	4.0 (0.157)	4.0 (0.157)	48.7 (107)
338E	1060000 (238000)	1340000 (300000)	1400	1700		210.0 (8.268)	240 (9.449)	248 (9.764)	268 (10.551)	380.0 (14.961)			4.0 (0.157)	4.0 (0.157)	50.6 (111)
340	975000 (219000)	1270000 (286000)	1300	1600	220.0 (8.661)						400.0 (15.748)	367.0 (14.449)	4.0 (0.157)	4.0 (0.157)	55.3 (122)
340E	1140000 (255000)	1450000 (325000)	1300	1600		220.0 (8.661)	252 (9.921)	263 (10.354)	283 (11.142)	400.0 (15.748)			4.0 (0.157)	4.0 (0.157)	57.1 (126)
344	1190000 (268000)	1570000 (355000)	1200	1500	240.0 (9.449)	240.0 (9.449)	278 (10.945)	287 (11.299)	307 (12.087)	440.0 (17.323)	440.0 (17.323)	403.0 (15.866)	4.0 (0.157)	4.0 (0.157)	72.8 (160)
348	1360000 (305000)	1820000 (410000)	1100	1300	260.0 (10.236)	260.0 (10.236)	304 (11.969)	313 (12.323)	333 (13.110)	480.0 (18.898)	480.0 (18.898)	438.0 (17.244)	4.0 (0.157)	4.0 (0.157)	92.3 (203)
352	1540000 (345000)	2090000 (470000)	1000	1200		286.0 (11.260)	330 (12.992)	339 (13.346)	359 (14.134)	514.0 (20.236)			5.0 (0.196)	5.0 (0.196)	118.0 (260)

C_r = Dynamic Radial Load Rating C_{or} = Static Radial Load Rating **Maximum fillet which corner radius of bearing will clear.

CYLINDRICAL ROLLER BEARING: 400 SERIES

NU, N, NJ, NUP, AND NF

Bearing Number	Available Styles					Boundary Dimensions						
						d	D	B	r_{min}	r_{1min}	F_w	E_w
						mm (in)	mm (in)	mm (in)	mm (in)	mm (in)	mm (in)	mm (in)
405	NU	NJ	NUP	N	NF	25 (0.9843)	80 (3.1496)	21 (0.8268)	1.5 (0.0591)	1.5 (0.0591)	38.8 (1.5276)	62.8 (2.4724)
406	NU	NJ	NUP	N	NF	30 (1.1811)	90 (3.5433)	23 (0.9055)	1.5 (0.0591)	1.5 (0.0591)	45.0 (1.7717)	73.0 (2.8740)
407	NU	NJ		N	NF	35 (1.3780)	100 (3.9370)	25 (0.9843)	1.5 (0.0591)	1.5 (0.0591)	53.0 (2.0866)	83.0 (3.2677)
408	NU	NJ	NUP	N	NF	40 (1.5748)	110 (4.3307)	27 (1.0630)	2.0 (0.0788)	2.0 (0.0788)	58.0 (2.2835)	92.0 (3.6220)
409	NU	NJ	NUP	N	NF	45 (1.7717)	120 (4.7244)	29 (1.1417)	2.0 (0.0788)	2.0 (0.0788)	64.5 (2.5394)	100.5 (3.9567)
410	NU	NJ	NUP	N	NF	50 (1.9685)	130 (5.1181)	31 (1.2205)	2.1 (0.0827)	2.1 (0.0827)	70.8 (2.7874)	110.8 (4.3622)
411	NU	NJ	NUP	N	NF	55 (2.1654)	140 (5.5118)	33 (1.2992)	2.1 (0.0827)	2.1 (0.0827)	77.2 (3.0394)	117.2 (4.6142)
412	NU	NJ	NUP	N	NF	60 (2.3622)	150 (5.9055)	35 (1.3780)	2.1 (0.0827)	2.1 (0.0827)	83.0 (3.2677)	127.0 (5.0000)
413	NU	NJ		N	NF	65 (2.5591)	160 (6.2992)	37 (1.4567)	2.1 (0.0827)	2.1 (0.0827)	89.3 (3.5157)	135.3 (5.3268)
414	NU	NJ	NUP	N	NF	70 (2.7559)	180 (7.0866)	42 (1.6535)	3.0 (0.1182)	3.0 (0.1182)	100.0 (3.9370)	152.0 (5.9843)
415	NU	NJ		N	NF	75 (2.9528)	190 (7.4803)	45 (1.7717)	3.0 (0.1182)	3.0 (0.1182)	104.5 (4.1142)	160.5 (6.3189)
416	NU	NJ		N	NF	80 (3.1496)	200 (7.8740)	48 (1.8898)	3.0 (0.1182)	3.0 (0.1182)	110.0 (4.3307)	170.0 (6.6929)
417	NU	NJ		N	NF	85 (3.3465)	210 (8.2677)	52 (2.0472)	4.0 (0.1575)	4.0 (0.1575)	113.0 (4.4488)	177.0 (6.9685)
418	NU	NJ		N	NF	90 (3.5433)	225 (8.8583)	54 (2.1260)	4.0 (0.1575)	4.0 (0.1575)	123.5 (4.8622)	191.5 (7.5394)
419	NU	NJ	NUP		NF	95 (3.7402)	240 (9.4488)	55 (2.1654)	4.0 (0.1575)	4.0 (0.1575)	133.5 (5.2559)	201.5 (7.9331)
420	NU	NJ		N	NF	100 (3.9370)	250 (9.8425)	58 (2.2835)	4.0 (0.1575)	4.0 (0.1575)	139.0 (5.4724)	211.0 (8.3071)
421	NU	NJ		N	NF	105 (4.1339)	260 (10.2362)	60 (2.3622)	4.0 (0.1575)	4.0 (0.1575)	144.5 (5.6890)	220.5 (8.6811)
422	NU	NJ				110 (4.3307)	280 (11.0236)	65 (2.5591)	4.0 (0.1575)	4.0 (0.1575)	155.0 (6.1024)	
424	NU	NJ	NUP	N	NF	120 (4.7244)	310 (12.2047)	72 (2.8346)	5.0 (0.1969)	5.0 (0.1969)	170.0 (6.6929)	260.0 (10.2362)
426	NU	NJ			NF	130 (5.1181)	340 (13.3858)	78 (3.0709)	5.0 (0.1969)	5.0 (0.1969)	185.0 (7.2835)	285.0 (11.2205)
428	NU	NJ		N		140 (5.5118)	360 (14.1732)	82 (3.2283)	5.0 (0.1969)	5.0 (0.1969)	198.0 (7.7953)	302.0 (11.8898)
430	NU	NJ				150 (5.9055)	380 (14.9606)	85 (3.3465)	5.0 (0.1969)	5.0 (0.1969)	213.0 (8.3858)	

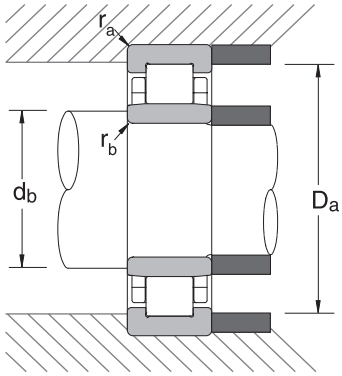

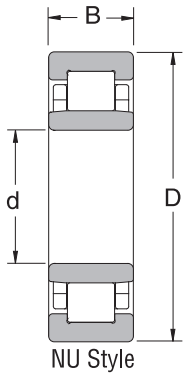

Common Options	
M	Machined Brass Cage
W	Pressed Steel Cage
ET	High Capacity Polyamide Cage
CO*	Normal Internal Clearance
C3	Greater than Normal Internal Clearance

*Not shown in part number

Bearing Number	Basic Load Ratings		Limiting Speeds (RPM)		Abutment and Fillet Dimensions										Bearing Weight (Approx.)
	C_r	C_{0r}			d_a (min)	d_b (min)	d_b (max)	d_c (min)	d_d (min)	D_a (max)	D_b (max)	D_b (min)	r_a* (max)	r_b* (max)	
	N (lbs)	N (lbs)	Grease	Oil	mm (in)	mm (in)	mm (in)	mm (in)	mm (in)	mm (in)	mm (in)	mm (in)	mm (in)	mm (in)	kg (lbs)
405	46500 (10500)	40000 (9000)	9000	11000	33 (1.299)	33 (1.299)	37 (1.457)	41 (1.614)	46 (1.811)	46 (1.811)	72 (2.835)	72 (2.835)	64 (2.519)	1.5 (0.059)	0.57 (1.25)
406	62500 (14100)	55000 (12400)	7500	9500	38 (1.496)	38 (1.496)	43 (1.693)	47 (1.850)	52 (2.047)	52 (2.047)	82 (3.228)	82 (3.228)	75 (2.952)	1.5 (0.059)	0.758 (1.67)
407	75500 (16900)	69000 (15500)	6700	8000	43 (1.693)	43 (1.693)	51 (2.008)	55 (2.165)	61 (2.402)	61 (2.402)	92 (3.622)	92 (3.622)	85 (3.346)	1.5 (0.059)	1.01 (2.22)
408	95500 (21500)	89000 (20000)	6000	7500	49 (1.929)	49 (1.929)	56 (2.205)	60 (2.362)	67 (2.638)	67 (2.638)	101 (3.976)	101 (3.976)	94 (3.700)	2.0 (0.078)	1.28 (2.82)
409	107000 (24100)	102000 (22800)	5600	6700	54 (2.126)	54 (2.126)	62 (2.441)	66 (2.598)	74 (2.913)	74 (2.913)	111 (4.370)	111 (4.370)	103 (4.055)	2.0 (0.078)	1.62 (3.56)
410	129000 (29000)	124000 (27800)	5000	6000	61 (2.402)	61 (2.402)	68 (2.677)	73 (2.874)	81 (3.189)	81 (3.189)	119 (4.685)	119 (4.685)	113.3 (4.460)	2.0 (0.078)	1.99 (4.38)
411	139000 (31500)	138000 (31000)	4500	5600	66 (2.598)	66 (2.598)	75 (2.953)	79 (3.110)	87 (3.425)	87 (3.425)	129 (5.079)	129 (5.079)	119 (4.685)	2.0 (0.078)	2.5 (5.50)
412	167000 (37500)	168000 (38000)	4300	5300	71 (2.795)	71 (2.795)	80 (3.150)	85 (3.346)	94 (3.701)	94 (3.701)	139 (5.472)	139 (5.472)	130 (5.118)	2.0 (0.078)	3.04 (6.69)
413	182000 (41000)	186000 (42000)	4000	4800	76 (2.992)	76 (2.992)	86 (3.386)	91 (3.583)	100 (3.937)	100 (3.937)	149 (5.866)	149 (5.866)	138.8 (5.464)	2.0 (0.078)	3.63 (7.99)
414	228000 (51000)	236000 (53000)	3600	4300	83 (3.268)	83 (3.268)	97 (3.819)	102 (4.016)	112 (4.409)	112 (4.409)	167 (6.575)	167 (6.575)	155 (6.102)	2.5 (0.098)	5.28 (11.62)
415	262000 (59000)	274000 (61500)	3400	4000	88 (3.465)	88 (3.465)	102 (4.016)	107 (4.213)	118 (4.646)	118 (4.646)	177 (6.969)	177 (6.969)	164 (6.456)	2.5 (0.098)	6.27 (13.79)
416	299000 (67500)	315000 (71000)	3200	3800	93 (3.661)	93 (3.661)	107 (4.213)	112 (4.409)	124 (4.882)	124 (4.882)	187 (7.362)	187 (7.362)	173 (6.811)	2.5 (0.098)	7.36 (16.19)
417	335000 (75000)	350000 (78500)	3000	3800	101 (3.976)	101 (3.976)	110 (4.331)	115 (4.528)	128 (5.039)	128 (5.039)	194 (7.638)	194 (7.638)	180 (7.086)	3.0 (0.118)	9.56 (21.03)
418	375000 (84000)	400000 (90000)	2800	3400	106 (4.173)	106 (4.173)	120 (4.724)	125 (4.921)	139 (5.472)	139 (5.472)	209 (8.228)	209 (8.228)	196 (7.716)	3.0 (0.118)	11.5 (25.30)
419	400000 (90000)	445000 (99500)	2600	3200	111 (4.370)	111 (4.370)	130 (5.118)	136 (5.354)	149 (5.866)	149 (5.866)	224 (8.819)	224 (8.819)	206 (8.110)	3.0 (0.118)	13.6 (29.92)
420	450000 (101000)	500000 (112000)	2600	3000	116 (4.567)	116 (4.567)	135 (5.315)	141 (5.551)	156 (6.142)	156 (6.142)	234 (9.213)	234 (9.213)	215 (8.464)	3.0 (0.118)	15.5 (34.10)
421	495000 (112000)	555000 (125000)	2400	3000	121 (4.764)	121 (4.764)	141 (5.551)	147 (5.787)	163 (6.417)	163 (6.417)	244 (9.606)	244 (9.606)	225 (8.858)	3.0 (0.118)	17.3 (38.06)
422	550000 (123000)	620000 (140000)	2200	2800	126 (4.961)	126 (4.961)	151 (5.945)	157 (6.181)	173 (6.811)	173 (6.811)	264 (10.394)			3.0 (0.118)	22.1 (48.62)
424	675000 (151000)	770000 (173000)	2000	2400	140 (5.512)	140 (5.512)	166 (6.535)	172 (6.772)	190 (7.480)	190 (7.480)	290 (11.417)	290 (11.417)	266 (10.472)	4.0 (0.157)	30.2 (66.44)
426	825000 (185000)	955000 (215000)	1800	2200	150 (5.906)	150 (5.906)	180 (7.087)	187 (7.362)	208 (8.189)	208 (8.189)	320 (12.598)	320 (12.598)	291 (11.456)	4.0 (0.157)	39.6 (87.12)
428	875000 (197000)	1020000 (230000)	1700	2000	160 (6.299)	160 (6.299)	193 (7.598)	200 (7.874)	222 (8.740)	222 (8.740)	340 (13.386)	340 (13.386)	308 (12.125)	4.0 (0.157)	46.4 (102.08)
430	930000 (209000)	1120000 (253000)	1600	2000	170 (6.693)	170 (6.693)	208 (8.189)	216 (8.504)	237 (9.331)	237 (9.331)	360 (14.173)			4.0 (0.157)	55.8 (122.76)

C_r = Dynamic Radial Load Rating C_{or} = Static Radial Load Rating *Maximum fillet which corner radius of bearing will clear.

CYLINDRICAL ROLLER BEARING: 1000 SERIES

NU, N, NJ, NUP, AND NF

Bearing Number	Available Styles					Boundary Dimensions						
						d	D	B	r_{min}	r_{1min}	F_w	E_w
						mm (in)	mm (in)	mm (in)	mm (in)	mm (in)	mm (in)	mm (in)
1005	NU					25 (0.9843)	47 (1.8504)	12 (0.4724)	0.6 (0.0237)	0.3 (0.0119)	30.5 (1.2008)	
1006	NU			N		30 (1.1811)	55 (2.1654)	13 (0.5118)	1.0 (0.0394)	0.6 (0.0237)	36.5 (1.4370)	48.5 (1.9094)
1007	NU	NJ		N		35 (1.3780)	62 (2.4409)	14 (0.5512)	1.0 (0.0394)	0.6 (0.0237)	42.0 (1.6535)	55.0 (2.1654)
1008	NU	NJ	NUP	N		40 (1.5748)	68 (2.6772)	15 (0.5906)	1.0 (0.0394)	0.6 (0.0237)	47.0 (1.8504)	61.0 (2.4016)
1009	NU			N	NF	45 (1.7717)	75 (2.9528)	16 (0.6299)	1.0 (0.0394)	0.6 (0.0237)	52.5 (2.0669)	67.5 (2.6575)
1010	NU	NJ	NUP	N		50 (1.9685)	80 (3.1496)	16 (0.6299)	1.0 (0.0394)	0.6 (0.0237)	57.5 (2.2638)	72.5 (2.8543)
1011	NU	NJ		N		55 (2.1654)	90 (3.5433)	18 (0.7087)	1.1 (0.0434)	1.0 (0.0394)	64.5 (2.5394)	80.5 (3.1693)
1012	NU	NJ		N	NF	60 (2.3622)	95 (3.7402)	18 (0.7087)	1.1 (0.0434)	1.0 (0.0394)	69.5 (2.7362)	85.5 (3.3661)
1013	NU	NJ		N	NF	65 (2.5591)	100 (3.9370)	18 (0.7087)	1.1 (0.0434)	1.0 (0.0394)	74.5 (2.9331)	90.5 (3.5630)
1014	NU	NJ	NUP	N	NF	70 (2.7559)	110 (4.3307)	20 (0.7874)	1.1 (0.0434)	1.0 (0.0394)	80.0 (3.1496)	100.0 (3.9370)
1015	NU			N	NF	75 (2.9528)	115 (4.5276)	20 (0.7874)	1.1 (0.0434)	1.0 (0.0394)	85.0 (3.3465)	105.0 (4.1339)
1016	NU		NUP	N		80 (3.1496)	125 (4.9213)	22 (0.8661)	1.1 (0.0434)	1.0 (0.0394)	91.5 (3.6024)	113.5 (4.4685)
1017	NU			N		85 (3.3465)	130 (5.1181)	22 (0.8661)	1.1 (0.0434)	1.0 (0.0394)	96.5 (3.7992)	118.5 (4.6654)
1018	NU		NUP	N		90 (3.5433)	140 (5.5118)	24 (0.9449)	1.5 (0.0591)	1.1 (0.0434)	103.0 (4.0551)	127.0 (5.0000)
1019	NU	NJ		N		95 (3.7402)	145 (5.7087)	24 (0.9449)	1.5 (0.0591)	1.1 (0.0434)	108.0 (4.2520)	132.0 (5.1969)
1020	NU	NJ	NUP	N		100 (3.9370)	150 (5.9055)	24 (0.9449)	1.5 (0.0591)	1.1 (0.0434)	113.0 (4.4488)	137.0 (5.3937)
1021	NU			N	NF	105 (4.1339)	160 (6.2992)	26 (1.0236)	2.0 (0.0788)	1.1 (0.0434)	119.5 (4.7047)	145.5 (5.7283)
1022	NU	NJ		N	NF	110 (4.3307)	170 (6.6929)	28 (1.1024)	2.0 (0.0788)	1.1 (0.0434)	125.0 (4.9213)	155.0 (6.1024)
1024	NU	NJ	NUP	N		120 (4.7244)	180 (7.0866)	28 (1.1024)	2.0 (0.0788)	1.1 (0.0434)	135.0 (5.3150)	165.0 (6.4961)
1026	NU	NJ		N	NF	130 (5.1181)	200 (7.8740)	33 (1.2992)	2.0 (0.0788)	1.1 (0.0434)	148.0 (5.8268)	182.0 (7.1654)

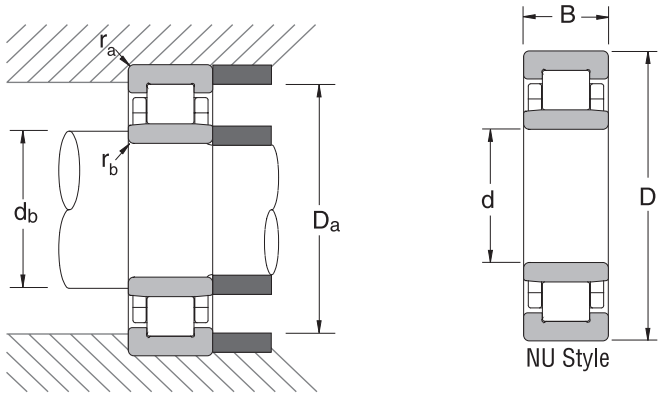

Common Options	
M	Machined Brass Cage
W	Pressed Steel Cage
ET	High Capacity Polyamide Cage
CO*	Normal Internal Clearance
C3	Greater than Normal Internal Clearance

*Not shown in part number

Bearing Number	Basic Load Ratings		Limiting Speeds (RPM)		Abutment and Fillet Dimensions									Bearing Weight (Approx.)
	C_r	C_{0r}			d_a (min)	d_b (min)	d_b (max)	d_c (min)	D_a (max)	D_b (max)	D_b (min)	r_a* (max)	r_b* (max)	
	N (lbs)	N (lbs)	Grease	Oil	mm (in)	mm (in)	mm (in)	mm (in)	mm (in)	mm (in)	mm (in)	mm (in)	mm (in)	kg (lbs)
1005	14300 (3200)	13100 (2940)	15000	18000		27.0 (1.063)	30 (1.181)	32 (1.260)	43.0 (1.693)			0.6 (0.023)	0.3 (0.011)	0.094 (0.21)
1006	19700 (4400)	19600 (4400)	12000	15000	35.0 (1.378)	34.0 (1.339)	36 (1.417)	38 (1.496)	50.0 (1.969)	51.0 (2.008)	49 (1.929)	1.0 (0.039)	0.5 (0.019)	0.136 (0.30)
1007	22600 (5100)	23200 (5200)	11000	13000	40.0 (1.575)	39.0 (1.535)	41 (1.614)	44 (1.732)	57.0 (2.244)	58.0 (2.283)	56 (2.205)	1.0 (0.039)	0.5 (0.019)	0.18 (0.40)
1008	27300 (6150)	29000 (6500)	10000	12000	45.0 (1.772)	44.0 (1.732)	46 (1.811)	49 (1.929)	63.0 (2.480)	64.0 (2.520)	62 (2.441)	1.0 (0.039)	0.6 (0.023)	0.223 (0.49)
1009	32500 (7300)	35500 (8000)	9000	11000	50.0 (1.969)	49.0 (1.929)	51 (2.008)	54 (2.126)	70.0 (2.756)	71.0 (2.795)	68 (2.677)	1.0 (0.039)	0.6 (0.023)	0.279 (0.61)
1010	32000 (7200)	36000 (8100)	8000	10000	55.0 (2.165)	54.0 (2.126)	56 (2.205)	59 (2.323)	75.0 (2.953)	76.0 (2.992)	73 (2.874)	1.0 (0.039)	0.6 (0.023)	0.301 (0.66)
1011	37500 (8450)	44000 (9850)	7500	9000	61.5 (2.421)	60.0 (2.362)	63 (2.480)	66 (2.598)	83.5 (3.287)	85.0 (3.346)	82 (3.228)	1.0 (0.039)	1.0 (0.039)	0.445 (0.98)
1012	40000 (9000)	48500 (10900)	6700	8500	66.5 (2.618)	65.0 (2.559)	68 (2.677)	71 (2.795)	88.5 (3.484)	90.0 (3.543)	87 (3.425)	1.0 (0.039)	1.0 (0.039)	0.474 (1.04)
1013	41000 (9250)	51000 (11500)	6300	8000	71.5 (2.815)	70.0 (2.756)	73 (2.874)	76 (2.992)	93.5 (3.681)	95.0 (3.740)	92 (3.622)	1.0 (0.039)	1.0 (0.039)	0.504 (1.11)
1014	58500 (13100)	70500 (15800)	6000	7100	76.5 (3.012)	75.0 (2.953)	79 (3.110)	82 (3.228)	103.5 (4.075)	105.0 (4.134)	101 (3.976)	1.0 (0.039)	1.0 (0.039)	0.693 (1.52)
1015	60000 (13500)	74500 (16700)	5600	6700	81.5 (3.209)	80.0 (3.150)	83 (3.268)	87 (3.425)	108.5 (4.272)	110.0 (4.331)	106 (4.173)	1.0 (0.039)	1.0 (0.039)	0.731 (1.61)
1016	72500 (16300)	90500 (20400)	5300	6300	86.5 (3.406)	85.0 (3.346)	90 (3.543)	94 (3.701)	118.5 (4.665)	120.0 (4.724)	115 (4.528)	1.0 (0.039)	1.0 (0.039)	0.969 (2.13)
1017	74500 (16700)	95500 (21500)	5000	6000	91.5 (3.602)	90.0 (3.543)	95 (3.740)	99 (3.898)	123.5 (4.862)	125.0 (4.921)	120 (4.724)	1.0 (0.039)	1.0 (0.039)	1.01 (2.22)
1018	88000 (19800)	114000 (25700)	4500	5600	98.0 (3.858)	96.5 (3.799)	101 (3.976)	106 (4.173)	132.0 (5.197)	133.5 (5.256)	129 (5.079)	1.5 (0.059)	1.0 (0.039)	1.35 (2.97)
1019	90500 (20400)	120000 (27000)	4300	5300	103.0 (4.055)	101.5 (3.996)	106 (4.173)	111 (4.370)	137.0 (5.394)	138.5 (5.453)	134 (5.276)	1.5 (0.059)	1.0 (0.039)	1.41 (3.10)
1020	93000 (20900)	126000 (28300)	4300	5300	108.0 (4.252)	106.5 (4.193)	111 (4.370)	116 (4.567)	142.0 (5.591)	143.5 (5.650)	139 (5.472)	1.5 (0.059)	1.0 (0.039)	1.47 (3.23)
1021	109000 (24500)	149000 (33500)	4000	4800	114.0 (4.488)	111.5 (4.390)	118 (4.646)	122 (4.803)	151.0 (5.945)	153.5 (6.043)	147 (5.787)	2.0 (0.078)	1.0 (0.039)	1.83 (4.03)
1022	131000 (29500)	174000 (39000)	3800	4500	119.0 (4.685)	116.5 (4.587)	123 (4.843)	128 (5.039)	161.0 (6.339)	163.5 (6.437)	157 (6.181)	2.0 (0.078)	1.0 (0.039)	2.27 (4.99)
1024	139000 (31000)	191000 (43000)	3400	4300	129.0 (5.079)	126.5 (4.980)	133 (5.236)	138 (5.433)	171.0 (6.732)	173.5 (6.831)	167 (6.575)	2.0 (0.078)	1.0 (0.039)	2.43 (5.35)
1026	172000 (38500)	238000 (53500)	3200	3800	139.0 (5.472)	136.5 (5.374)	146 (5.748)	151 (5.945)	191.0 (7.520)	193.5 (7.618)	184 (7.244)	2.0 (0.078)	1.0 (0.039)	3.66 (8.05)

C_r = Dynamic Radial Load Rating C_{or} = Static Radial Load Rating *Maximum fillet which corner radius of bearing will clear.

CYLINDRICAL ROLLER BEARING: 1000 SERIES (CONT.)

NU, N, NJ, NUP, AND NF

Bearing Number	Available Styles					Boundary Dimensions						
						d	D	B	r_{min}	r_{1min}	F_w	E_w
						mm (in)	mm (in)	mm (in)	mm (in)	mm (in)	mm (in)	mm (in)
1028	NU	NJ	NUP	N	NF	140 (5.5118)	210 (8.2677)	33 (1.2992)	2.0 (0.0788)	1.1 (0.0434)	158.0 (6.2205)	192.0 (7.5591)
1030	NU	NJ		N	NF	150 (5.9055)	225 (8.8583)	35 (1.3780)	2.1 (0.0827)	1.5 (0.0591)	169.5 (6.6732)	205.5 (8.0906)
1032	NU	NJ		N	NF	160 (6.2992)	240 (9.4488)	38 (1.4961)	2.1 (0.0827)	1.5 (0.0591)	180.0 (7.0866)	220.0 (8.6614)
1034	NU	NJ		N		170 (6.6929)	260 (10.2362)	42 (1.6535)	2.1 (0.0827)	2.1 (0.0827)	193.0 (7.5984)	237.0 (9.3307)
1036	NU	NJ		N	NF	180 (7.0866)	280 (11.0236)	46 (1.8110)	2.1 (0.0827)	2.1 (0.0827)	205.0 (8.0709)	255.0 (10.0394)
1038	NU	NJ		N		190 (7.4803)	290 (11.4173)	46 (1.8110)	2.1 (0.0827)	2.1 (0.0827)	215.0 (8.4646)	265.0 (10.4331)
1040	NU	NJ		N	NF	200 (7.8740)	310 (12.2047)	51 (2.0079)	2.1 (0.0827)	2.1 (0.0827)	229.0 (9.0157)	281.0 (11.0630)
1044	NU	NJ		N		220 (8.6614)	340 (13.3858)	56 (2.2047)	3.0 (0.1182)	3.0 (0.1182)	250.0 (9.8425)	310.0 (12.2047)
1048	NU	NJ		N		240 (9.4488)	360 (14.1732)	56 (2.2047)	3.0 (0.1182)	3.0 (0.1182)	270.0 (10.6299)	330.0 (12.9921)
1052	NU	NJ		N	NF	260 (10.2362)	400 (15.7480)	65 (2.5591)	4.0 (0.1575)	4.0 (0.1575)	296.0 (11.6535)	364.0 (14.3307)
1056	NU	NJ	NUP	N	NF	280 (11.0236)	420 (16.5354)	65 (2.5591)	4.0 (0.1575)	4.0 (0.1575)	316.0 (12.4409)	384.0 (15.1181)
1060	NU	NJ		N	NF	300 (11.8110)	460 (18.1102)	74 (2.9134)	4.0 (0.1575)	4.0 (0.1575)	340.0 (13.3858)	420.0 (16.5354)
1064	NU			N	NF	320 (12.5984)	480 (18.8976)	74 (2.9134)	4.0 (0.1575)	4.0 (0.1575)	360.0 (14.1732)	440.0 (17.3228)
1068	NU	NJ		N	NF	340 (13.3858)	520 (20.4724)	82 (3.2283)	5.0 (0.1969)	5.0 (0.1969)	385.0 (15.1575)	475.0 (18.7008)
1072	NU			N	NF	360 (14.1732)	540 (21.2598)	82 (3.2283)	5.0 (0.1969)	5.0 (0.1969)	405.0 (15.9449)	495.0 (19.4882)
1076	NU					380 (14.9606)	560 (22.0472)	82 (3.2283)	5.0 (0.1969)	5.0 (0.1969)	425.0 (16.7323)	(0.0000)
1080	NU		NUP	N		400 (15.7480)	600 (23.6220)	90 (3.5433)	5.0 (0.1969)	5.0 (0.1969)	450.0 (17.7165)	550.0 (21.6535)
1084	NU			N		420 (16.5354)	620 (24.4094)	90 (3.5433)	5.0 (0.1969)	5.0 (0.1969)	470.0 (18.5039)	570.0 (22.4409)
1088	NU					440 (17.3228)	650 (25.5906)	94 (3.7008)	6.0 (0.2363)	6.0 (0.2363)	493.0 (19.4094)	(0.0000)
1092	NU		NUP	N		460 (18.1102)	680 (26.7717)	100 (3.9370)	6.0 (0.2363)	6.0 (0.2363)	516.0 (20.3150)	624.0 (24.5669)
1096	NU	NJ		N		480 (18.8976)	700 (27.5591)	100 (3.9370)	6.0 (0.2363)	6.0 (0.2363)	536.0 (21.1024)	644.0 (25.3543)
10/500	NU			N		500 (19.6850)	720 (28.3465)	100 (3.9370)	6.0 (0.2363)	6.0 (0.2363)	556.0 (21.8898)	664.0 (26.1417)

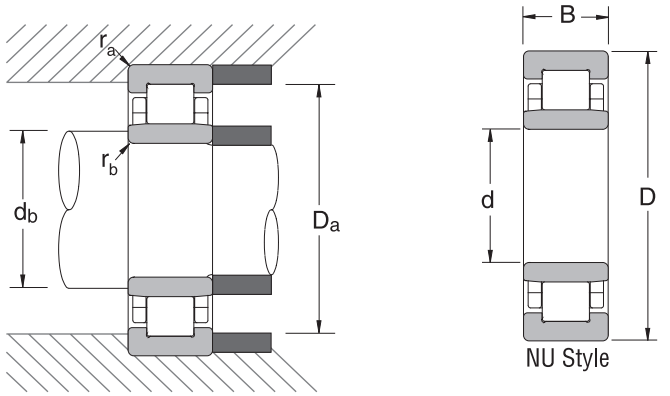

Common Options	
M	Machined Brass Cage
W	Pressed Steel Cage
CO*	Normal Internal Clearance
C3	Greater than Normal Internal Clearance

*Not shown in part number

Bearing Number	Basic Load Ratings		Limiting Speeds (RPM)		Abutment and Fillet Dimensions									Bearing Weight (Approx.)
	C_r	C_{0r}			d_a (min)	d_b (min)	d_b (max)	d_c (min)	D_a (max)	D_b (max)	D_b (min)	r_{a*} (max)	r_{b*} (max)	
	N (lbs)	N (lbs)	Grease	Oil	mm (in)	mm (in)	mm (in)	mm (in)	mm (in)	mm (in)	mm (in)	mm (in)	mm (in)	kg (lbs)
1028	176000 (39500)	250000 (56000)	3000	3600	149.0 (5.866)	146.5 (5.768)	156 (6.142)	161 (6.339)	201.0 (7.913)	203.5 (8.012)	194.0 (7.638)	2.0 (0.078)	1.0 (0.039)	3.87 (8.51)
1030	202000 (45500)	294000 (66000)	2800	3400	161.0 (6.339)	158.0 (6.220)	167 (6.575)	173 (6.811)	214.0 (8.425)	217.0 (8.543)	208.0 (8.189)	2.0 (0.078)	1.5 (0.059)	4.77 (10.5)
1032	238000 (53500)	340000 (77000)	2600	3200	171.0 (6.732)	168.0 (6.614)	178 (7.008)	184 (7.244)	229.0 (9.016)	232.0 (9.134)	222.0 (8.740)	2.0 (0.078)	1.5 (0.059)	5.81 (12.8)
1034	287000 (64500)	415000 (94000)	2400	2800	181.0 (7.126)	181.0 (7.126)	190 (7.480)	197 (7.756)	249.0 (9.803)	249.0 (9.803)	239.0 (9.409)	2.0 (0.078)	2.0 (0.078)	7.91 (17.4)
1036	355000 (79500)	510000 (115000)	2200	2600	191.0 (7.520)	191.0 (7.520)	202 (7.953)	209 (8.228)	269.0 (10.591)	269.0 (10.591)	258.0 (10.157)	2.0 (0.078)	2.0 (0.078)	10.2 (22.4)
1038	365000 (81500)	535000 (120000)	2000	2600	201.0 (7.913)	201.0 (7.913)	212 (8.346)	219 (8.622)	279.0 (10.984)	279.0 (10.984)	268.0 (10.551)	2.0 (0.078)	2.0 (0.078)	10.7 (23.5)
1040	390000 (87500)	580000 (131000)	2000	2400	211.0 (8.307)	211.0 (8.307)	226 (8.898)	233 (9.173)	299.0 (11.772)	299.0 (11.772)	284.0 (11.181)	2.0 (0.078)	2.0 (0.078)	14 (30.8)
1044	500000 (113000)	750000 (168000)	1800	2200	233.0 (9.173)	233.0 (9.173)	247 (9.724)	254 (10.000)	327.0 (12.874)	327.0 (12.874)	313.0 (12.323)	2.5 (0.098)	2.5 (0.098)	18.2 (40.0)
1048	530000 (119000)	820000 (184000)	1600	2000	253.0 (9.961)	253.0 (9.961)	266 (10.472)	275 (10.827)	347.0 (13.661)	347.0 (13.661)	333.0 (13.110)	2.5 (0.098)	2.5 (0.098)	19.5 (42.9)
1052	645000 (145000)	1000000 (224000)	1500	1800	276.0 (10.866)	276.0 (10.866)	292 (11.496)	300 (11.811)	384.0 (15.118)	384.0 (15.118)	367.0 (14.449)	3.0 (0.118)	3.0 (0.118)	29.1 (64.0)
1056	660000 (148000)	1050000 (235000)	1400	1700	296.0 (11.654)	296.0 (11.654)	312 (12.283)	320 (12.598)	404.0 (15.906)	404.0 (15.906)	387.0 (15.236)	3.0 (0.118)	3.0 (0.118)	30.8 (67.8)
1060	885000 (198000)	1400000 (315000)	1300	1500	316.0 (12.441)	316.0 (12.441)	336 (13.228)	344 (13.543)	444.0 (17.480)	444.0 (17.480)	424.0 (16.693)	3.0 (0.118)	3.0 (0.118)	43.7 (96.1)
1064	905000 (203000)	1470000 (330000)	1200	1400	336.0 (13.228)	336.0 (13.228)	356 (14.016)	365 (14.370)	464.0 (18.268)	464.0 (18.268)	444.0 (17.480)	3.0 (0.118)	3.0 (0.118)	46.1 (101)
1068	1080000 (244000)	1740000 (390000)	1100	1300	360.0 (14.173)	360.0 (14.173)	381 (15.000)	390 (15.354)	500.0 (19.685)	500.0 (19.685)	479.0 (18.858)	4.0 (0.157)	4.0 (0.157)	61.8 (136)
1072	1110000 (250000)	1830000 (410000)	1000	1300	380.0 (14.961)	380.0 (14.961)	400 (15.748)	410 (16.142)	520.0 (20.472)	520.0 (20.472)	499.0 (19.646)	4.0 (0.157)	4.0 (0.157)	64.6 (142)
1076	1140000 (255000)	1910000 (430000)	1000	1200		400.0 (15.748)	420 (16.535)	430 (16.929)	540.0 (21.260)			4.0 (0.157)	4.0 (0.157)	67.5 (149)
1080	1360000 (305000)	2280000 (510000)	900	1100	420.0 (16.535)	420.0 (16.535)	445 (17.520)	455 (17.913)	580.0 (22.835)	580.0 (22.835)	554.5 (21.831)	4.0 (0.157)	4.0 (0.157)	88.2 (194)
1084	1390000 (315000)	2380000 (535000)	850	1100	440.0 (17.323)	440.0 (17.323)	465 (18.307)	475 (18.701)	600.0 (23.622)	600.0 (23.622)	574.5 (22.618)	4.0 (0.157)	4.0 (0.157)	91.7 (202)
1088	1470000 (330000)	2530000 (570000)	800	1000		466.0 (18.346)	488 (19.213)	498 (19.606)	624.0 (24.567)			5.0 (0.196)	5.0 (0.196)	105 (231)
1092	1580000 (355000)	2740000 (615000)	750	950	486.0 (19.134)	486.0 (19.134)	511 (20.118)	521 (20.512)	654.0 (25.748)	654.0 (25.748)	628.5 (24.744)	5.0 (0.196)	5.0 (0.196)	123 (271)
1096	1620000 (365000)	2860000 (640000)	750	900	506.0 (19.921)	506.0 (19.921)	531 (20.906)	541 (21.299)	674.0 (26.535)	674.0 (26.535)	654.0 (25.748)	5.0 (0.196)	5.0 (0.196)	127 (279)
10/500	1660000 (370000)	2970000 (670000)	710	850	526.0 (20.709)	526.0 (20.709)	551 (21.693)	558 (21.969)	694.0 (27.323)	694.0 (27.323)	674.0 (26.535)	5.0 (0.196)	5.0 (0.196)	131 (288)

C_r = Dynamic Radial Load Rating C_{or} = Static Radial Load Rating *Maximum fillet which corner radius of bearing will clear.

CYLINDRICAL ROLLER BEARING: 2200 SERIES

NU, NJ AND NUP

Bearing Number	Available Styles			Boundary Dimensions					
				d	D	B	r_{min}	r_{1min}	F_w
				mm (in)	mm (in)	mm (in)	mm (in)	mm (in)	mm (in)
2204E	NU	NJ	NUP	20 (0.7874)	47 (1.8504)	18 (0.7087)	1.0 (0.0394)	0.6 (0.0237)	26.5 (1.0433)
2205E*	NU	NJ	NUP	25 (0.9843)	52 (2.0472)	18 (0.7087)	1.0 (0.0394)	0.6 (0.0237)	31.5 (1.2402)
2206E*	NU	NJ	NUP	30 (1.1811)	62 (2.4409)	20 (0.7874)	1.0 (0.0394)	0.6 (0.0237)	37.5 (1.4764)
2207E*	NU	NJ	NUP	35 (1.3780)	72 (2.8346)	23 (0.9055)	1.1 (0.0434)	0.6 (0.0237)	44.0 (1.7323)
2208E*	NU	NJ	NUP	40 (1.5748)	80 (3.1496)	23 (0.9055)	1.1 (0.0434)	1.1 (0.0434)	49.5 (1.9488)
2209E*	NU	NJ	NUP	45 (1.7717)	85 (3.3465)	23 (0.9055)	1.1 (0.0434)	1.1 (0.0434)	54.5 (2.1457)
2210E*	NU	NJ	NUP	50 (1.9685)	90 (3.5433)	23 (0.9055)	1.1 (0.0434)	1.1 (0.0434)	59.5 (2.3425)
2211E*	NU	NJ	NUP	55 (2.1654)	100 (3.9370)	25 (0.9843)	1.5 (0.0591)	1.1 (0.0434)	66.0 (2.5984)
2212E*	NU	NJ	NUP	60 (2.3622)	110 (4.3307)	28 (1.1024)	1.5 (0.0591)	1.5 (0.0591)	72.0 (2.8346)
2213E*	NU	NJ	NUP	65 (2.5591)	120 (4.7244)	31 (1.2205)	1.5 (0.0591)	1.5 (0.0591)	78.5 (3.0906)
2214E*	NU	NJ	NUP	70 (2.7559)	125 (4.9213)	31 (1.2205)	1.5 (0.0591)	1.5 (0.0591)	83.5 (3.2874)
2215E*	NU	NJ	NUP	75 (2.9528)	130 (5.1181)	31 (1.2205)	1.5 (0.0591)	1.5 (0.0591)	88.5 (3.4843)
2216E*	NU	NJ	NUP	80 (3.1496)	140 (5.5118)	33 (1.2992)	2.0 (0.0788)	2.0 (0.0788)	95.3 (3.7520)
2217E*	NU	NJ	NUP	85 (3.3465)	150 (5.9055)	36 (1.4173)	2.0 (0.0788)	2.0 (0.0788)	100.5 (3.9567)
2218E*	NU	NJ	NUP	90 (3.5433)	160 (6.2992)	40 (1.5748)	2.0 (0.0788)	2 (0.0788)	107.0 (4.2126)
2219E*	NU	NJ	NUP	95 (3.7402)	170 (6.6929)	43 (1.6929)	2.1 (0.0827)	2.1 (0.0827)	112.5 (4.4291)
2220E*	NU	NJ	NUP	100 (3.9370)	180 (7.0866)	46 (1.8110)	2.1 (0.0827)	2.1 (0.0827)	119.0 (4.6850)
2222E*	NU	NJ	NUP	110 (4.3307)	200 (7.8740)	53 (2.0866)	2.1 (0.0827)	2.1 (0.0827)	132.5 (5.2165)
2224E*	NU	NJ	NUP	120 (4.7244)	215 (8.4646)	58 (2.2835)	2.1 (0.0827)	2.1 (0.0827)	143.5 (5.6496)
2226E*	NU	NJ	NUP	130 (5.1181)	230 (9.0551)	64 (2.5197)	3.0 (0.1182)	3.0 (0.1182)	153.5 (6.0433)
2228E*	NU	NJ	NUP	140 (5.5118)	250 (9.8425)	68 (2.6772)	3.0 (0.1182)	3.0 (0.1182)	169.0 (6.6535)
2230E*	NU	NJ	NUP	150 (5.9055)	270 (10.6299)	73 (2.8740)	3.0 (0.1182)	3.0 (0.1182)	182.0 (7.1654)
2232E*	NU	NJ	NUP	160 (6.2992)	290 (11.4173)	80 (3.1496)	3.0 (0.1182)	3.0 (0.1182)	193.0 (7.5984)
2234E*	NU	NJ	NUP	170 (6.6929)	310 (12.2047)	86 (3.3858)	4.0 (0.1575)	4.0 (0.1575)	205.0 (8.0709)
2236E*	NU	NJ	NUP	180 (7.0866)	320 (12.5984)	86 (3.3858)	4.0 (0.1575)	4.0 (0.1575)	215.0 (8.4646)
2238E*	NU	NJ	NUP	190 (7.4803)	340 (13.3858)	92 (3.6220)	4.0 (0.1575)	4.0 (0.1575)	228.0 (8.9764)
2240E*	NU	NJ	NUP	200 (7.8740)	360 (14.1732)	98 (3.8583)	4.0 (0.1575)	4.0 (0.1575)	241.0 (9.4882)

*Indicates NSK (HPS) High Performance Standard bearing.

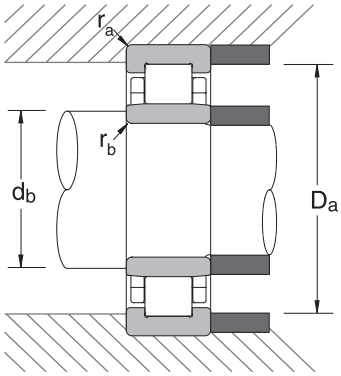

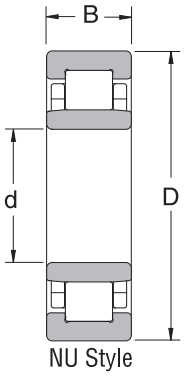

Common Options	
M	Machined Brass Cage
W	Pressed Steel Cage
ET	High Capacity Polyamide Cage
CO*	Normal Internal Clearance
C3	Greater than Normal Internal Clearance
E	Electric Motor Quality

*Not shown in part number

Bearing Number	Basic Load Ratings		Limiting Speeds (RPM)		Abutment and Fillet Dimensions							Bearing Weight (Approx.)
	C_r	C_{0r}			d_b (min)	d_b (max)	d_c (min)	d_d (max)	D_a (max)	r_a** (max)	r_b** (max)	
	N (lbs)	N (lbs)	Grease	Oil	mm (in)	mm (in)	mm (in)	mm (in)	mm (in)	mm (in)	mm (in)	kg (lbs)
2204E	30500 (6900)	28300 (6350)	13000	16000	24.0 (0.945)	25 (0.984)	29 (1.142)	32 (1.260)	42.0 (1.654)	1.0 (0.039)	0.6 (0.023)	0.138 (0.30)
2205E*	40000 (9000)	34500 (7800)	12000	14000	29.0 (1.142)	30 (1.181)	34 (1.339)	37 (1.457)	47.0 (1.850)	1.0 (0.039)	0.6 (0.023)	0.16 (0.35)
2206E*	56500 (12600)	50000 (11200)	9500	12000	34.0 (1.339)	36 (1.417)	40 (1.575)	44 (1.732)	57.0 (2.244)	1.0 (0.039)	0.6 (0.023)	0.255 (0.56)
2207E*	71000 (15900)	65500 (14700)	8500	10000	39.0 (1.535)	42 (1.654)	46 (1.811)	50 (1.969)	65.5 (2.579)	1.0 (0.039)	0.6 (0.023)	0.40 (0.88)
2208E*	83000 (18700)	77500 (17400)	7500	9000	46.5 (1.831)	48 (1.890)	52 (2.047)	56 (2.205)	73.5 (2.894)	1.0 (0.039)	1.0 (0.039)	0.48 (1.06)
2209E*	87500 (19700)	84500 (19000)	6700	8500	51.5 (2.028)	52 (2.047)	57 (2.244)	61 (2.402)	78.5 (3.091)	1.0 (0.039)	1.0 (0.039)	0.521 (1.15)
2210E*	96000 (21500)	97000 (21900)	6300	8000	56.5 (2.224)	57 (2.244)	62 (2.441)	67 (2.638)	83.5 (3.287)	1.0 (0.039)	1.0 (0.039)	0.562 (1.24)
2211E*	117000 (26200)	122000 (27300)	5600	7100	61.5 (2.421)	64 (2.520)	68 (2.677)	73 (2.874)	92.0 (3.622)	1.5 (0.059)	1.0 (0.039)	0.783 (1.72)
2212E*	151000 (34000)	157000 (35000)	5300	6300	68.0 (2.677)	70 (2.756)	75 (2.953)	80 (3.150)	102.0 (4.016)	1.5 (0.059)	1.5 (0.059)	1.06 (2.33)
2213E*	171000 (38500)	181000 (40500)	4800	6000	73.0 (2.874)	76 (2.992)	81 (3.189)	87 (3.425)	112.0 (4.409)	1.5 (0.059)	1.5 (0.059)	1.41 (3.10)
2214E*	179000 (40000)	194000 (43500)	4500	5600	78.0 (3.071)	81 (3.189)	86 (3.386)	92 (3.622)	117.0 (4.606)	1.5 (0.059)	1.5 (0.059)	1.49 (3.28)
2215E*	186000 (42000)	207000 (46500)	4300	5300	83.0 (3.268)	86 (3.386)	90 (3.543)	96 (3.780)	122.0 (4.803)	1.5 (0.059)	1.5 (0.059)	1.57 (3.45)
2216E*	214000 (48000)	243000 (54500)	4000	5000	89.0 (3.504)	92 (3.622)	97 (3.819)	104 (4.094)	131.0 (5.157)	2.0 (0.078)	2.0 (0.078)	1.96 (4.31)
2217E*	250000 (56000)	279000 (62500)	3800	4500	94.0 (3.701)	98 (3.858)	104 (4.094)	110 (4.331)	141.0 (5.551)	2.0 (0.078)	2.0 (0.078)	2.44 (5.37)
2218E*	274000 (61500)	315000 (70500)	3600	4300	99.0 (3.898)	104 (4.094)	109 (4.291)	116 (4.567)	151.0 (5.945)	2.0 (0.078)	2.0 (0.078)	3.11 (6.84)
2219E*	325000 (72500)	370000 (83500)	3400	4000	106.0 (4.173)	110 (4.331)	116 (4.567)	123 (4.843)	159.0 (6.260)	2.0 (0.078)	2.0 (0.078)	3.81 (8.38)
2220E*	410000 (92100)	445000 (100000)	3200	3800	111.0 (4.370)	116 (4.567)	122 (4.803)	130 (5.118)	169.0 (6.654)	2.0 (0.078)	2.0 (0.078)	4.69 (10.3)
2222E*	470000 (105600)	515000 (116000)	2800	3400	121.0 (4.764)	129 (5.079)	135 (5.315)	144 (5.669)	189.0 (7.441)	2.0 (0.078)	2.0 (0.078)	7.65 (16.8)
2224E*	555000 (124700)	620000 (139000)	2600	3200	131.0 (5.157)	140 (5.512)	146 (5.748)	156 (6.142)	204.0 (8.031)	2.0 (0.078)	2.0 (0.078)	9.51 (20.9)
2226E*	650000 (146000)	735000 (166000)	2400	3000	143.0 (5.630)	150 (5.906)	158 (6.220)	168 (6.614)	217.0 (8.543)	2.5 (0.098)	2.5 (0.098)	9.44 (20.8)
2228E*	675000 (151700)	790000 (178000)	2200	2800	153.0 (6.024)	165 (6.496)	171 (6.732)	182 (7.165)	237.0 (9.331)	2.5 (0.098)	2.5 (0.098)	15.2 (33.4)
2230E*	780000 (175000)	930000 (209000)	2000	2600	163.0 (6.417)	177 (6.969)	184 (7.244)	196 (7.717)	257.0 (10.118)	2.5 (0.098)	2.5 (0.098)	19.3 (42.5)
2232E*	995000 (223000)	1190000 (268000)	1900	2400	173.0 (6.811)	188 (7.402)	197 (7.756)	210 (8.268)	277.0 (10.906)	2.5 (0.098)	2.5 (0.098)	24.5 (53.9)
2234E*	1140000 (256000)	1330000 (299000)	1800	2200	186.0 (7.323)	200 (7.874)	211 (8.307)	223 (8.780)	294.0 (11.575)	3.0 (0.118)	3.0 (0.118)	29.9 (65.8)
2236E*	1240000 (278000)	1510000 (340000)	1700	2000	196.0 (7.717)	210 (8.268)	221 (8.701)	233 (9.173)	304.0 (11.969)	3.0 (0.118)	3.0 (0.118)	31.4 (69.1)
2238E*	1360000 (305000)	1670000 (375000)	1600	2000	206.0 (8.110)	223 (8.780)	234 (9.213)	247 (9.724)	324.0 (12.756)	3.0 (0.118)	3.0 (0.118)	38.3 (84.3)
2240E*	1500000 (337000)	1870000 (420000)	1500	1800	216.0 (8.504)	235 (9.252)	247 (9.724)	261 (10.276)	344.0 (13.543)	3.0 (0.118)	3.0 (0.118)	46.1 (101)

C_r = Dynamic Radial Load Rating C_{or} = Static Radial Load Rating **Maximum fillet which corner radius of bearing will clear.

CYLINDRICAL ROLLER BEARING: 2300 SERIES

NU, NJ AND NUP

Bearing Number	Available Styles			Boundary Dimensions					
				d	D	B	r_{min}	r_{1min}	F_W
				mm (in)	mm (in)	mm (in)	mm (in)	mm (in)	mm (in)
2304E	NU	NJ	NUP	20 (0.7874)	52 (2.0472)	21 (0.8268)	1.1 (0.0434)	0.6 (0.0237)	27.5 (1.0827)
2305E*	NU	NJ	NUP	25 (0.9843)	62 (2.4409)	24 (0.9449)	1.1 (0.0434)	1.1 (0.0434)	34.0 (1.3386)
2306E*	NU	NJ	NUP	30 (1.1811)	72 (2.8346)	27 (1.0630)	1.1 (0.0434)	1.1 (0.0434)	40.5 (1.5945)
2307E*	NU	NJ	NUP	35 (1.3780)	80 (3.1496)	31 (1.2205)	1.5 (0.0591)	1.1 (0.0434)	46.2 (1.8189)
2308E*	NU	NJ	NUP	40 (1.5748)	90 (3.5433)	33 (1.2992)	1.5 (0.0591)	1.5 (0.0591)	52 (2.0472)
2309E*	NU	NJ	NUP	45 (1.7717)	100 (3.9370)	36 (1.4173)	1.5 (0.0591)	1.5 (0.0591)	58.5 (2.3031)
2310E*	NU	NJ	NUP	50 (1.9685)	110 (4.3307)	40 (1.5748)	2.0 (0.0788)	2.0 (0.0788)	65 (2.5591)
2311E*	NU	NJ	NUP	55 (2.1654)	120 (4.7244)	43 (1.6929)	2.0 (0.0788)	2.0 (0.0788)	70.5 (2.7756)
2312E*	NU	NJ	NUP	60 (2.3622)	130 (5.1181)	46 (1.8110)	2.1 (0.0827)	2.1 (0.0827)	77.0 (3.0315)
2313E*	NU	NJ	NUP	65 (2.5591)	140 (5.5118)	48 (1.8898)	2.1 (0.0827)	2.1 (0.0827)	82.5 (3.2480)
2314E*	NU	NJ	NUP	70 (2.7559)	150 (5.9055)	51 (2.0079)	2.1 (0.0827)	2.1 (0.0827)	89.0 (3.5039)
2315E*	NU	NJ	NUP	75 (2.9528)	160 (6.2992)	55 (2.1654)	2.1 (0.0827)	2.1 (0.0827)	95.0 (3.7402)
2316E*	NU	NJ	NUP	80 (3.1496)	170 (6.6929)	58 (2.2835)	2.1 (0.0827)	2.1 (0.0827)	101.0 (3.9764)
2317E*	NU	NJ	NUP	85 (3.3465)	180 (7.0866)	60 (2.3622)	3.0 (0.1182)	3.0 (0.1182)	108.0 (4.2520)
2318E*	NU	NJ	NUP	90 (3.5433)	190 (7.4803)	64 (2.5197)	3.0 (0.1182)	3.0 (0.1182)	113.5 (4.4685)
2319E*	NU	NJ	NUP	95 (3.7402)	200 (7.8740)	67 (2.6378)	3.0 (0.1182)	3.0 (0.1182)	121.5 (4.7835)
2320E*	NU	NJ	NUP	100 (3.9370)	215 (8.4646)	73 (2.8740)	3.0 (0.1182)	3.0 (0.1182)	127.5 (5.0197)
2322E*	NU	NJ	NUP	110 (4.3307)	240 (9.4488)	80 (3.1496)	3.0 (0.1182)	3.0 (0.1182)	143.0 (5.6299)
2324E*	NU	NJ	NUP	120 (4.7244)	260 (10.2362)	86 (3.3858)	3.0 (0.1182)	3.0 (0.1182)	154.0 (6.0630)
2326E*	NU	NJ	NUP	130 (5.1181)	280 (11.0236)	93 (3.6614)	4.0 (0.1575)	4 (0.1575)	167.0 (6.5748)
2328E*	NU	NJ	NUP	140 (5.5118)	300 (11.8110)	102 (4.0157)	4.0 (0.1575)	4.0 (0.1575)	180.0 (7.0866)
2330E*	NU	NJ	NUP	150 (5.9055)	320 (12.5984)	108 (4.2520)	4.0 (0.1575)	4.0 (0.1575)	193.0 (7.5984)
2332E	NU	NJ	NUP	160 (6.2992)	340 (13.3858)	114 (4.4882)	4.0 (0.1575)	4.0 (0.1575)	204.0 (8.0315)
2334E	NU	NJ	NUP	170 (6.6929)	360 (14.1732)	120 (4.7244)	4.0 (0.1575)	4.0 (0.1575)	216.0 (8.5039)
2336E	NU	NJ	NUP	180 (7.0866)	380 (14.9606)	126 (4.9606)	4.0 (0.1575)	4.0 (0.1575)	227.0 (8.9370)
2338E	NU	NJ	NUP	190 (7.4803)	400 (15.7480)	132 (5.1969)	5.0 (0.1969)	5.0 (0.1969)	240.0 (9.4488)
2340E	NU	NJ	NUP	200 (7.8740)	420 (16.5354)	138 (5.4331)	5.0 (0.1969)	5.0 (0.1969)	253.0 (9.9606)

*Indicates NSK (HPS) High Performance Standard bearing.

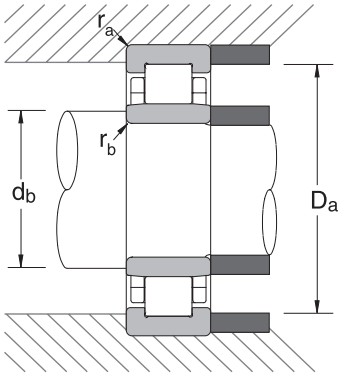

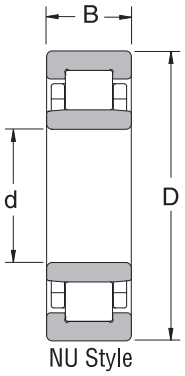

Common Options	
M	Machined Brass Cage
W	Pressed Steel Cage
ET	High Capacity Polyamide Cage
CO*	Normal Internal Clearance
C3	Greater than Normal Internal Clearance
E	Electric Motor Quality

*Not shown in part number

Bearing Number	Basic Load Ratings		Limiting Speeds (RPM)		Abutment and Fillet Dimensions							Bearing Weight (Approx.)
	C_r	C_{0r}			d_b (min)	d_b (max)	d_c (min)	d_d (min)	D_a (max)	r_{a**} (max)	r_{b**} (max)	
	N (lbs)	N (lbs)	Grease	Oil	mm (in)	mm (in)	mm (in)	mm (in)	mm (in)	mm (in)	mm (in)	kg (lbs)
2304E	42000 (9450)	39000 (8700)	11000	14000	24.0 (0.945)	26 (1.024)	30 (1.181)	33 (1.299)	45.5 (1.791)	1.0 (0.039)	0.6 (0.023)	0.209 (0.46)
2305E*	65500 (14700)	56000 (12600)	9000	11000	31.5 (1.240)	32 (1.260)	37 (1.457)	40 (1.575)	55.5 (2.185)	1.0 (0.039)	1.0 (0.039)	0.338 (0.74)
2306E*	86000 (19300)	77500 (17500)	8000	9500	36.5 (1.437)	39 (1.535)	44 (1.732)	48 (1.890)	65.5 (2.579)	1.0 (0.039)	1.0 (0.039)	0.518 (1.14)
2307E*	107000 (24100)	101000 (22600)	6700	8500	41.5 (1.634)	44 (1.732)	48 (1.890)	53 (2.087)	72.0 (2.835)	1.5 (0.059)	1.0 (0.039)	0.711 (1.56)
2308E*	131000 (29500)	122000 (27500)	6000	7500	48.0 (1.890)	50 (1.969)	55 (2.165)	60 (2.362)	82.0 (3.228)	1.5 (0.059)	1.5 (0.059)	0.933 (2.05)
2309E*	158000 (35500)	153000 (34500)	5300	6700	53.0 (2.087)	56 (2.205)	60 (2.362)	66 (2.598)	92.0 (3.622)	1.5 (0.059)	1.5 (0.059)	1.28 (2.82)
2310E*	187000 (42000)	187000 (42000)	5000	6300	59.0 (2.323)	63 (2.480)	67 (2.638)	73 (2.874)	101.0 (3.976)	2.0 (0.078)	2.0 (0.078)	1.7 (3.74)
2311E*	231000 (52000)	233000 (52500)	4500	5600	64.0 (2.520)	68 (2.677)	72 (2.835)	80 (3.150)	111.0 (4.370)	2.0 (0.078)	2.0 (0.078)	2.18 (4.80)
2312E*	251000 (56500)	262000 (59000)	4300	5300	71.0 (2.795)	75 (2.953)	79 (3.110)	86 (3.386)	119.0 (4.685)	2.0 (0.078)	2.0 (0.078)	2.70 (5.94)
2313E*	263000 (59000)	265000 (59500)	3800	4800	76.0 (2.992)	80 (3.150)	85 (3.346)	93 (3.661)	129.0 (5.079)	2.0 (0.078)	2.0 (0.078)	3.16 (6.95)
2314E*	310000 (69500)	325000 (72500)	3600	4500	81.0 (3.189)	86 (3.386)	92 (3.622)	100 (3.937)	139.0 (5.472)	2.0 (0.078)	2.0 (0.078)	3.92 (8.62)
2315E*	370000 (83500)	395000 (88500)	3400	4300	86.0 (3.386)	92 (3.622)	97 (3.819)	106 (4.173)	149.0 (5.866)	2.0 (0.078)	2.0 (0.078)	4.86 (10.7)
2316E*	400000 (90500)	430000 (97000)	3200	4000	91.0 (3.583)	98 (3.858)	105 (4.134)	114 (4.488)	159.0 (6.260)	2.0 (0.078)	2.0 (0.078)	5.73 (12.6)
2317E*	485000 (109000)	485000 (109000)	3000	3800	98.0 (3.858)	105 (4.134)	110 (4.331)	119 (4.685)	167.0 (6.575)	2.5 (0.098)	2.5 (0.098)	6.77 (14.9)
2318E*	535000 (120000)	535000 (120000)	2800	3400	103.0 (4.055)	111 (4.370)	117 (4.606)	127 (5.000)	177.0 (6.969)	2.5 (0.098)	2.5 (0.098)	7.90 (17.4)
2319E*	565000 (127000)	585000 (131000)	2600	3400	108.0 (4.252)	118 (4.646)	124 (4.882)	134 (5.276)	187.0 (7.362)	2.5 (0.098)	2.5 (0.098)	9.21 (20.3)
2320E*	700000 (157000)	715000 (161000)	2400	3000	113.0 (4.449)	124 (4.882)	132 (5.197)	143 (5.630)	202.0 (7.953)	2.5 (0.098)	2.5 (0.098)	11.80 (26.0)
2322E*	830000 (186000)	880000 (197000)	2200	2800	123.0 (4.843)	139 (5.4724)	145 (5.7087)	158 (6.2205)	227 (8.9370)	2.5 (0.098)	2.5 (0.098)	18.8 (41.4)
2324E*	975000 (219000)	1030000 (231000)	2000	2600	133.0 (5.236)	150 (5.906)	156 (6.142)	171 (6.732)	247.0 (9.724)	2.5 (0.098)	2.5 (0.098)	25.0 (55.0)
2326E*	1130000 (254000)	1230000 (277000)	1900	2400	146.0 (5.748)	163 (6.417)	169 (6.654)	184 (7.244)	264.0 (10.394)	3.0 (0.118)	3.0 (0.118)	30.0 (66.0)
2328E*	1250000 (281000)	1380000 (310000)	1700	2200	156.0 (6.142)	176 (6.929)	182 (7.165)	198 (7.795)	284.0 (11.181)	3.0 (0.118)	3.0 (0.118)	37.7 (82.9)
2330E*	1430000 (321000)	1600000 (360000)	1600	2000	166.0 (6.535)	188 (7.402)	195 (7.677)	213 (8.386)	304.0 (11.969)	3.0 (0.118)	3.0 (0.118)	45.1 (99.2)
2332E	1310000 (295000)	1820000 (410000)	1500	1900	176.0 (6.929)	199 (7.835)	211 (8.307)	228 (8.976)	324.0 (12.756)	3.0 (0.118)	3.0 (0.118)	53.9 (119)
2334E	1490000 (335000)	2070000 (465000)	1400	1800	186.0 (7.323)	210 (8.268)	223 (8.780)	241 (9.488)	344.0 (13.543)	3.0 (0.118)	3.0 (0.118)	63.4 (139)
2336E	1560000 (350000)	2220000 (500000)	1300	1700	196.0 (7.717)	222 (8.740)	235 (9.252)	255 (10.039)	364.0 (14.331)	3.0 (0.118)	3.0 (0.118)	74.6 (164)
2338E	1770000 (395000)	2520000 (565000)	1300	1600	210.0 (8.268)	235 (9.252)	248 (9.764)	268 (10.551)	380.0 (14.961)	4.0 (0.157)	4.0 (0.157)	86.2 (190)
2340E	1910000 (430000)	2760000 (620000)	1200	1500	220.0 (8.661)	247 (9.724)	263 (10.354)	283 (11.142)	400.0 (15.748)	4.0 (0.157)	4.0 (0.157)	99.3 (218)

C_r = Dynamic Radial Load Rating C_{0r} = Static Radial Load Rating **Maximum fillet which corner radius of bearing will clear.

NSK JAPAN

SPHERICAL ROLLER BEARINGS

Nomenclature D-1

Interchange D-2

Applications D-2

Internal Clearance D-3

21300 Series D-5

22200 Series D-7

22300 Series D-11

23000 Series D-15

23100 Series D-19

23200 Series D-23

23900 Series D-27

24000 Series D-31

24100 Series D-35

SHAKER SCREEN BEARINGS

- Nomenclature D-39
- Internal Clearance D-39
- Interchange D-40
- 22300/23300 Series D-41

SPHERICAL ROLLER BEARINGS

Material Prefix
TL: Tough and Long Life
HTF: High Tough
STF: Super Tough
WTF: Water Tough
Blank: Standard Materials

TL

Basic Type
213xx: Spherical Roller, Extra Heavy
222xx: Spherical Roller, Heavy
223xx: Spherical Roller, Extra Heavy, Wide
230xx: Spherical Roller, Light
231xx: Spherical Roller, Medium
232xx: Spherical Roller, Heavy, Wide
239xx: Spherical Roller, Extra Light
240xx: Spherical Roller, Light, Wide
241xx: Spherical Roller, Medium, Wide

230

Bore Size
(multiply last two numbers by 5 to get bore in mm)
20: 100 mm **48:** 240 mm
32: 160 mm **96:** 480 mm

500 millimeters and larger written as:
/500: 500 mm **/710:** 710 mm
/630: 630 mm **/1000:** 1000 mm

72

Cage Options
CAM: One Piece Brass, Guide Ring
C,CD: Two Piece Steel, Guide Ring
EA: High Capacity Steel
H: Two Piece Polyamide
M: Two Piece Brass, Integral Guide Flange

CAM

Bore Type
Blank: Cylindrical Bore
K: 1:12 Tapered Bore
K30: 1:30 Tapered Bore

K

Material Code
G: Carburized, inner and outer ring rolling element
G2: Carburized, outer ring only
G3: Carburized, inner ring only
G5: Carburized, inner and outer rings
Blank: Thru Hardened Bearing Steel

G3

Lubrication Features
E3: Holes Only, Outer
E4: Groove & Holes, Outer
E7: Groove & Holes, Outer & Inner
E8: Outer Ring with Tapped Holes in both Faces for Lifting
Blank: No Relubriction Feature

E4

Internal Clearance
C2: Tight
Blank: Normal
C3: Greater than Normal Clearance
C4: Greater than C3 Clearance

C3

Other Features
P52: Outer Ring Accuracy
P53: Inner Ring Accuracy
P55: Both Ring Accuracy
U22: Special Inspection Measure
S11: Inner and Outer Ring Heat Stabilized to 200°C
VE: Vibrating Equipment
W507: S11, E4, W31
W509: S11, E7, W31

P55S11

Please refer to the bearing tables for exact part number options.

INTERCHANGE

Description		Interchange			
		NSK	SKF	TORR/TIMKEN	FAG
Part Number	Extra Light	239xx*	239xx	239xx	239xx
	Light	230xx*	230xx	230xx	230xx
	Light, Wide	240xx*	240xx	240xx	240xx
	Medium	231xx*	231xx	231xx	231xx
	Medium, Wide	241xx*	241xx	241xx	241xx
	Heavy	222xx*	222xx	222xx	222xx
	Heavy, Wide	232xx*	232xx	232xx	232xx
	Extra Heavy	213xx*	213xx	213xx	213xx
	Extra Heavy, Wide	223xx*	223xx	223xx	223xx
Part Number Suffix	Brass Cage, One Piece, Guide Ring	CAM, AM	CA, CACM	YM	M, MB, MA
	Brass Cage, Two Piece, Guide Flange	M	MC	BR	--
	Steel Cage, Two Piece, Guide Ring	C ,CD	CJ, CC	CJ, VJ	BLANK
	High Capacity Steel Cage	EA	--	--	--
	Polyamide Cage, Two Piece	H	--	VCF	TVPB
	Tapered Bore 1:12	K	K	K	K
	Tapered Bore 1:30	K30	K30	K	K30
	Carburized Steel, Complete Bearing	g	ECD	W40	W209
	Carburized Steel, Inner Ring Only	g3	ECB	W40I	W209B
	Lube Groove & Holes Outer Ring	E4	W33	W33	S
	Lube Groove & Holes Outer Ring, and Inner Ring	E7	W513	W33W94	SH40AB
	Outer Ring, Tapped Holes One Face for Lifting	--	W56	W45A	--
	Outer Ring, Tapped Holes Both Face for Lifting + E4 Feature	E8	--	--	--
	Holes Only Outer Ring	E3	W20	W20	SY
	Inner Ring Lube Groove and Holes	E5	W26	W94	H40AB
	No Relube Features	BLANK	BLANK	BLANK	--
	Plugs Provided for Outer Ring Holes	E42	W77	W84	H40
	Combination S11, E4 & W31	W507	W507	W33W4W31	--
	Combination W33, W31	E4U22	W506	W33W31	--
	Combination S11, E7 & W31	W509	W509	W33W94W31	SH40A
	Outer Ring with Extra Close Running Accuracy	P52	C04	C04	T52BN
	Inner Ring with Extra Close Running Accuracy	P53	C02	C02	T52BE
	Inner and Outer Ring with Extra Close Running Accuracy	P55	C08	C08	T52BW
	Special Inspection Measures	W31	W31	W31	--
	Inner Ring and Outer Ring Heat Stabilized to 200°C	S11	S1	--	--
	Tight Clearance	C2	C2	C2	C2
	Normal Clearance	BLANK	BLANK	BLANK	BLANK
	Greater than Normal Clearance	C3	C3	C3	C3
	Greater than C3 Clearance	C4	C4	C4	C4

The competitive manufacturers are provided for a convenient source of unit substitution. They can be considered interchangeable in most instances, but for special applications, please consult NSK Engineering. NSK assumes no liability with respect to errors or omissions.

* Indicates NSK **HPS** High Performance Standard Bearing

APPLICATIONS

Provided below are a few common applications for spherical roller bearings. The spherical roller bearing is designed to handle very heavy loads, even under misalignment or shaft deflection conditions. The spherical shape of the outer ring raceway allows the inner ring to tilt slightly relative to the outer ring without significant loss in bearing life. Spherical roller bearings can also handle axial loading in either direction and heavy shock loads.

› **Continuous Casters (Support Roll, Guide Roll, Pinch Roll, Table Roll)** › **Other Metal Mill Equipment**
› **Shaker Screens and Other Vibratory Equipment** › **Paper Making Equipment (Calender Rolls, Dryer Rolls, Fourdrinier)**
› **Mining Equipment (Drag Lines, Gyratory Crushers, Continuous Miners, Jaw Crushers)** › **Blowers and Fans**
› **Rubber and Plastic Forming Equipment (Extruders, Granulators)** › **Pumps and Compressors (Deep Well, Slurry)**
› **Gears, Drives and Reducers** › **Construction Equipment** › **Oil Field Equipment (Pump Jacks, Compounders, Derricks, Hoists)**
› **Overhead Cranes, Crane Hooks, Hoists** › **Metal Forming Equipment** › **Railroad Generators and Alternators**

SPHERICAL ROLLER BEARINGS
RADIAL INTERNAL CLEARANCES

RADIAL INTERNAL CLEARANCES IN SPHERICAL ROLLER BEARINGS WITH CYLINDRICAL BORES

Units: inch

Nominal Bore Diameter d (mm)		Radial Internal Clearance							
		C2		C0		C3		C4	
over	incl.	low	high	low	high	low	high	low	high
24	30	+.0006	+.0010	+.0010	+.0016	+.0016	+.0022	+.0022	+.0030
30	40	+.0006	+.0012	+.0012	+.0018	+.0018	+.0024	+.0024	+.0031
40	50	+.0008	+.0014	+.0014	+.0022	+.0022	+.0030	+.0030	+.0039
50	65	+.0008	+.0016	+.0016	+.0026	+.0026	+.0035	+.0035	+.0047
65	80	+.0012	+.0020	+.0020	+.0031	+.0031	+.0043	+.0043	+.0057
80	100	+.0014	+.0024	+.0024	+.0039	+.0039	+.0053	+.0053	+.0071
100	120	+.0016	+.0030	+.0030	+.0047	+.0047	+.0063	+.0063	+.0083
120	140	+.0020	+.0037	+.0037	+.0057	+.0057	+.0075	+.0075	+.0094
140	160	+.0024	+.0043	+.0043	+.0067	+.0067	+.0087	+.0087	+.0110
160	180	+.0026	+.0047	+.0047	+.0071	+.0071	+.0094	+.0094	+.0122
180	200	+.0028	+.0051	+.0051	+.0079	+.0079	+.0102	+.0102	+.0134
200	225	+.0031	+.0055	+.0055	+.0087	+.0087	+.0114	+.0114	+.0150
225	250	+.0035	+.0059	+.0059	+.0094	+.0094	+.0126	+.0126	+.0165
250	280	+.0039	+.0067	+.0067	+.0102	+.0102	+.0138	+.0138	+.0181
280	315	+.0043	+.0075	+.0075	+.0110	+.0110	+.0146	+.0146	+.0197
315	355	+.0047	+.0079	+.0079	+.0122	+.0122	+.0161	+.0161	+.0217
355	400	+.0051	+.0087	+.0087	+.0134	+.0134	+.0177	+.0177	+.0236
400	450	+.0055	+.0094	+.0094	+.0146	+.0146	+.0197	+.0197	+.0260
450	500	+.0055	+.0102	+.0102	+.0161	+.0161	+.0217	+.0217	+.0283
500	560	+.0059	+.0110	+.0110	+.0173	+.0173	+.0236	+.0236	+.0307
560	630	+.0067	+.0122	+.0122	+.0189	+.0189	+.0256	+.0256	+.0335
630	710	+.0075	+.0138	+.0138	+.0209	+.0209	+.0276	+.0276	+.0362
710	800	+.0083	+.0154	+.0154	+.0228	+.0228	+.0303	+.0303	+.0398
800	900	+.0091	+.0169	+.0169	+.0256	+.0256	+.0339	+.0339	+.0441
900	1000	+.0102	+.0189	+.0189	+.0280	+.0280	+.0366	+.0366	+.0480

RADIAL INTERNAL CLEARANCES IN SPHERICAL ROLLER BEARINGS WITH TAPERED BORES

Units: inch

Nominal Bore Diameter d (mm)		Radial Internal Clearance							
		C2		C0		C3		C4	
over	incl.	low	high	low	high	low	high	low	high
24	30	+.0008	+.0012	+.0012	+.0016	+.0016	+.0022	+.0022	+.0030
30	40	+.0010	+.0014	+.0014	+.0020	+.0020	+.0026	+.0026	+.0033
40	50	+.0012	+.0018	+.0018	+.0024	+.0024	+.0031	+.0031	+.0039
50	65	+.0016	+.0022	+.0022	+.0030	+.0030	+.0037	+.0037	+.0047
65	80	+.0020	+.0028	+.0028	+.0037	+.0037	+.0047	+.0047	+.0059
80	100	+.0022	+.0031	+.0031	+.0043	+.0043	+.0055	+.0055	+.0071
100	120	+.0026	+.0039	+.0039	+.0053	+.0053	+.0067	+.0067	+.0087
120	140	+.0031	+.0047	+.0047	+.0063	+.0063	+.0079	+.0079	+.0102
140	160	+.0035	+.0051	+.0051	+.0071	+.0071	+.0091	+.0091	+.0118
160	180	+.0039	+.0055	+.0055	+.0079	+.0079	+.0102	+.0102	+.0134
180	200	+.0043	+.0063	+.0063	+.0087	+.0087	+.0114	+.0114	+.0146
200	225	+.0047	+.0071	+.0071	+.0098	+.0098	+.0126	+.0126	+.0161
225	250	+.0055	+.0079	+.0079	+.0106	+.0106	+.0138	+.0138	+.0177
250	280	+.0059	+.0087	+.0087	+.0118	+.0118	+.0154	+.0154	+.0193
280	315	+.0067	+.0094	+.0094	+.0130	+.0130	+.0169	+.0169	+.0213
315	355	+.0075	+.0106	+.0106	+.0142	+.0142	+.0185	+.0185	+.0232
355	400	+.0083	+.0118	+.0118	+.0157	+.0157	+.0205	+.0205	+.0256
400	450	+.0091	+.0130	+.0130	+.0173	+.0173	+.0224	+.0224	+.0283
450	500	+.0102	+.0146	+.0146	+.0193	+.0193	+.0248	+.0248	+.0311
500	560	+.0114	+.0161	+.0161	+.0213	+.0213	+.0268	+.0268	+.0343
560	630	+.0126	+.0181	+.0181	+.0236	+.0236	+.0299	+.0299	+.0386
630	710	+.0138	+.0201	+.0201	+.0264	+.0264	+.0335	+.0335	+.0429
710	800	+.0154	+.0224	+.0224	+.0295	+.0295	+.0378	+.0378	+.0480
800	900	+.0173	+.0252	+.0252	+.0331	+.0331	+.0421	+.0421	+.0539
900	1000	+.0193	+.0280	+.0280	+.0366	+.0366	+.0469	+.0469	+.0598

REDUCTION OF RADIAL CLEARANCE FOR SPHERICAL ROLLER BEARINGS WITH TAPERED BORES

Units: inch

Nominal Bore Diameter (mm)		Radial Internal Clearance (Inch)						Reduction in Radial Clearance		Axial Displacement*			
		CN		C3		C4				Taper 1:12		Taper 1:30	
from	to (incl.)	min	max	min	max	min	max	min	max	min	max	min	max
31	40	0.0014	0.0020	0.0020	0.0026	0.0026	0.0033	0.0010	0.0012	0.016	0.018	-	-
41	50	0.0018	0.0024	0.0024	0.0031	0.0031	0.0039	0.0012	0.0014	0.018	0.022	-	-
51	65	0.0022	0.0030	0.0030	0.0037	0.0037	0.0047	0.0012	0.0014	0.018	0.022	-	-
66	80	0.0028	0.0037	0.0037	0.0047	0.0047	0.0059	0.0016	0.0018	0.024	0.028	-	-
81	100	0.0031	0.0043	0.0043	0.0055	0.0055	0.0071	0.0018	0.0022	0.028	0.034	0.069	0.085
101	120	0.0039	0.0053	0.0053	0.0067	0.0067	0.0087	0.0020	0.0024	0.030	0.035	0.075	0.089
121	140	0.0047	0.0063	0.0063	0.0079	0.0079	0.0102	0.0024	0.0028	0.035	0.043	0.089	0.108
141	160	0.0051	0.0071	0.0071	0.0091	0.0091	0.0118	0.0026	0.0031	0.039	0.051	0.098	0.128
161	180	0.0055	0.0079	0.0079	0.0102	0.0102	0.0134	0.0028	0.0035	0.043	0.055	0.108	0.138
181	200	0.0063	0.0087	0.0087	0.0114	0.0114	0.0146	0.0031	0.0039	0.051	0.063	0.128	0.157
201	225	0.0071	0.0098	0.0098	0.0126	0.0126	0.0161	0.0035	0.0043	0.055	0.067	0.138	0.167
226	250	0.0079	0.0106	0.0106	0.0138	0.0138	0.0177	0.0039	0.0047	0.063	0.075	0.157	0.187
251	280	0.0087	0.0118	0.0118	0.0154	0.0154	0.0193	0.0043	0.0055	0.067	0.087	0.167	0.217
281	315	0.0094	0.0130	0.0130	0.0169	0.0169	0.0213	0.0047	0.0059	0.075	0.095	0.187	0.236
316	355	0.0106	0.0142	0.0142	0.0185	0.0185	0.0232	0.0055	0.0067	0.087	0.106	0.217	0.266
356	400	0.0118	0.0157	0.0157	0.0205	0.0205	0.0256	0.0059	0.0075	0.095	0.118	0.236	0.295
401	450	0.0130	0.0173	0.0173	0.0224	0.0224	0.0283	0.0067	0.0083	0.106	0.130	0.266	0.325
451	500	0.0146	0.0193	0.0193	0.0248	0.0248	0.0311	0.0075	0.0094	0.118	0.146	0.295	0.364
501	560	0.0161	0.0213	0.0213	0.0268	0.0268	0.0343	0.0083	0.0106	0.134	0.169	0.335	0.433
561	630	0.0181	0.0236	0.0236	0.0299	0.0299	0.0386	0.0091	0.0118	0.146	0.189	0.364	0.472
631	710	0.0201	0.0264	0.0264	0.0335	0.0335	0.0429	0.0102	0.0130	0.165	0.209	0.413	0.512
711	800	0.0224	0.0295	0.0295	0.0378	0.0378	0.0480	0.0110	0.0146	0.177	0.232	0.453	0.591
801	900	0.0252	0.0331	0.0331	0.0421	0.0421	0.0539	0.0122	0.0161	0.197	0.260	0.492	0.650
901	1000	0.0280	0.0366	0.0366	0.0469	0.0469	0.0598	0.0134	0.0181	0.217	0.291	0.551	0.728

*Axial displacement values apply only to solid steel shafts or hollow steel shafts where the bore is equal to or less than one-half of the outside diameter. If the material is other than steel, or if thin wall journals are used, please consult NSK.

1:12 Taper applies to Series 213, 222, 223, 230, 231, 232, 233, 238 and 239.
1:30 Taper applies to Series 240, 241 and 242.
For Pe less than 0.13Cr, use the lower half of the reduction range. For heavier loads or Pe greater than 0.13Cr, carburized or TL inner rings should be specified and the upper half of the reduction range can be used.

MOUNTING A BEARING USING RADIAL CLEARANCE REDUCTION

Example: The bearing to be mounted is a 22340CAMKE4C3 [200mm bore (40 x 5) with C3 clearance].

1. Using feeler gauges, the clearance in the bearing measures .0090".

2. From the "Reduction in Radial Clearance" column in the chart, the reduction in clearance is .0031" to .0039". Subtract these numbers from the measured clearance.

Measured Clearance	.0090"	.0090"
Reduction	.0031"	.0039"
Mounted Clearance	.0059"	.0051"

3. Bearing is installed by one of the recommended methods until the clearance in the bearing is within the mounted clearance range. For best results, mount bearing at the middle of the range.

SPHERICAL ROLLER BEARINGS: 21300 SERIES

BORE DIAMETER 20 – 110 MM, 0.7874 – 4.3307 INCH

Bearing Number	Nominal Bearing Dimensions						Preferred Shoulder Diameters									
	d		D		B		r**		da				Da			
							max		min		max		min		max	
	mm	inch	mm	inch	mm	inch	mm	inch	mm	inch	mm	inch	mm	inch	mm	inch
21304CDE4	20	0.7874	52	2.0472	15	0.5906	1.0	0.039	27	1.07	28	1.10	42	1.66	45	1.77
21305CDE4	25	0.9843	62	2.4409	17	0.6693	1.0	0.039	32	1.26	34	1.33	51	2.01	55	2.16
21306CDE4	30	1.1811	72	2.8346	19	0.7480	1.0	0.039	37	1.46	40	1.57	59	2.33	65	2.55
21307CDE4	35	1.3780	80	3.1496	21	0.8268	1.5	0.059	44	1.74	47	1.85	67	2.64	71	2.79
21308EAE4*	40	1.5748	90	3.5433	23	0.9055	1.5	0.059	49	1.93	54	2.12	75	2.96	81	3.18
21309EAE4*	45	1.7717	100	3.9370	25	0.9843	1.5	0.059	54	2.13	65	2.55	89	3.51	91	3.58
21310EAE4*	50	1.9685	110	4.3307	27	1.0630	2.0	0.078	60	2.37	72	2.83	98	3.86	100	3.93
21311EAE4*	55	1.9685	120	4.7244	29	1.1417	2.0	0.078	65	2.56	72	2.83	98	3.86	110	4.33
21312EAE4*	60	2.3622	130	5.1181	31	1.2205	2.0	0.078	72	2.84	87	3.42	117	4.61	118	4.64
21313EAE4*	65	2.5591	140	5.5118	33	1.2992	2.0	0.078	77	3.04	94	3.70	126	4.97	128	5.03
21314EAE4*	70	2.7559	150	5.9055	35	1.3780	2.0	0.078	82	3.23	101	3.97	135	5.32	138	5.43
21315EAE4*	75	2.9528	160	6.2992	37	1.4567	2.0	0.078	87	3.43	101	3.97	134	5.28	148	5.82
21316EAE4*	80	3.1496	170	6.6929	39	1.5354	2.0	0.078	92	3.63	109	4.29	146	5.75	158	6.22
21317EAE4*	85	3.3465	180	7.0866	41	1.6142	2.5	0.098	99	3.90	108	4.25	142	5.60	166	6.53
21318EAE4*	90	3.5433	190	7.4803	43	1.6929	2.5	0.098	104	4.10	115	4.52	152	5.99	176	6.92
21319CAME4*	95	3.7402	200	7.8740	45	1.7717	2.5	0.098	109	4.30	127	5.00	172	6.78	186	7.32
21320CAME4*	100	3.9370	215	8.4646	47	1.8504	2.5	0.098	114	4.49	133	5.23	184	7.25	210	8.26
21322CAME4*	110	4.3307	240	9.4488	50	1.9685	2.5	0.098	124	4.89	139	5.48	206	8.12	226	8.89

*Indicates NSK (HPS) High Performance Standard bearing.
**Maximum fillet which corner radius of bearing will clear.

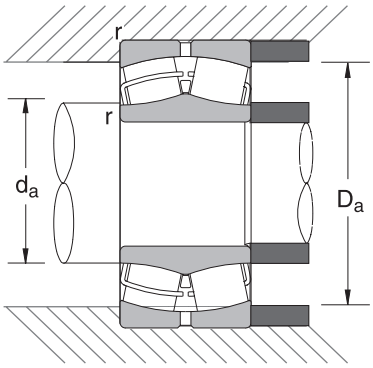

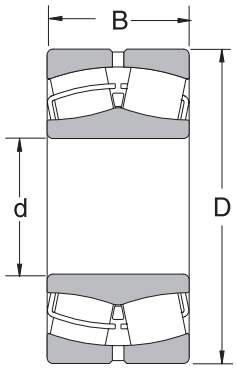

COMMON OPTIONS	
TL	Tough & Long Life
HTF	High Tough
STF	Super Tough
CAM	One Piece Brass Cage
C,CD	Two Piece Steel Cage
EA	High Capacity Steel Cage
H	Two Piece Polyamide Cage
K	1:12 Tapered Bore
G3	Inner Ring Carburized
E4	Lube Groove/Holes, Outer Ring
CO*	Normal Internal Clearance
C2	Tight Internal Clearance
C3	Greater than Normal Internal Clearance
P55	High Running Accuracy Both Rings
S11	Heat Stabilized to 200°C
VE	Vibrating Equipment

*Not shown in part number
See page D-1 for additional options.

Bearing Number	Basic Load Ratings				Limiting Speeds (RPM)		Bearing Weight (Approx.)	
	C_r		C_{or}					
	N	lbs	N	lbs	Grease	Oil	kg	lbs
21304CDE4	29300	6600	26900	6050	6300	8200	0.17	0.37
21305CDE4	43000	9650	40500	9150	5300	6700	0.26	0.57
21306CDE4	55000	12300	54000	12200	4500	6000	0.39	0.86
21307CDE4	71500	16000	76000	17100	4000	5300	0.53	1.17
21308EAE4*	118000	26500	111000	25000	6000	7500	0.73	1.61
21309EAE4*	149000	33500	144000	32500	5000	6300	0.96	2.12
21310EAE4*	178000	40000	174000	39000	4500	5600	1.21	2.67
21311EAE4*	178000	40000	174000	39000	4500	5600	1.58	3.48
21312EAE4*	238000	53500	244000	55000	3800	4800	1.98	4.37
21313EAE4*	264000	59500	275000	61500	3600	4500	2.45	5.40
21314EAE4*	310000	70000	325000	73500	3200	4000	3.00	6.61
21315EAE4*	310000	70000	325000	73500	3200	4000	3.64	8.02
21316EAE4*	355000	80000	375000	84000	3000	3800	4.32	9.52
21317EAE4*	360000	81000	395000	88500	3000	4000	5.20	11.5
21318EAE4*	415000	93000	450000	101000	2800	3600	6.10	13.4
21319CAME4*	430000	96600	435000	98000	1500	2000	6.92	15.3
21320CAME4*	495000	111000	485000	109000	1400	1900	8.46	18.7
21322CAME4*	565000	127000	545000	123000	1300	1700	11.20	24.7

C_r = Dynamic Radial Load Rating C_{or} = Static Radial Load Rating
*Indicates NSK (HPS) High Performance Standard bearing.

SPHERICAL ROLLER BEARINGS: 22200 SERIES

BORE DIAMETER 30 – 90 MM, 1.1811 – 3.5433 INCH

Bearing Number	Nominal Bearing Dimensions						Preferred Shoulder Diameters									
	d		D		B		r**		da				Da			
							max		min		max		min		max	
	mm	inch	mm	inch	mm	inch	mm	inch	mm	inch	mm	inch	mm	inch	mm	inch
22206CE4	30	1.1811	62	2.4409	20	0.7874	1.0	0.039	36	1.42	37	1.45	54	2.11	56	2.20
22207CE4	35	1.3780	72	2.8346	23	0.9055	1.0	0.039	42	1.65	43	1.69	62	2.46	65	2.56
22208EAE4*	40	1.5748	80	3.1496	23	0.9055	1.0	0.039	47	1.85	50	1.95	69	2.71	73	2.87
22209EAE4*	45	1.7717	85	3.3465	23	0.9055	1.0	0.039	52	2.05	55	2.15	74	2.92	78	3.07
22210EAE4*	50	1.9685	90	3.5433	23	0.9055	1.0	0.039	57	2.24	60	2.37	80	3.14	83	3.27
22210CAME4	50	1.9685	90	3.5433	23	0.9055	1.0	0.039	57	2.24	59	2.33	79	3.12	83	3.27
22211EAE4*	55	2.1654	100	3.9370	25	0.9843	1.5	0.059	64	2.52	66	2.59	88	3.47	91	3.58
22211CAME4	55	2.1654	100	3.9370	25	0.9843	1.5	0.059	64	2.52	66	2.60	88	3.47	91	3.58
22212EAE4*	60	2.3622	110	4.3307	28	1.1024	1.5	0.059	69	2.72	73	2.87	97	3.83	101	3.98
22212CAME4	60	2.3622	110	4.3307	28	1.1024	1.5	0.059	69	2.72	73	2.86	97	3.81	101	3.98
22213EAE4*	65	2.5590	120	4.7244	31	1.2204	1.5	0.059	74	2.91	80	3.15	107	4.21	111	4.37
22213CAME4	65	2.5591	120	4.7244	31	1.2205	1.5	0.059	74	2.91	79	3.12	105	4.14	111	4.37
22214EAE4*	70	2.7559	125	4.9213	31	1.2205	1.5	0.059	79	3.11	84	3.30	110	4.35	116	4.57
22214CAME4	70	2.7559	125	4.9213	31	1.2205	1.5	0.059	79	3.11	83	3.28	110	4.35	116	4.57
22215EAE4*	75	2.9528	130	5.1181	31	1.2205	1.5	0.059	84	3.31	88	3.46	116	4.57	121	4.76
22215CAME4	75	2.9528	130	5.1181	31	1.2205	1.5	0.059	84	3.31	89	3.52	116	4.55	121	4.76
22216EAE4*	80	3.1496	140	5.5118	33	1.2992	2.0	0.078	90	3.54	95	3.73	125	4.91	130	5.12
22216CAME4	80	3.1496	140	5.5118	33	1.2992	2.0	0.078	90	3.54	94	3.72	123	4.86	130	5.12
22217EAE4*	85	3.3465	150	5.9055	36	1.4173	2.0	0.078	95	3.74	101	3.99	134	5.27	140	5.51
22217CAME4	85	3.3465	150	5.9055	36	1.4173	2.0	0.078	95	3.74	101	3.98	133	5.24	140	5.51
22218EAE4*	90	3.5433	160	6.2992	40	1.5748	2.0	0.078	100	3.94	108	4.25	141	5.57	150	5.91
22218CAME4	90	3.5433	160	6.2992	40	1.5748	2.0	0.078	100	3.94	108	4.24	141	5.56	150	5.91

*Indicates NSK (HPS) High Performance Standard bearing.
**Maximum fillet which corner radius of bearing will clear.

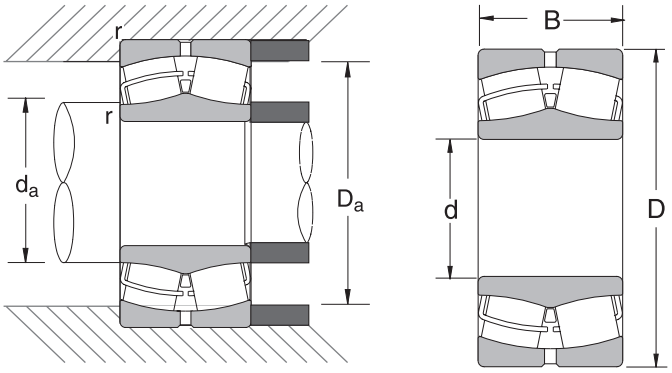

COMMON OPTIONS	
TL	Tough & Long Life
HTF	High Tough
STF	Super Tough
CAM	One Piece Brass Cage
C,CD	Two Piece Steel Cage
EA	High Capacity Steel Cage
H	Two Piece Polyamide Cage
K	1:12 Tapered Bore
G3	Inner Ring Carburized
E4	Lube Groove/Holes, Outer Ring
CO*	Normal Internal Clearance
C2	Tight Internal Clearance
C3	Greater than Normal Internal Clearance
P55	High Running Accuracy Both Rings
S11	Heat Stabilized to 200°C
VE	Vibrating Equipment

*Not shown in part number
See page D-1 for additional options.

Bearing Number	Basic Load Ratings				Limiting Speeds (RPM)		Bearing Weight (Approx.)	
	C_r		C_{or}					
	N	lbs	N	lbs	Grease	Oil	kg	lbs
22206CE4	50000	11300	50000	11200	6000	7500	0.27	0.60
22207CE4	69000	15500	71000	15900	5300	6700	0.42	0.93
22208EAE4*	113000	249000	99500	22300	5600	7100	0.50	1.10
22209EAE4*	118000	26500	111000	25000	6000	7500	0.55	1.21
22210EAE4*	124000	27800	119000	26700	5600	7100	0.61	1.34
22210CAME4	82000	18500	93000	20900	4000	5000	0.58	1.28
22211EAE4*	149000	33500	144000	32500	5300	6700	0.81	1.79
22211CAME4	104000	23400	123000	27600	3600	4500	0.82	1.81
22212EAE4*	178000	40000	174000	39000	4800	6000	1.10	2.43
22212CAME4	127000	28500	154000	34500	3200	4000	1.12	2.47
22213EAE4*	221000	49500	230000	52000	4300	5300	1.51	3.33
22213CAME4	152000	34000	190000	42500	3000	3800	1.51	3.33
22214EAE4*	225000	50500	232000	52000	4000	5300	1.58	3.48
22214CAME4	163000	36500	205000	46000	2800	3600	1.58	3.48
22215EAE4*	238000	53500	244000	55000	4000	5000	1.64	3.62
22215CAME4	162000	36500	212000	47500	2800	3400	1.69	3.73
22216EAE4*	264000	59500	275000	61500	3600	4500	2.01	4.43
22216CAME4	181000	41000	232000	52000	2600	3200	2.03	4.48
22217EAE4*	310000	70000	325000	73500	3400	4300	2.54	5.60
22217CAME4	215000	48500	276000	62000	2400	3000	2.55	5.62
22218EAE4*	360000	81000	395000	88500	3200	4000	3.30	7.28
22218CAME4	256000	57500	340000	76500	2200	2800	3.32	7.32

C_r = Dynamic Radial Load Rating C_{or} = Static Radial Load Rating
*Indicates NSK (HPS) High Performance Standard bearing.

SPHERICAL ROLLER BEARINGS: 22200 SERIES (CONT.)

BORE DIAMETER 95 – 320 MM, 3.7402 – 12.5984 INCH

Bearing Number	Nominal Bearing Dimensions						Preferred Shoulder Diameters									
	d		D		B		r**		da				Da			
							max		min		max		min		max	
	mm	inch	mm	inch	mm	inch	mm	inch	mm	inch	mm	inch	mm	inch	mm	inch
22219EAE4*	95	3.7402	170	6.6929	43	1.6929	2.0	0.078	107	4.21	115	4.52	151	5.95	158	6.22
22219CAME4	95	3.7402	170	6.6929	43	1.6929	2.0	0.078	107	4.21	114	4.47	150	5.90	158	6.22
22220EAE4*	100	3.9370	180	7.0866	46	1.8110	2.0	0.078	112	4.41	120	4.71	159	6.25	168	6.61
22220CAME4	100	3.9370	180	7.0866	46	1.8110	2.0	0.078	112	4.41	121	4.75	158	6.24	168	6.61
22222EAE4*	110	4.3307	200	7.8740	53	2.0866	2.0	0.078	122	4.80	130	5.11	177	6.95	188	7.40
22222CAME4	110	4.3307	200	7.8740	53	2.0866	2.0	0.078	122	4.80	134	5.26	176	6.91	188	7.40
22224EAE4*	120	4.7244	215	8.4646	58	2.2835	2.0	0.078	132	5.20	142	5.60	189	7.46	203	7.99
22224CAME4	120	4.7244	215	8.4646	58	2.2835	2.0	0.078	132	5.20	144	5.65	188	7.42	203	7.99
22226EAE4*	130	5.1181	230	9.0551	64	2.5197	2.5	0.098	144	5.67	153	6.02	203	8.00	216	8.50
22226CAME4	130	5.1181	230	9.0551	64	2.5197	2.5	0.098	144	5.67	156	6.14	203	7.99	216	8.50
22228CDE4	140	5.5118	250	9.8425	68	2.6772	2.5	0.098	154	6.06	167	6.59	219	8.61	236	9.29
22228CAME4*	140	5.5118	250	9.8425	68	2.6772	2.5	0.098	154	6.06	166	6.55	221	8.69	236	9.29
22230CDE4	150	5.9055	270	10.6299	73	2.8740	2.5	0.098	164	6.46	180	7.07	236	9.28	256	10.08
22230CAME4*	150	5.9055	270	10.6299	73	2.8740	2.5	0.098	164	6.46	180	7.08	236	9.28	256	10.08
22232CDE4	160	6.2992	290	11.4173	80	3.1496	2.5	0.098	174	6.85	191	7.51	255	10.02	276	10.87
22232CAME4*	160	6.2992	290	11.4173	80	3.1496	2.5	0.098	174	6.85	191	7.53	255	10.02	276	10.87
22234CDE4	170	6.6929	310	12.2047	86	3.3858	3.0	0.118	188	7.40	206	8.12	270	10.62	292	11.50
22234CAME4*	170	6.6929	310	12.2047	86	3.3858	3.0	0.118	188	7.40	207	8.14	270	10.62	292	11.50
22236CDE4	180	7.0866	320	12.5984	86	3.3858	3.0	0.118	198	7.80	213	8.37	278	10.95	302	11.89
22236CAME4*	180	7.0866	320	12.5984	86	3.3858	3.0	0.118	198	7.80	213	8.39	278	10.95	302	11.89
22238CAME4*	190	7.4803	340	13.3858	92	3.6220	3.0	0.118	208	8.19	226	8.91	295	11.63	322	12.68
22240CAME4*	200	7.8740	360	14.1732	98	3.8583	3.0	0.118	218	8.58	241	9.47	314	12.37	342	13.46
22244CAME4*	220	8.6614	400	15.7480	108	4.2520	3.0	0.118	238	9.37	264	10.41	348	13.69	382	15.04
22248CAME4*	240	9.4488	440	17.3228	120	4.7244	3.0	0.118	258	10.16	289	11.39	383	15.07	422	16.61
22252CAME4*	260	10.2362	480	18.8976	130	5.1181	4.0	0.157	282	11.10	315	12.39	418	16.45	458	18.03
22256CAME4*	280	11.0236	500	19.6850	130	5.1181	4.0	0.157	302	11.89	336	13.21	438	17.26	478	18.82
22260CAME4*	300	11.8110	540	21.2598	140	5.5118	4.0	0.157	322	12.68	363	14.28	473	18.63	518	20.39
22264CAME4*	320	12.5984	580	22.8346	150	5.9055	4.0	0.157	342	13.46	387	15.25	508	19.99	558	21.97

*Indicates NSK (HPS) High Performance Standard bearing.

**Maximum fillet which corner radius of bearing will clear.

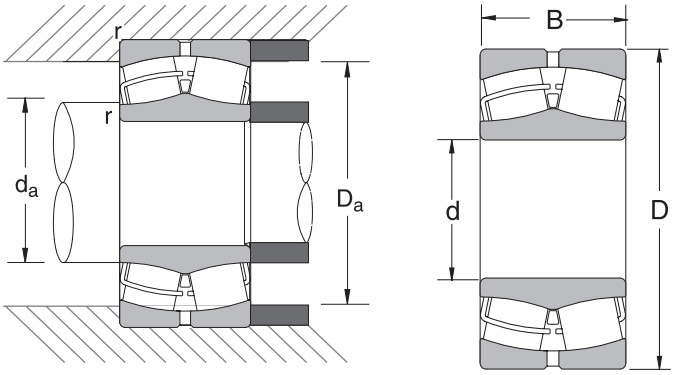

COMMON OPTIONS	
TL	Tough & Long Life
HTF	High Tough
STF	Super Tough
CAM	One Piece Brass Cage
C,CD	Two Piece Steel Cage
EA	High Capacity Steel Cage
H	Two Piece Polyamide Cage
K	1:12 Tapered Bore
G3	Inner Ring Carburized
E4	Lube Groove/Holes, Outer Ring
CO*	Normal Internal Clearance
C2	Tight Internal Clearance
C3	Greater than Normal Internal Clearance
P55	High Running Accuracy Both Rings
S11	Heat Stabilized to 200°C
VE	Vibrating Equipment

*Not shown in part number
See page D-1 for additional options.

Bearing Number	Basic Load Ratings				Limiting Speeds (RPM)		Bearing Weight (Approx.)	
	C_r		C_{or}					
	N	lbs	N	lbs	Grease	Oil	kg	lbs
22219EAE4*	415000	93000	450000	101000	3000	3800	4.04	8.91
22219CAME4	296000	66500	395000	88500	2000	2600	3.99	8.80
22220EAE4*	455000	102000	490000	110000	2800	3600	4.84	10.7
22220CAME4	330000	74000	440000	99000	2000	2400	4.91	10.8
22222EAE4*	605000	136000	645000	145000	2800	3600	6.99	15.4
22222CAME4	425000	95500	585000	132000	1800	2200	7.07	15.6
22224EAE4*	685000	154000	765000	172000	2400	3000	8.80	19.4
22224CAME4	490000	110000	690000	155000	1600	2000	8.83	19.5
22226EAE4*	820000	184000	940000	211000	2200	2600	11.0	24.3
22226CAME4	565000	127000	815000	183000	1500	1900	10.9	24.0
22228CDE4	645000	145000	930000	209000	1400	1700	14.5	32.0
22228CAME4*	835000	188000	945000	213000	1400	1700	13.8	30.4
22230CDE4	765000	172000	1120000	252000	1300	1600	18.4	40.6
22230CAME4*	955000	215000	1120000	252000	1300	1600	18.0	39.7
22232CDE4	910000	205000	1320000	297000	1200	1500	23.1	50.9
22232CAME4*	1140000	256000	1320000	297000	1200	1500	22.4	49.4
22234CDE4	990000	223000	1500000	335000	1100	1400	28.8	63.5
22234CAME4*	1240000	279000	1500000	335000	1100	1400	27.9	61.5
22236CDE4	1020000	230000	1540000	345000	1100	1300	30.2	66.6
22236CAME4*	1280000	288000	1540000	345000	1100	1300	29.1	64.2
22238CAME4*	1420000	320000	1730000	390000	1000	1200	35.5	78.3
22240CAME4*	1620000	365000	2010000	450000	950	1200	42.6	93.9
22244CAME4*	1960000	440000	2430000	545000	850	1000	59.0	130
22248CAME4*	2340000	520000	2890000	650000	750	950	80.2	177
22252CAME4*	2720000	611000	3400000	760000	670	850	104	229
22256CAME4*	2850000	640000	3650000	820000	630	800	110	243
22260CAME4*	3250000	730000	4250000	950000	600	750	139	306
22264CAME4*	3750000	842000	4850000	1100000	530	670	174	384

C_r = Dynamic Radial Load Rating C_{or} = Static Radial Load Rating
*Indicates NSK (HPS) High Performance Standard bearing.

SPHERICAL ROLLER BEARINGS: 22300 SERIES

BORE DIAMETER 40 - 95 MM, 1.5748 - 3.7402 INCH

Bearing Number	Nominal Bearing Dimensions						Preferred Shoulder Diameters									
	d		D		B		r**		da				Da			
							max		min		max		min		max	
	mm	inch	mm	inch	mm	inch	mm	inch	mm	inch	mm	inch	mm	inch	mm	inch
22308EAE4*	40	1.5748	90	3.5433	33	1.2992	1.5	0.059	49	1.93	50	1.95	75	2.96	81	3.19
22308CAME4	40	1.5748	90	3.5433	33	1.2992	1.5	0.059	49	1.93	50	1.96	75	2.96	81	3.19
22309EAE4*	45	1.7717	100	3.9370	36	1.4173	1.5	0.059	54	2.13	58	2.28	85	3.33	91	3.58
22309CAME4	45	1.7717	100	3.9370	36	1.4173	1.5	0.059	54	2.13	58	2.30	85	3.33	91	3.58
22310EAE4*	50	1.9685	110	4.3307	40	1.5748	2.0	0.078	60	2.36	65	2.55	92	3.62	100	3.94
22310CAME4	50	1.9685	110	4.3307	40	1.5748	2.0	0.078	60	2.36	62	2.46	92	3.63	100	3.94
22311EAE4*	55	2.1654	120	4.7244	43	1.6929	2.0	0.078	65	2.56	73	2.88	101	3.99	110	4.33
22311CAME4	55	2.1654	120	4.7244	43	1.6929	2.0	0.078	65	2.56	70	2.74	101	3.97	110	4.33
22312EAE4*	60	2.3622	130	5.1181	46	1.8110	2.0	0.078	72	2.83	79	3.11	110	4.32	118	4.65
22312CAME4	60	2.3622	130	5.1181	46	1.8110	2.0	0.078	72	2.83	75	2.97	109	4.30	118	4.65
22313EAE4*	65	2.5591	140	5.5118	48	1.8898	2.0	0.078	77	3.03	85	3.33	118	4.64	128	5.04
22313CAME4	65	2.5591	140	5.5118	48	1.8898	2.0	0.078	77	3.03	82	3.24	117	4.61	128	5.04
22314EAE4*	70	2.7559	150	5.9055	51	2.0079	2.0	0.078	82	3.23	91	3.59	127	5.01	138	5.43
22314CAME4	70	2.7559	150	5.9055	51	2.0079	2.0	0.078	82	3.23	88	3.48	126	4.96	138	5.43
22315EAE4*	75	2.9528	160	6.2992	55	2.1654	2.0	0.078	87	3.43	97	3.83	135	5.33	148	5.83
22315CAME4	75	2.9528	160	6.2992	55	2.1654	2.0	0.078	87	3.43	94	3.71	134	5.29	148	5.83
22316EAE4*	80	3.1496	170	6.6929	58	2.2835	2.0	0.078	92	3.62	103	4.07	144	5.66	158	6.22
22316CAME4	80	3.1496	170	6.6929	58	2.2835	2.0	0.078	92	3.62	100	3.94	143	5.64	158	6.22
22317EAE4*	85	3.3465	180	7.0866	60	2.3622	2.5	0.098	99	3.90	110	4.34	154	6.06	166	6.54
22317CAME4	85	3.3465	180	7.0866	60	2.3622	2.5	0.098	99	3.90	107	4.22	153	6.03	166	6.54
22318EAE4*	90	3.5433	190	7.4803	64	2.5197	2.5	0.098	104	4.09	116	4.56	162	6.38	176	6.93
22318CAME4	90	3.5433	190	7.4803	64	2.5197	2.5	0.098	104	4.09	110	4.34	159	6.27	176	6.93
22319EAE4*	95	3.7402	200	7.8740	67	2.6378	2.5	0.098	109	4.29	121	4.78	171	6.72	186	7.32
22319CAME4	95	3.7402	200	7.8740	67	2.6378	2.5	0.098	109	4.29	119	4.70	169	6.66	186	7.32

*Indicates NSK (HPS) High Performance Standard bearing.

**Maximum fillet which corner radius of bearing will clear.

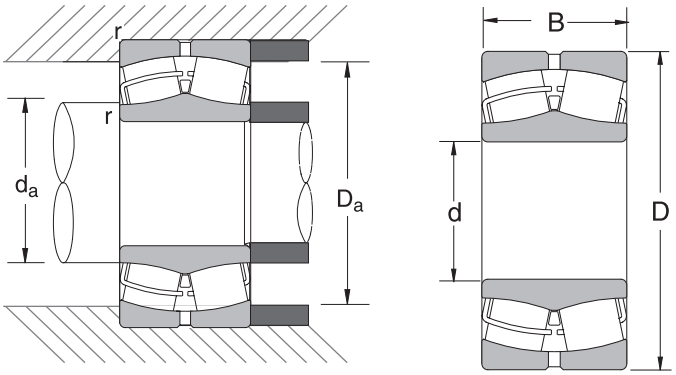

COMMON OPTIONS	
TL	Tough & Long Life
HTF	High Tough
STF	Super Tough
CAM	One Piece Brass Cage
C,CD	Two Piece Steel Cage
EA	High Capacity Steel Cage
H	Two Piece Polyamide Cage
K	1:12 Tapered Bore
G3	Inner Ring Carburized
E4	Lube Groove/Holes, Outer Ring
CO*	Normal Internal Clearance
C2	Tight Internal Clearance
C3	Greater than Normal Internal Clearance
P55	High Running Accuracy Both Rings
S11	Heat Stabilized to 200°C
VE	Vibrating Equipment

*Not shown in part number
See page D-1 for additional options.

Bearing Number	Basic Load Ratings				Limiting Speeds (RPM)		Bearing Weight (Approx.)	
	C_r		C_{or}					
	N	lbs	N	lbs	Grease	Oil	kg	lbs
22308EAE4*	170000	38000	153000	34500	5300	6700	0.98	2.16
22308CAME4	122000	27400	129000	29100	4300	5300	0.98	2.16
22309EAE4*	107000	46500	195000	44000	4500	5600	1.34	2.95
22309CAME4	148000	33000	167000	37500	3800	4800	1.35	2.98
22310EAE4*	246000	55500	234000	52500	4300	5300	1.78	3.92
22310CAME4	186000	41500	211000	47500	3600	4300	1.76	3.88
22311EAE4*	292000	65500	292000	65500	3800	4800	2.30	5.07
22311CAME4	209000	47000	241000	54500	3200	4000	2.24	4.94
22312EAE4*	340000	76000	340000	77000	3600	4500	2.89	6.37
22312CAME4	246000	55500	288000	65000	3000	3600	2.85	6.28
22313EAE4*	375000	84000	380000	85500	3200	4000	3.52	7.76
22313CAME4	265000	59500	315000	71500	2800	3400	3.44	7.58
22314EAE4*	425000	95500	435000	97500	3000	3800	4.28	9.44
22314CAME4	305000	69000	370000	83500	2600	3200	4.19	9.24
22315EAE4*	485000	109000	505000	113000	2800	3600	5.26	11.6
22315CAME4	340000	76500	415000	93000	2400	3000	5.13	11.3
22316EAE4*	540000	122000	565000	128000	2600	3400	6.23	13.7
22316CAME4	390000	87500	480000	107000	2200	2800	6.11	13.5
22317EAE4*	600000	134000	630000	141000	2400	3200	7.23	15.9
22317CAME4	415000	93500	510000	114000	2000	2600	7.05	15.5
22318EAE4*	665000	150000	705000	158000	2400	3000	8.56	18.9
22318CAME4	485000	109000	595000	134000	2000	2400	8.39	18.5
22319EAE4*	735000	165000	780000	175000	2200	2800	9.91	21.8
22319CAME4	525000	118000	675000	151000	1900	2400	9.90	21.8

C_r = Dynamic Radial Load Rating C_{or} = Static Radial Load Rating
*Indicates NSK (HPS) High Performance Standard bearing.

SPHERICAL ROLLER BEARINGS: 22300 SERIES (CONT.)

BORE DIAMETER 100 - 320 MM, 3.9370 – 12.5984 INCH

Bearing Number	Nominal Bearing Dimensions						Preferred Shoulder Diameters									
	d		D		B		r**		da				Da			
							max		min		max		min		max	
	mm	inch	mm	inch	mm	inch	mm	inch	mm	inch	mm	inch	mm	inch	mm	inch
22320EAE4*	100	3.9370	215	8.4646	73	2.8740	2.5	0.098	114	4.49	130	5.12	183	7.20	201	7.91
22320CAME4*	100	3.9370	215	8.4646	73	2.8740	2.5	0.098	114	4.49	130	5.11	183	7.19	201	7.91
22322EAE4*	110	4.3307	240	9.4488	80	3.1496	2.5	0.098	124	4.88	146	5.74	204	8.04	226	8.90
22322CAME4*	110	4.3307	240	9.4488	80	3.1496	2.5	0.098	124	4.88	144	5.65	202	7.96	226	8.90
22324EAE4*	120	4.7244	260	10.2362	86	3.3858	2.5	0.098	134	5.28	157	6.20	221	8.70	246	9.69
22324CAME4*	120	4.7244	260	10.2362	86	3.3858	2.5	0.098	134	5.28	155	6.09	219	8.61	246	9.69
22326CE4	130	5.1181	280	11.0236	93	3.6614	3.0	0.118	148	5.83	166	6.54	236	9.28	262	10.31
22326CAME4*	130	5.1181	280	11.0236	93	3.6614	3.0	0.118	148	5.83	167	6.57	236	9.28	262	10.31
22328CE4	140	5.5118	300	11.8110	102	4.0157	3.0	0.118	158	6.22	178	7.00	252	9.94	282	11.10
22328CAME4*	140	5.5118	300	11.8110	102	4.0157	3.0	0.118	158	6.22	179	7.03	252	9.94	282	11.10
22330CAME4*	150	5.9055	320	12.5984	108	4.2520	3.0	0.118	168	6.61	192	7.56	269	10.61	302	11.89
22332CAME4*	160	6.2992	340	13.3858	114	4.4882	3.0	0.118	178	7.01	204	8.05	287	11.28	322	12.68
22334CAME4*	170	6.6929	360	14.1732	120	4.7244	3.0	0.118	188	7.40	208	8.20	304	11.95	342	13.46
22336CAME4*	180	7.0866	380	14.9606	126	4.9606	3.0	0.118	198	7.80	221	8.69	322	12.66	362	14.25
22338CAME4*	190	7.4803	400	15.7480	132	5.1969	4.0	0.157	212	8.35	233	9.17	338	13.30	378	14.88
22340CAME4	200	7.8740	420	16.5354	138	5.4331	4.0	0.157	222	8.74	257	10.12	352	13.85	398	15.67
22344CAME4	220	8.6614	460	18.1102	145	5.7087	4.0	0.157	242	9.53	277	10.90	391	15.38	438	17.24
22348CAME4	240	9.4488	500	19.6850	155	6.1024	4.0	0.157	262	10.31	303	11.91	422	16.63	478	18.82
22352CAME4	260	10.2362	540	21.2598	165	6.4961	5.0	0.196	288	11.34	327	12.89	462	18.17	512	20.16
22356CAME4	280	11.0236	580	22.8346	175	6.8898	5.0	0.196	308	12.13	353	13.88	496	19.53	552	21.73
22360CAME4	300	11.8110	620	24.4094	185	7.2835	6.0	0.236	336	13.23	377	14.85	533	20.97	584	22.99
22364CAME4	320	12.5984	670	26.3780	200	7.8740	6.0	0.236	356	14.02	407	16.01	574	22.59	634	24.96

*Indicates NSK (HPS) High Performance Standard bearing.

**Maximum fillet which corner radius of bearing will clear.

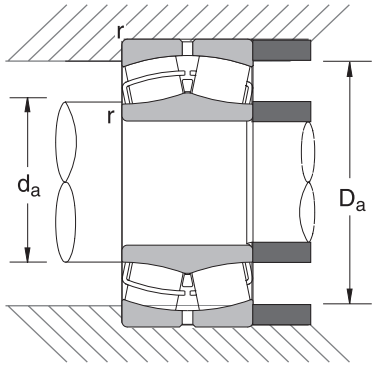

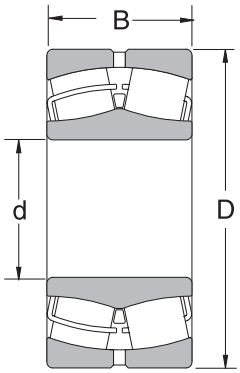

COMMON OPTIONS	
TL	Tough & Long Life
HTF	High Tough
STF	Super Tough
CAM	One Piece Brass Cage
C,CD	Two Piece Steel Cage
EA	High Capacity Steel Cage
H	Two Piece Polyamide Cage
K	1:12 Tapered Bore
G3	Inner Ring Carburized
E4	Lube Groove/Holes, Outer Ring
CO*	Normal Internal Clearance
C2	Tight Internal Clearance
C3	Greater than Normal Internal Clearance
P55	High Running Accuracy Both Rings
S11	Heat Stabilized to 200°C
VE	Vibrating Equipment

*Not shown in part number
See page D-1 for additional options.

Bearing Number	Basic Load Ratings				Limiting Speeds (RPM)		Bearing Weight (Approx.)	
	C_r		C_{or}					
	N	lbs	N	lbs	Grease	Oil	kg	lbs
22320EAE4*	860000	194000	930000	209000	2000	2600	12.7	28.0
22320CAME4*	750000	168000	785000	176000	1700	2200	12.5	27.6
22322EAE4*	1030000	231000	1120000	253000	1900	2400	17.6	38.8
22322CAME4*	925000	208000	980000	221000	1600	1900	17.5	38.6
22324EAE4*	1190000	268000	1320000	296000	1700	2200	22.2	48.9
22324CAME4*	1060000	238000	1120000	252000	1400	1800	22.0	48.5
22326CE4	995000	223000	1350000	305000	1300	1600	28.1	61.9
22326CAME4*	1240000	279000	1350000	305000	1300	1600	27.6	60.8
22328CE4	1160000	260000	1590000	360000	1200	1500	35.4	78.0
22328CAME4*	1450000	325000	1590000	360000	1200	1500	34.4	75.8
22330CAME4*	1530000	345000	1690000	380000	1100	1400	41.5	91.5
22332CAME4*	1700000	385000	1900000	425000	1100	1300	49.3	109
22334CAME4*	1970000	445000	2110000	475000	1000	1200	57.9	128
22336CAME4*	2170000	490000	2340000	525000	950	1200	67.0	148
22338CAME4*	2370000	530000	2590000	580000	900	1100	77.6	171
22340CAME4*	2500000	560000	2990000	670000	850	1000	92.6	204
22344CAME4*	2940000	660000	3400000	760000	750	950	116	256
22348CAME4*	3250000	730000	3800000	855000	670	850	147	324
22352CAME4*	3900000	876000	4600000	1030000	630	800	180	397
22356CAME4*	4350000	977000	5150000	1160000	560	710	221	487
22360CAME4	3950000	885000	5900000	1320000	530	670	262	578
22364CAME4	4550000	1020000	6850000	1540000	480	600	338	745

C_r = Dynamic Radial Load Rating C_{or} = Static Radial Load Rating

*Indicates NSK (HPS) High Performance Standard bearing.

SPHERICAL ROLLER BEARINGS: 23000 SERIES

BORE DIAMETER 100 - 480 MM, 3.9370 – 18.8976 INCH

Bearing Number	Nominal Bearing Dimensions						Preferred Shoulder Diameters									
	d		D		B		r**		da				Da			
							max		min		max		min		max	
	mm	inch	mm	inch	mm	inch	mm	inch	mm	inch	mm	inch	mm	inch	mm	inch
23020CDE4	100	3.9370	150	5.9055	37	1.4567	1.5	0.059	109	4.29	112	4.42	136	5.34	141	5.55
23022CDE4	110	4.3307	170	6.6929	45	1.7717	2.0	0.078	120	4.72	124	4.90	152	5.99	160	6.30
23022CAME4	110	4.3307	170	6.6929	45	1.7717	2.0	0.078	120	4.72	124	4.90	152	5.99	160	6.30
23024CDE4	120	4.7244	180	7.0866	46	1.8110	2.0	0.078	130	5.12	135	5.30	162	6.39	170	6.69
23024CAME4*	120	4.7244	180	7.0866	46	1.8110	2.0	0.078	130	5.12	135	5.30	162	6.39	170	6.69
23026CDE4	130	5.1181	200	7.8740	52	2.0472	2.0	0.078	140	5.51	147	5.78	179	7.06	190	7.48
23026CAME4*	130	5.1181	200	7.8740	52	2.0472	2.0	0.078	140	5.51	147	5.79	179	7.06	190	7.48
23028CDE4	140	5.5118	210	8.2677	53	2.0866	2.0	0.078	150	5.91	157	6.18	189	7.46	200	7.87
23028CAME4*	140	5.5118	210	8.2677	53	2.0866	2.0	0.078	150	5.91	157	6.18	189	7.46	200	7.87
23030CDE4	150	5.9055	225	8.8583	56	2.2047	2.0	0.078	162	6.38	169	6.65	203	8.00	213	8.39
23030CAME4*	150	5.9055	225	8.8583	56	2.2047	2.0	0.078	162	6.38	169	6.65	203	8.00	213	8.39
23032CDE4	160	6.2992	240	9.4488	60	2.3622	2.0	0.078	172	6.77	179	7.06	216	8.49	228	8.98
23032CAME4*	160	6.2992	240	9.4488	60	2.3622	2.0	0.078	172	6.77	180	7.07	216	8.49	228	8.98
23034CDE4	170	6.6929	260	10.2362	67	2.6378	2.0	0.078	182	7.17	192	7.55	233	9.18	248	9.76
23034CAME4*	170	6.6929	260	10.2362	67	2.6378	2.0	0.078	182	7.17	192	7.55	233	9.18	248	9.76
23036CDE4	180	7.0866	280	11.0236	74	2.9134	2.0	0.078	192	7.56	202	7.96	248	9.78	268	10.55
23036CAME4*	180	7.0866	280	11.0236	74	2.9134	2.0	0.078	192	7.56	202	7.97	248	9.78	268	10.55
23038CAME4*	190	7.4803	290	11.4173	75	2.9528	2.0	0.078	202	7.95	214	8.43	260	10.25	278	10.94
23040CAME4*	200	7.8740	310	12.2047	82	3.2283	2.0	0.078	212	8.35	229	9.02	278	10.95	298	11.73
23044CAME4*	220	8.6614	340	13.3858	90	3.5433	2.5	0.098	234	9.21	249	9.79	302	11.89	326	12.83
23048CAME4*	240	9.4488	360	14.1732	92	3.6220	2.5	0.098	254	10.00	267	10.53	324	12.74	346	13.62
23052CAME4*	260	10.2362	400	15.7480	104	4.0945	3.0	0.118	278	10.94	291	11.44	355	13.98	382	15.04
23056CAME4*	280	11.0236	420	16.5354	106	4.1732	3.0	0.118	298	11.73	313	12.33	377	14.85	402	15.83
23060CAME4*	300	11.8110	460	18.1102	118	4.6457	3.0	0.118	318	12.52	340	13.40	412	16.24	442	17.40
23064CAME4*	320	12.5984	480	18.8976	121	4.7638	3.0	0.118	338	13.31	359	14.15	432	16.99	462	18.19
23068CAME4*	340	13.3858	520	20.4724	133	5.2362	4.0	0.157	362	14.25	384	15.10	464	18.28	498	19.61
23072CAME4*	360	14.1732	540	21.2598	134	5.2756	4.0	0.157	382	15.04	402	15.84	485	19.09	518	20.39
23076CAME4*	380	14.9606	560	22.0472	135	5.3150	4.0	0.157	402	15.83	424	16.69	505	19.90	538	21.18
23080CAME4*	400	15.7480	600	23.6220	148	5.8268	4.0	0.157	422	16.61	447	17.59	539	21.23	578	22.76
23084CAME4	420	16.5354	620	24.4094	150	5.9055	4.0	0.157	442	17.40	468	18.43	561	22.10	598	23.54
23088CAME4	440	17.3228	650	25.5906	157	6.1811	5.0	0.196	468	18.43	489	19.27	586	23.08	622	24.49
23092CAME4	460	18.1102	680	26.7717	163	6.4173	5.0	0.196	488	19.21	513	20.20	614	24.18	652	25.67
23096CAME4	480	18.8976	700	27.5591	165	6.4961	5.0	0.196	508	20.00	531	20.91	633	24.93	672	26.46

*Indicates NSK (HPS) High Performance Standard bearing. **Maximum fillet which corner radius of bearing will clear.

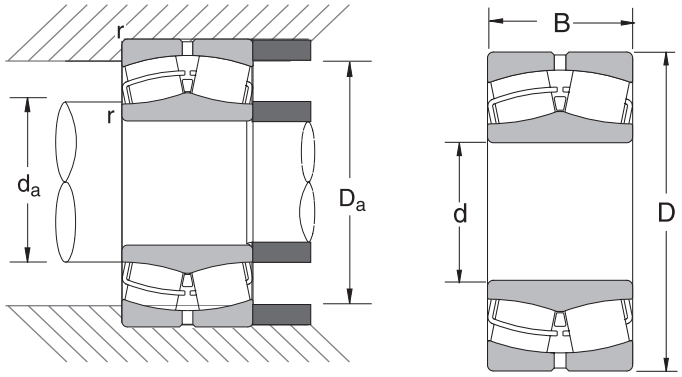

COMMON OPTIONS	
TL	Tough & Long Life
HTF	High Tough
STF	Super Tough
CAM	One Piece Brass Cage
C,CD	Two Piece Steel Cage
EA	High Capacity Steel Cage
H	Two Piece Polyamide Cage
K	1:12 Tapered Bore
G3	Inner Ring Carburized
E4	Lube Groove/Holes, Outer Ring
CO*	Normal Internal Clearance
C2	Tight Internal Clearance
C3	Greater than Normal Internal Clearance
P55	High Running Accuracy Both Rings
S11	Heat Stabilized to 200°C
VE	Vibrating Equipment

*Not shown in part number
See page D-1 for additional options.

Bearing Number	Basic Load Ratings				Limiting Speeds (RPM)		Bearing Weight (Approx.)	
	C_r		C_{or}					
	N	lbs	N	lbs	Grease	Oil	kg	lbs
23020CDE4	212000	47500	335000	75500	2200	2800	2.31	5.09
23022CDE4	293000	66000	465000	105000	2000	2400	3.76	8.29
23022CAME4	293000	66000	465000	105000	2000	2400	3.56	7.85
23024CDE4	315000	70500	525000	118000	1800	2200	4.11	9.06
23024CAME4*	395000	88500	525000	118000	1800	2200	3.93	8.66
23026CDE4	400000	90000	655000	148000	1700	2000	5.98	13.2
23026CAME4*	500000	112000	655000	148000	1700	2000	5.75	12.7
23028CDE4	420000	94500	715000	161000	1600	1900	6.49	14.3
23028CAME4*	525000	118000	715000	161000	1600	1900	6.22	13.7
23030CDE4	470000	106000	815000	183000	1400	1800	7.90	17.4
23030CAME4*	590000	132000	815000	183000	1400	1800	7.58	16.7
23032CDE4	540000	121000	955000	215000	1300	1700	9.66	21.3
23032CAME4*	675000	152000	955000	215000	1300	1700	9.33	20.6
23034CDE4	540000	121000	955000	215000	1200	1600	13.0	28.7
23034CAME4*	795000	179000	1090000	246000	1200	1600	12.4	27.3
23036CDE4	750000	168000	1270000	285000	1200	1400	17.1	37.7
23036CAME4*	935000	210000	1270000	285000	1200	1400	16.4	36.2
23038CAME4*	970000	218000	1350000	305000	1100	1400	17.6	38.8
23040CAME4*	1180000	264000	1700000	385000	1000	1300	22.6	49.8
23044CAME4*	1360000	305000	1980000	445000	950	1200	29.7	65.5
23048CAME4*	1450000	325000	2140000	480000	850	1100	32.6	71.9
23052CAME4*	1780000	400000	2580000	580000	800	950	46.6	103
23056CAME4*	1930000	433000	2950000	665000	710	900	50.5	111
23060CAME4*	2400000	539000	3700000	830000	670	850	70.5	155
23064CAME4*	2450000	550000	3850000	865000	630	800	75.6	167
23068CAME4*	2850000	640000	4400000	985000	560	710	101	223
23072CAME4*	2990000	671000	4700000	1060000	530	670	106	234
23076CAME4*	3150000	707000	5100000	1150000	530	630	113	249
23080CAME4*	3700000	831000	5900000	1330000	480	600	146	322
23084CAME4	2910000	655000	5850000	1310000	450	560	151	333
23088CAME4	3150000	705000	6350000	1430000	430	530	173	381
23092CAME4	3450000	780000	7100000	1590000	400	500	201	443
23096CAME4	3800000	850000	7950000	1790000	400	480	211	465

C_r = Dynamic Radial Load Rating C_{or} = Static Radial Load Rating
*Indicates NSK (HPS) High Performance Standard bearing.

SPHERICAL ROLLER BEARINGS: 23000 SERIES (CONT.)

BORE DIAMETER 500 - 1250 MM, 19.6850 – 49.2126 INCH

Bearing Number	Nominal Bearing Dimensions						Preferred Shoulder Diameters									
	d		D		B		r*		da				Da			
							max		min		max		min		max	
	mm	inch	mm	inch	mm	inch	mm	inch	mm	inch	mm	inch	mm	inch	mm	inch
230/500CAME4	500	19.6850	720	28.3465	167	6.5748	5	0.196	528	20.79	553	21.77	655	25.79	692	27.24
230/530CAME4	530	20.8661	780	30.7087	185	7.2835	5	0.196	558	21.97	591	23.26	706	27.80	752	29.60
230/560CAME4	560	22.0472	820	32.2835	195	7.6772	5	0.196	588	23.15	621	24.44	741	29.18	792	31.18
230/600CAME4	600	23.6220	870	34.2520	200	7.8740	5	0.196	628	24.73	671	26.41	793	31.23	842	33.14
230/630CAME4	630	24.8031	920	36.2205	212	8.3465	6	0.236	666	26.23	700	27.55	834	32.84	884	34.80
230/670CAME4	670	26.3780	980	38.5827	230	9.0551	6	0.236	706	27.80	747	29.40	891	35.08	944	37.16
230/710CAME4	710	27.9528	1030	40.5512	236	9.2913	6	0.236	746	29.38	789	31.06	936	36.86	994	39.13
230/750CAME4	750	29.5276	1090	42.9134	250	9.8425	6	0.236	786	30.95	833	32.79	990	38.98	1054	41.49
230/800CAME4	800	31.4961	1150	45.2756	258	10.1575	6	0.236	836	32.92	885	34.84	1045	41.15	1114	43.85
230/850CAME4	850	33.4646	1220	48.0315	272	10.7087	6	0.236	886	34.89	941	37.04	1109	43.67	1184	46.61
230/900CAME4	900	35.4331	1280	50.3937	280	11.0236	6	0.236	936	36.86	993	39.09	1169	46.03	1244	48.97
230/950CAME4	950	37.4016	1360	53.5433	300	11.8110	6	0.236	986	38.82	1051	41.37	1240	48.82	1324	52.12
230/1000CAME4	1000	39.3701	1420	55.9055	308	12.1260	6	0.236	1036	40.79	1103	43.42	1298	51.11	1384	54.48
230/1060CAME4	1060	41.7323	1500	59.0551	325	12.7953	8	0.314	1104	43.47	1167	45.94	1368	53.86	1456	57.32
230/1120CAME4	1120	44.0945	1580	62.2047	345	13.5827	8	0.314	1164	45.83	1231	48.46	1443	56.82	1536	60.47
230/1250CAME4	1250	49.2126	1750	68.8976	375	14.7638	8	0.314	1294	50.95	1374	54.09	1599	62.96	1706	67.16

*Maximum fillet which corner radius of bearing will clear.

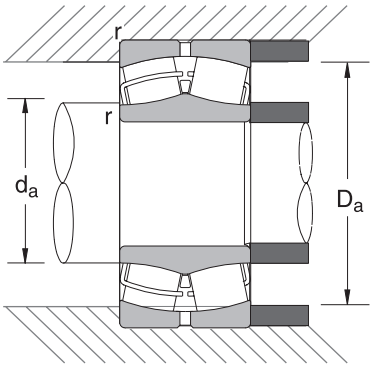

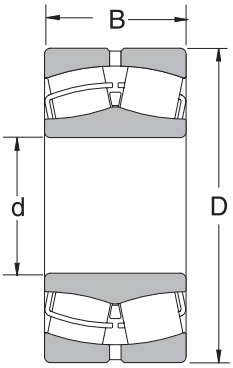

COMMON OPTIONS	
TL	Tough & Long Life
HTF	High Tough
STF	Super Tough
CAM	One Piece Brass Cage
C,CD	Two Piece Steel Cage
EA	High Capacity Steel Cage
H	Two Piece Polyamide Cage
K	1:12 Tapered Bore
G3	Inner Ring Carburized
E4	Lube Groove/Holes, Outer Ring
CO*	Normal Internal Clearance
C2	Tight Internal Clearance
C3	Greater than Normal Internal Clearance
P55	High Running Accuracy Both Rings
S11	Heat Stabilized to 200°C
VE	Vibrating Equipment

*Not shown in part number
See page D-1 for additional options.

Bearing Number	Basic Load Ratings				Limiting Speeds (RPM)		Bearing Weight (Approx.)	
	C_r		C_{or}					
	N	lbs	N	lbs	Grease	Oil	kg	lbs
230/500CAME4	3750000	850000	8100000	1820000	380	480	220	485
230/530CAME4	4400000	990000	9200000	2070000	340	430	298	657
230/560CAME4	5000000	1120000	10700000	2400000	320	400	344	758
230/600CAME4	5450000	1230000	12200000	2730000	300	360	389	858
230/630CAME4	5900000	1330000	12700000	2870000	280	340	468	1030
230/670CAME4	6850000	1540000	15000000	3350000	240	320	571	1260
230/710CAME4	7100000	1590000	15800000	3550000	240	280	647	1430
230/750CAME4	7750000	1740000	17200000	3850000	220	260	768	1690
230/800CAME4	8350000	1870000	19100000	4300000	200	240	870	1920
230/850CAME4	9300000	2090000	21400000	4800000	180	220	1020	2250
230/900CAME4	9850000	2220000	22800000	5150000	160	200	1160	2560
230/950CAME4	11300000	2550000	26500000	5950000	150	190	1400	3090
230/1000CAME4	11900000	2680000	28100000	6300000	140	170	1560	3440
230/1060CAME4	13000000	2930000	31500000	7050000	120	160	1790	3950
230/1120CAME4	15400000	3450000	38000000	8550000	110	140	2120	4670
230/1250CAME4	17400000	3900000	44500000	9950000	90	110	2766	6100

C_r = Dynamic Radial Load Rating C_{or} = Static Radial Load Rating

SPHERICAL ROLLER BEARINGS: 23100 SERIES

BORE DIAMETER 100 - 380 MM, 3.9370 – 14.9606 INCH

Bearing Number	Nominal Bearing Dimensions						Preferred Shoulder Diameters									
	d		D		B		r**		da				Da			
							max		min		max		min		max	
	mm	inch	mm	inch	mm	inch	mm	inch	mm	inch	mm	inch	mm	inch	mm	inch
23120CE4	100	3.9370	165	6.4961	52	2.0472	2.0	0.078	110	4.33	114	4.48	144	5.66	155	6.10
23120CAME4	100	3.9370	165	6.4961	52	2.0472	2.0	0.078	110	4.33	114	4.49	144	5.66	155	6.10
23122CE4	110	4.3307	180	7.0866	56	2.2047	2.0	0.078	120	4.72	128	5.02	157	6.19	170	6.69
23122CAME4*	110	4.3307	180	7.0866	56	2.2047	2.0	0.078	120	4.72	128	5.03	157	6.19	170	6.69
23124CE4	120	4.7244	200	7.8740	62	2.4409	2.0	0.078	130	5.12	138	5.43	174	6.86	190	7.48
23124CAME4*	120	4.7244	200	7.8740	62	2.4409	2.0	0.078	130	5.12	138	5.44	174	6.86	190	7.48
23126CE4	130	5.1181	210	8.2677	64	2.5197	2.0	0.078	140	5.51	149	5.87	184	7.25	200	7.87
23126CAME4*	130	5.1181	210	8.2677	64	2.5197	2.0	0.078	140	5.51	149	5.88	184	7.25	200	7.87
23128CE4	140	5.5118	225	8.8583	68	2.6772	2.0	0.078	152	5.98	158	6.24	198	7.79	213	8.39
23128CAME4*	140	5.5118	225	8.8583	68	2.6772	2.0	0.078	152	5.98	159	6.25	198	7.79	213	8.39
23130CE4	150	5.9055	250	9.8425	80	3.1496	2.0	0.078	162	6.38	174	6.85	218	8.57	238	9.37
23130CAME4*	150	5.9055	250	9.8425	80	3.1496	2.0	0.078	162	6.38	174	6.86	218	8.57	238	9.37
23132CE4	160	6.2992	270	10.6299	86	3.3858	2.0	0.078	172	6.77	185	7.30	234	9.21	258	10.16
23132CAME4*	160	6.2992	270	10.6299	86	3.3858	2.0	0.078	172	6.77	186	7.32	234	9.21	258	10.16
23134CE4	170	6.6929	280	11.0236	88	3.4646	2.0	0.078	182	7.17	195	7.66	245	9.63	268	10.55
23134CAME4*	170	6.6929	280	11.0236	88	3.4646	2.0	0.078	182	7.17	195	7.67	245	9.63	268	10.55
23136CE4	180	7.0866	300	11.8110	96	3.7795	2.5	0.098	194	7.64	207	8.13	260	10.24	286	11.26
23136CAME4*	180	7.0866	300	11.8110	96	3.7795	2.5	0.098	194	7.64	207	8.13	260	10.24	286	11.26
23138CE4	190	7.4803	320	12.5984	104	4.0945	2.5	0.098	204	8.03	219	8.64	275	10.84	306	12.05
23138CAME4*	190	7.4803	320	12.5984	104	4.0945	2.5	0.098	204	8.03	219	8.64	275	10.84	306	12.05
23140CE4	200	7.8740	340	13.3858	112	4.4094	2.5	0.098	214	8.43	232	9.15	293	11.52	326	12.83
23140CAME4*	200	7.8740	340	13.3858	112	4.4094	2.5	0.098	214	8.43	232	9.15	293	11.52	326	12.83
23144CE4	220	8.6614	370	14.5669	120	4.7244	3.0	0.118	238	9.37	254	10.00	320	12.58	352	13.86
23144CAME4*	220	8.6614	370	14.5669	120	4.7244	3.0	0.118	238	9.37	254	9.99	320	12.58	352	13.86
23148CE4	240	9.4488	400	15.7480	128	5.0394	3.0	0.118	258	10.16	275	10.83	346	13.64	382	15.04
23148CAME4*	240	9.4488	400	15.7480	128	5.0394	3.0	0.118	258	10.16	275	10.84	346	13.64	382	15.04
TLI-112618CA	250	9.8425	410	16.1417	128	5.0393	3.0	0.118	268	10.55	--	--	357	14.06	392	15.43
23152CAME4*	260	10.2362	440	17.3228	144	5.6693	3.0	0.118	278	10.94	299	11.77	379	14.93	422	16.61
23156CAME4*	280	11.0236	460	18.1102	146	5.7480	4.0	0.157	302	11.89	320	12.59	400	15.73	438	17.24
23160CAME4*	300	11.8110	500	19.6850	160	6.2992	4.0	0.157	322	12.68	344	13.56	433	17.05	478	18.82
23164CAME4*	320	12.5984	540	21.2598	176	6.9291	4.0	0.157	342	13.46	368	14.50	466	18.35	518	20.39
23168CAME4*	340	13.3858	580	22.8346	190	7.4803	4.0	0.157	362	14.25	395	15.54	498	19.62	558	21.97
23172CAME4*	360	14.1732	600	23.6220	192	7.5591	4.0	0.157	382	15.04	412	16.24	519	20.45	578	22.76
23176CAME4	380	14.9606	620	24.4094	194	7.6378	4.0	0.157	402	15.83	433	17.04	540	21.26	598	23.54

*Indicates NSK (HPS) High Performance Standard bearing. **Maximum fillet which corner radius of bearing will clear.

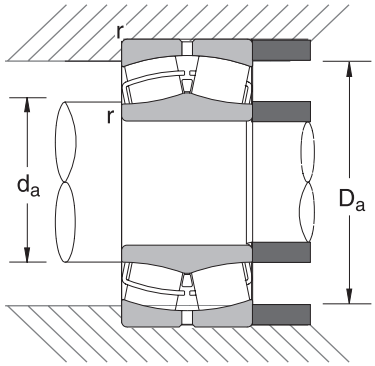

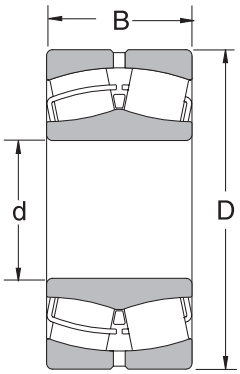

COMMON OPTIONS	
TL	Tough & Long Life
HTF	High Tough
STF	Super Tough
CAM	One Piece Brass Cage
C,CD	Two Piece Steel Cage
EA	High Capacity Steel Cage
H	Two Piece Polyamide Cage
K	1:12 Tapered Bore
G3	Inner Ring Carburized
E4	Lube Groove/Holes, Outer Ring
CO*	Normal Internal Clearance
C2	Tight Internal Clearance
C3	Greater than Normal Internal Clearance
P55	High Running Accuracy Both Rings
S11	Heat Stabilized to 200°C
VE	Vibrating Equipment

*Not shown in part number
See page D-1 for additional options.

Bearing Number	Basic Load Ratings				Limiting Speeds (RPM)		Bearing Weight (Approx.)	
	C_r		C_{or}					
	N	lbs	N	lbs	Grease	Oil	kg	lbs
23120CE4	345000	78000	530000	119000	1700	2200	4.38	9.66
23120CAME4	345000	78000	530000	119000	1700	2200	4.21	9.28
23122CE4	385000	86500	630000	141000	1600	2000	5.70	12.6
23122CAME4*	480000	108000	630000	141000	1600	2000	5.47	12.1
23124CE4	465000	105000	720000	162000	1400	1800	7.85	17.3
23124CAME4*	580000	131000	720000	162000	1400	1800	7.65	16.9
23126CE4	505000	113000	825000	186000	1300	1700	8.69	19.2
23126CAME4*	630000	141000	825000	186000	1300	1700	8.42	18.6
23128CE4	580000	130000	945000	212000	1200	1600	10.5	23.1
23128CAME4*	725000	163000	945000	212000	1200	1600	9.96	22.0
23130CE4	725000	163000	1180000	266000	1100	1400	15.8	34.8
23130CAME4*	905000	203000	1180000	266000	1100	1400	15.4	34.0
23132CE4	855000	192000	1400000	315000	1000	1300	20.3	44.8
23132CAME4*	1070000	240000	1400000	315000	1000	1300	19.9	43.9
23134CE4	940000	212000	1570000	355000	1000	1300	21.8	48.1
23134CAME4*	1180000	265000	1570000	355000	1000	1300	20.8	45.9
23136CE4	1050000	237000	1760000	395000	900	1200	27.5	60.6
23136CAME4*	1320000	296000	1760000	395000	900	1200	26.7	58.9
23138CE4	1190000	267000	2020000	455000	850	1100	34.5	76.1
23138CAME4*	1480000	335000	2020000	455000	850	1100	33.7	74.3
23140CE4	1360000	305000	2330000	525000	800	1000	42.7	94.1
23140CAME4*	1700000	380000	2330000	525000	800	1000	41.4	91.3
23144CE4	1570000	350000	2710000	610000	710	950	53.0	117
23144CAME4*	1960000	440000	2710000	610000	710	950	51.7	114
23148CE4	1790000	400000	3100000	700000	670	850	66.9	147
23148CAME4*	2230000	500000	3100000	700000	670	850	63.2	139
TLI-112618CA	1780000	400200	3150000	708200	640	840	65.2	143
23152CAME4*	2700000	606000	3750000	850000	600	800	88.2	194
23156CAME4*	2790000	626000	4000000	900000	560	750	94.3	208
23160CAME4*	3350000	752000	4800000	1080000	500	670	125	276
23164CAME4*	3850000	865000	5500000	1230000	480	600	162	357
23168CAME4*	4500000	1010000	6600000	1480000	430	560	206	454
23172CAME4*	4800000	1070000	7100000	1590000	400	530	217	478
23176CAME4	4000000	895000	7600000	1700000	400	500	229	505

C_r = Dynamic Radial Load Rating C_{or} = Static Radial Load Rating
*Indicates NSK (HPS) High Performance Standard bearing.

SPHERICAL ROLLER BEARINGS: 23100 SERIES (CONT.)

BORE DIAMETER 400 - 900 MM, 15.7480 – 35.4331 INCH

Bearing Number	Nominal Bearing Dimensions						Preferred Shoulder Diameters									
	d		D		B		r*		da				Da			
							max		min		max		min		max	
	mm	inch	mm	inch	mm	inch	mm	inch	mm	inch	mm	inch	mm	inch	mm	inch
23180CAME4	400	15.7480	650	25.5906	200	7.8740	5	0.196	428	16.85	457	18.00	568	22.37	622	24.49
23184CAME4	420	16.5354	700	27.5591	224	8.8189	5	0.196	448	17.64	482	18.98	607	23.89	672	26.46
23188CAME4	440	17.3228	720	28.3465	226	8.8976	5	0.196	468	18.43	502	19.75	627	24.67	692	27.24
23192CAME4	460	18.1102	760	29.9213	240	9.4488	6	0.236	496	19.53	526	20.72	661	26.01	724	28.50
23196CAME4	480	18.8976	790	31.1024	248	9.7638	6	0.236	516	20.31	548	21.58	688	27.07	754	29.69
231/500CAME4	500	19.6850	830	32.6772	264	10.3937	6	0.236	536	21.10	572	22.53	720	28.35	794	31.26
231/530CAME4	530	20.8661	870	34.2520	272	10.7087	6	0.236	566	22.28	606	23.84	757	29.82	834	32.83
231/560CAME4	560	22.0472	920	36.2205	280	11.0236	6	0.236	596	23.46	641	25.23	803	31.63	884	34.80
231/600CAME4	600	23.6220	980	38.5827	300	11.8110	6	0.236	636	25.04	685	26.97	856	33.69	944	37.17
231/630CAME4	630	24.8031	1030	40.5512	315	12.4016	6	0.236	666	26.22	720	28.33	899	35.40	994	39.13
231/670CAME4	670	26.3780	1090	42.9134	336	13.2283	6	0.236	706	27.80	763	30.03	951	37.45	1054	41.50
231/710CAME4	710	27.9528	1150	45.2756	345	13.5827	8	0.314	754	29.69	809	31.85	1008	39.67	1106	43.54
231/750CAME4	750	29.5276	1220	48.0315	365	14.3701	8	0.314	794	31.26	859	33.81	1069	42.07	1176	46.30
231/800CAME4	800	31.4961	1280	50.3937	375	14.7638	8	0.314	844	33.23	909	35.79	1126	44.34	1236	48.66
231/850CAME4	850	33.4646	1360	53.5433	400	15.7480	10	0.393	904	35.59	969	38.13	1196	47.08	1306	51.42
231/900CAME4	900	35.4331	1420	55.9055	412	16.2205	10	0.393	954	37.56	1013	39.90	1253	49.33	1366	53.78

*Maximum fillet which corner radius of bearing will clear.

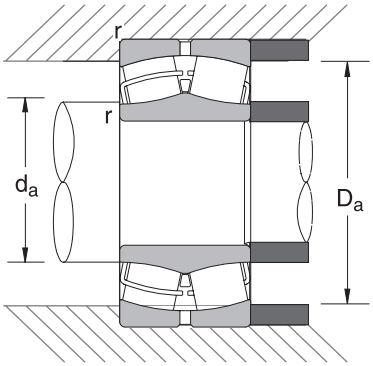

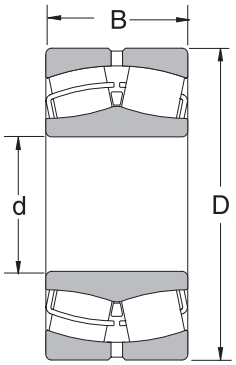

COMMON OPTIONS	
TL	Tough & Long Life
HTF	High Tough
STF	Super Tough
CAM	One Piece Brass Cage
C,CD	Two Piece Steel Cage
EA	High Capacity Steel Cage
H	Two Piece Polyamide Cage
K	1:12 Tapered Bore
G3	Inner Ring Carburized
E4	Lube Groove/Holes, Outer Ring
CO*	Normal Internal Clearance
C2	Tight Internal Clearance
C3	Greater than Normal Internal Clearance
P55	High Running Accuracy Both Rings
S11	Heat Stabilized to 200°C
VE	Vibrating Equipment

*Not shown in part number
See page D-1 for additional options.

Bearing Number	Basic Load Ratings				Limiting Speeds (RPM)		Bearing Weight (Approx.)	
	C_r		C_{or}					
	N	lbs	N	lbs	Grease	Oil	kg	lbs
23180CAME4	4150000	930000	7900000	1780000	380	480	257	567
23184CAME4	5000000	1120000	9400000	2110000	340	450	341	752
23188CAME4	5300000	1200000	10300000	2330000	320	430	360	794
23192CAME4	5700000	1280000	10900000	2450000	300	400	423	933
23196CAME4	6050000	1360000	11700000	2640000	300	380	475	1050
231/500CAME4	6850000	1540000	13400000	3000000	280	360	567	1250
231/530CAME4	7150000	1610000	14100000	3150000	260	340	628	1380
231/560CAME4	7850000	1760000	1550000	3500000	240	320	727	1600
231/600CAME4	8750000	1970000	17500000	3950000	220	280	898	1980
231/630CAME4	9600000	2160000	19400000	4350000	200	260	1040	2290
231/670CAME4	10600000	2390000	21600000	4850000	190	240	1230	2710
231/710CAME4	11800000	2660000	24500000	5500000	170	220	1415	3120
231/750CAME4	13100000	2940000	27300000	6150000	160	200	1696	3740
231/800CAME4	13800000	3100000	29200000	6550000	150	190	1870	4120
231/850CAME4	15800000	3550000	34000000	7700000	130	170	2263	4990
231/900CAME4	17000000	3850000	37000000	8300000	120	160	2489	5490

C_r = Dynamic Radial Load Rating C_{or} = Static Radial Load Rating

SPHERICAL ROLLER BEARINGS: 23200 SERIES

BORE DIAMETER 70 - 280 MM, 2.7559 – 11.0236 INCH

Bearing Number	Nominal Bearing Dimensions						Preferred Shoulder Diameters									
	d		D		B		r**		da				Da			
							max		min		max		min		max	
	mm	inch	mm	inch	mm	inch	mm	inch	mm	inch	mm	inch	mm	inch	mm	inch
23214CAME4	70	2.7559	125	4.9213	39.7	1.5630	1.5	0.059	79	3.11	83	3.26	108	4.24	116	4.57
23218CE4	90	3.5433	160	6.2992	52.4	2.0630	2.0	0.078	100	3.94	105	4.15	137	5.40	150	5.91
23218CAME4	90	3.5433	160	6.2992	52.4	2.0630	2.0	0.078	100	3.94	105	4.16	137	5.40	150	5.91
23219CAME4	95	3.7402	170	6.6929	55.6	2.1890	2.0	0.078	107	4.21	111	4.37	146	5.74	158	6.22
23220CE4	100	3.9370	180	7.0866	60.3	2.3740	2.0	0.078	112	4.41	118	4.67	155	6.09	168	6.61
23220CAME4*	100	3.9370	180	7.0866	60.3	2.3740	2.0	0.078	112	4.41	118	4.66	155	6.09	168	6.61
23222CE4	110	4.3307	200	7.8740	69.8	2.7480	2.0	0.078	122	4.80	130	5.12	169	6.66	188	7.40
23222CAME4*	110	4.3307	200	7.8740	69.8	2.7480	2.0	0.078	122	4.80	130	5.13	169	6.66	188	7.40
23224CE4	120	4.7244	215	8.4646	76	2.9921	2.0	0.078	132	5.20	140	5.52	182	7.16	203	7.99
23224CAME4*	120	4.7244	215	8.4646	76	2.9921	2.0	0.078	132	5.20	140	5.54	182	7.16	203	7.99
23226CE4	130	5.1181	230	9.0551	80	3.1496	2.5	0.098	144	5.67	150	5.93	195	7.69	216	8.50
23226CAME4*	130	5.1181	230	9.0551	80	3.1496	2.5	0.098	144	5.67	150	5.95	195	7.69	216	8.50
23228CE4	140	5.5118	250	9.8425	88	3.4646	2.5	0.098	154	6.06	163	6.44	213	8.38	236	9.29
23228CAME4*	140	5.5118	250	9.8425	88	3.4646	2.5	0.098	154	6.06	163	6.46	213	8.38	236	9.29
23230CE4	150	5.9055	270	10.6299	96	3.7795	2.5	0.098	164	6.46	176	6.96	229	9.02	256	10.08
23230CAME4*	150	5.9055	270	10.6299	96	3.7795	2.5	0.098	164	6.46	176	6.98	229	9.02	256	10.08
23232CE4	160	6.2992	290	11.4173	104	4.0945	2.5	0.098	174	6.85	189	7.44	244	9.62	276	10.87
23232CAME4*	160	6.2992	290	11.4173	104	4.0945	2.5	0.098	174	6.85	189	7.47	244	9.62	276	10.87
23234CE4	170	6.6929	310	12.2047	110	4.3307	3.0	0.118	188	7.40	201	7.93	261	10.28	292	11.50
23234CAME4*	170	6.6929	310	12.2047	110	4.3307	3.0	0.118	188	7.40	201	7.94	261	10.28	292	11.50
23236CE4	180	7.0866	320	12.5984	112	4.4094	3.0	0.118	198	7.80	211	8.33	273	10.76	302	11.89
23236CAME4*	180	7.0866	320	12.5984	112	4.4094	3.0	0.118	198	7.80	211	8.31	273	10.76	302	11.89
23238CE4	190	7.4803	340	13.3858	120	4.7244	3.0	0.118	208	8.19	222	8.74	288	11.32	322	12.68
23238CAME4*	190	7.4803	340	13.3858	120	4.7244	3.0	0.118	208	8.19	222	8.74	288	11.32	322	12.68
23240CE4	200	7.8740	360	14.1732	128	5.0394	3.0	0.118	218	8.58	237	9.34	307	12.08	342	13.46
23240CAME4*	200	7.8740	360	14.1732	128	5.0394	3.0	0.118	218	8.58	237	9.35	307	12.08	342	13.46
23244CE4	220	8.6614	400	15.7480	144	5.6693	3.0	0.118	238	9.37	260	10.25	337	13.25	382	15.04
23244CAME4*	220	8.6614	400	15.7480	144	5.6693	3.0	0.118	238	9.37	260	10.23	337	13.25	382	15.04
23248CAME4*	240	9.4488	440	17.3228	160	6.2992	3.0	0.118	258	10.16	283	11.13	372	14.65	422	16.61
23252CAME4*	260	10.2362	480	18.8976	174	6.8504	4.0	0.157	282	11.10	308	12.13	405	15.95	458	18.03
23256CAME4*	280	11.0236	500	19.6850	176	6.9291	4.0	0.157	302	11.89	328	12.91	425	16.73	478	18.82

*Indicates NSK (HPS) High Performance Standard bearing. **Maximum fillet which corner radius of bearing will clear.

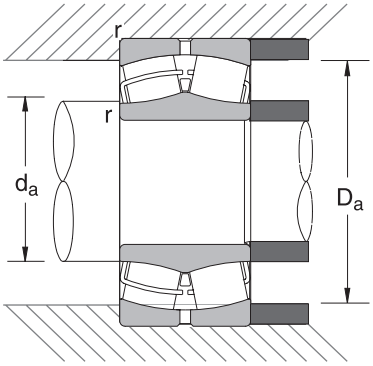

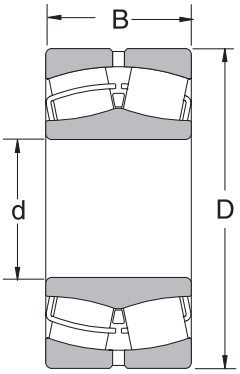

COMMON OPTIONS	
TL	Tough & Long Life
HTF	High Tough
STF	Super Tough
CAM	One Piece Brass Cage
C,CD	Two Piece Steel Cage
EA	High Capacity Steel Cage
H	Two Piece Polyamide Cage
K	1:12 Tapered Bore
G3	Inner Ring Carburized
E4	Lube Groove/Holes, Outer Ring
CO*	Normal Internal Clearance
C2	Tight Internal Clearance
C3	Greater than Normal Internal Clearance
P55	High Running Accuracy Both Rings
S11	Heat Stabilized to 200°C
VE	Vibrating Equipment

*Not shown in part number
See page D-1 for additional options.

Bearing Number	Basic Load Ratings				Limiting Speeds (RPM)		Bearing Weight (Approx.)	
	C_r		C_{or}					
	N	lbs	N	lbs	Grease	Oil	kg	lbs
23214CAME4	203000	45500	279000	62500	2400	3000	2.20	4.85
23218CE4	340000	76500	490000	110000	1800	2400	4.51	9.94
23218CAME4	340000	76500	490000	110000	1800	2400	4.53	9.99
23219CAME4	370000	83000	525000	118000	1700	2200	5.27	11.6
23220CE4	420000	94000	605000	135000	1600	2200	6.60	14.6
23220CAME4*	525000	118000	605000	135000	1600	2200	6.12	13.5
23222CE4	515000	116000	760000	171000	1500	1900	9.54	21.0
23222CAME4*	645000	145000	760000	171000	1500	1900	9.58	21.1
23224CE4	630000	142000	970000	218000	1300	1700	12.1	26.7
23224CAME4*	790000	178000	970000	218000	1300	1700	12.0	26.5
23226CE4	700000	158000	1080000	243000	1200	1600	14.3	31.5
23226CAME4*	875000	197000	1080000	243000	1200	1600	14.2	31.3
23228CE4	835000	187000	1300000	292000	1100	1500	18.8	41.5
23228CAME4*	1040000	234000	1300000	292000	1100	1500	18.8	41.5
23230CE4	975000	219000	1560000	350000	1100	1400	24.2	53.4
23230CAME4*	1220000	274000	1560000	350000	1100	1400	24.2	53.4
23232CE4	1100000	247000	1770000	395000	1000	1300	30.5	67.2
23232CAME4*	1370000	310000	1770000	395000	1000	1300	30.3	66.7
23234CE4	1200000	270000	1910000	430000	900	1200	36.4	80.3
23234CAME4*	1500000	335000	1910000	430000	900	1200	36.6	80.7
23236CE4	1300000	292000	2110000	475000	850	1100	38.9	85.8
23236CAME4*	1620000	365000	2110000	475000	850	1100	38.8	85.5
23238CE4	1440000	325000	2350000	530000	800	1100	47.6	105
23238CAME4*	1800000	405000	2350000	530000	800	1100	47.6	105
23240CE4	1660000	375000	2750000	620000	750	1000	57.1	126
23240CAME4*	2070000	465000	2750000	620000	750	1000	56.2	124
23244CE4	2010000	455000	3400000	765000	670	900	80.4	177
23244CAME4*	2520000	565000	3400000	765000	670	900	80.6	178
23248CAME4*	3050000	680000	4050000	910000	630	800	106	234
23252CAME4*	3400000	760000	4550000	1020000	560	750	137	302
23256CAME4*	3600000	808000	4900000	1110000	530	670	147	324

C_r = Dynamic Radial Load Rating C_{or} = Static Radial Load Rating
*Indicates NSK (HPS) High Performance Standard bearing.

SPHERICAL ROLLER BEARINGS: 23200 SERIES (CONT.)

BORE DIAMETER 300 - 950 MM, 11.8110 – 37.4016 INCH

Bearing Number	Nominal Bearing Dimensions						Preferred Shoulder Diameters									
	d		D		B		r*		da				Da			
							max		min		max		min		max	
	mm	inch	mm	inch	mm	inch	mm	inch	mm	inch	mm	inch	mm	inch	mm	inch
23260CAME4*	300	11.8110	540	21.2598	192	7.5591	4.0	0.157	322	12.68	352	13.87	457	18.00	518	20.39
23264CAME4*	320	12.5984	580	22.8346	208	8.1890	4.0	0.157	342	13.46	378	14.88	488	19.21	558	21.97
23268CAME4	340	13.3858	620	24.4094	224	8.8189	5.0	0.196	368	14.49	402	15.83	520	20.49	592	23.31
23272CAME4	360	14.1732	650	25.5906	232	9.1339	5.0	0.196	388	15.28	422	16.62	548	21.59	622	24.49
23276CAME4	380	14.9606	680	26.7717	240	9.4488	5.0	0.196	408	16.06	446	17.55	578	22.74	652	25.67
23280CAME4	400	15.7480	720	28.3465	256	10.0787	5.0	0.196	428	16.85	469	18.45	609	23.99	692	27.24
23284CAME4	420	16.5354	760	29.9213	272	10.7087	6.0	0.236	456	17.95	495	19.48	644	25.34	724	28.50
23288CAME4	440	17.3228	790	31.1024	280	11.0236	6.0	0.236	476	18.74	517	20.34	668	26.31	754	29.69
23292CAME4	460	18.1102	830	32.6772	296	11.6535	6.0	0.236	496	19.53	545	21.45	702	27.63	794	31.26
23296CAME4	480	18.8976	870	34.2520	310	12.2047	6.0	0.236	516	20.31	564	22.19	733	28.86	834	32.83
232/500CAME4	500	19.6850	920	36.2205	336	13.2283	6.0	0.236	536	21.10	593	23.36	773	30.44	884	34.80
232/530CAME4	530	20.8661	980	38.5827	355	13.9764	8.0	0.314	574	22.60	630	24.81	823	32.41	936	36.85
232/560CAME4	560	22.0472	1030	40.5512	365	14.3701	8.0	0.314	604	23.78	668	26.29	869	34.23	986	38.82
232/600CAME4	600	23.6220	1090	42.9134	388	15.2756	8.0	0.314	644	25.35	713	28.07	923	36.32	1046	41.18
232/630CAME4	630	24.8031	1150	45.2756	412	16.2205	10.0	0.393	684	26.93	746	29.36	970	38.19	1096	43.15
232/670CAME4	670	26.3780	1220	48.0315	438	17.2441	10.0	0.393	724	28.50	786	30.94	1024	40.32	1166	45.91
232/710CAME4	710	27.9528	1280	50.3937	450	17.7165	10.0	0.393	764	30.08	834	32.83	1080	42.51	1226	48.27
232/750CAME4	750	29.5276	1360	53.5433	475	18.7008	12.0	0.472	814	32.05	893	35.14	1147	45.17	1296	51.02
232/800CAME4	800	31.4961	1420	55.9055	488	19.2126	12.0	0.472	864	34.02	932	36.70	1208	47.55	1356	53.39
232/850CAME4	850	33.4646	1500	59.0551	515	20.2756	12.0	0.472	914	35.98	987	38.86	1274	50.16	1436	56.54
232/950CAME4	950	37.4016	1660	65.3543	530	20.8661	12.0	0.472	1014	39.92	1110	43.71	1428	56.22	1596	62.83

*Maximum fillet which corner radius of bearing will clear.

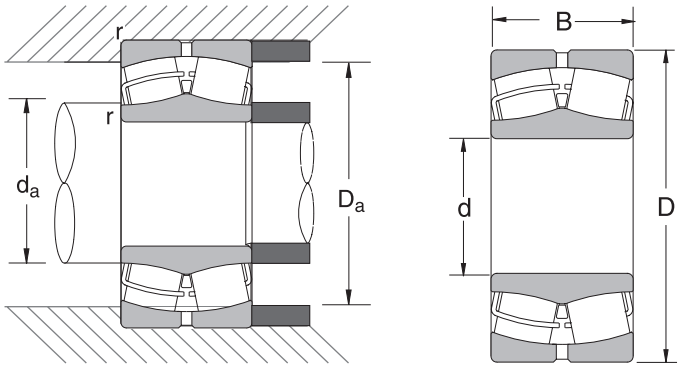

COMMON OPTIONS	
TL	Tough & Long Life
HTF	High Tough
STF	Super Tough
CAM	One Piece Brass Cage
C,CD	Two Piece Steel Cage
EA	High Capacity Steel Cage
H	Two Piece Polyamide Cage
K	1:12 Tapered Bore
G3	Inner Ring Carburized
E4	Lube Groove/Holes, Outer Ring
CO*	Normal Internal Clearance
C2	Tight Internal Clearance
C3	Greater than Normal Internal Clearance
P55	High Running Accuracy Both Rings
S11	Heat Stabilized to 200°C
VE	Vibrating Equipment

*Not shown in part number
See page D-1 for additional options.

Bearing Number	Basic Load Ratings				Limiting Speeds (RPM)		Bearing Weight (Approx.)	
	C_r		C_{or}					
	N	lbs	N	lbs	Grease	Oil	kg	lbs
23260CAME4*	4250000	955000	5900000	1330000	480	630	189	417
23264CAME4*	4850000	1089000	6900000	1550000	450	600	239	527
23268CAME4	4400000	990000	7800000	1760000	400	530	295	650
23272CAME4	4800000	1080000	8550000	1920000	380	500	340	750
23276CAME4	5150000	1160000	9200000	2070000	360	480	372	820
23280CAME4	5800000	1300000	10400000	2340000	340	450	449	990
23284CAME4	6450000	1450000	11700000	2630000	320	430	534	1180
23288CAME4	6900000	1550000	12800000	2870000	300	400	594	1310
23292CAME4	7350000	1650000	13700000	3100000	280	380	691	1520
23296CAME4	7850000	1770000	14400000	3250000	260	360	795	1750
232/500CAME4	9000000	2020000	16600000	3750000	260	320	969	2140
232/530CAME4	10100000	2270000	18800000	4250000	240	300	1170	2580
232/560CAME4	10900000	2460000	20500000	4600000	220	280	1320	2910
232/600CAME4	12700000	2870000	24900000	5600000	200	260	1590	3510
232/630CAME4	13400000	3000000	25600000	5750000	180	240	1850	4080
232/670CAME4	14900000	3350000	28700000	6450000	170	220	2210	4870
232/710CAME4	15700000	3500000	30500000	6850000	160	200	2470	5450
232/750CAME4	17700000	3950000	35500000	7950000	140	190	2980	6570
232/800CAME4	20300000	4550000	41000000	9200000	130	170	3250	7170
232/850CAME4	22300000	5000000	45500000	10200000	120	160	3890	8580
232/950CAME4	24700000	5550000	50500000	11300000	100	130	4800	10600

C_r = Dynamic Radial Load Rating C_{or} = Static Radial Load Rating
*Indicates NSK (HPS) High Performance Standard bearing.

SPHERICAL ROLLER BEARINGS: 23900 SERIES

BORE DIAMETER 130 - 750 MM, 5.1181 – 29.5276 INCH

Bearing Number	Nominal Bearing Dimensions						Preferred Shoulder Diameters									
	d		D		B		r**		da				Da			
							max		min		max		min		max	
	mm	inch	mm	inch	mm	inch	mm	inch	mm	inch	mm	inch	mm	inch	mm	inch
23926CAME4	130	5.1181	180	7.0866	37	1.4567	1.5	0.059	140	5.47	142	5.58	165	6.51	170	6.73
23932CAME4*	160	6.2992	220	8.6614	45	1.7717	2.0	0.078	170	6.69	174	6.86	203	7.98	210	8.27
23934CAME4*	170	6.6929	230	9.0551	45	1.7717	2.0	0.078	180	7.09	184	7.26	213	8.38	220	8.66
23936CAME4*	180	7.0866	250	9.8425	52	2.0472	2.0	0.078	190	7.48	197	7.75	230	9.05	240	9.45
23938CAME4*	190	7.4803	260	10.2362	52	2.0472	2.0	0.078	200	7.87	207	8.14	240	9.45	250	9.84
23940CAME4*	200	7.8740	280	11.0236	60	2.3622	2.0	0.078	212	8.35	220	8.66	258	10.15	268	10.55
23944CAME4*	220	8.6614	300	11.8110	60	2.3622	2.0	0.078	232	9.13	239	9.42	278	10.91	288	11.34
23948CAME4*	240	9.4488	320	12.5984	60	2.3622	2.0	0.078	252	9.92	260	10.22	298	11.71	308	12.13
23952CAME4*	260	10.2362	360	14.1732	75	2.9528	2.0	0.078	272	10.71	285	11.23	332	13.09	348	13.70
23956CAME4*	280	11.0236	380	14.9606	75	2.9528	2.0	0.078	292	11.50	306	12.03	351	13.80	368	14.49
23960CAME4*	300	11.8110	420	16.5354	90	3.5433	2.5	0.098	314	12.36	330	13.00	385	15.17	406	15.98
23964CAME4*	320	12.5984	440	17.3228	90	3.5433	2.5	0.098	334	13.15	351	13.83	406	15.98	426	16.77
23968CAME4*	340	13.3858	460	18.1102	90	3.5433	2.5	0.098	354	13.94	370	14.55	427	16.78	446	17.56
23972CAME4*	360	14.1732	480	18.8976	90	3.5433	2.5	0.098	374	14.72	391	15.39	447	17.58	466	18.35
23976CAME4*	380	14.9606	520	20.4724	106	4.1732	3.0	0.118	398	15.67	416	16.39	481	18.95	502	19.76
23980CAME4*	400	15.7480	540	21.2598	106	4.1732	3.0	0.118	418	16.46	436	17.15	501	19.71	522	20.55
23984CAME4*	420	16.5354	560	22.0472	106	4.1732	3.0	0.118	438	17.24	456	17.95	521	20.52	542	21.34
23988CAME4	440	17.3228	600	23.6220	118	4.6457	3.0	0.118	458	18.03	480	18.90	554	21.83	582	22.91
23992CAME4	460	18.1102	620	24.4094	118	4.6457	3.0	0.118	478	18.82	500	19.70	575	22.63	602	23.70
23996CAME4	480	18.8976	650	25.5906	128	5.0394	4.0	0.157	502	19.76	522	20.56	601	23.68	628	24.72
239/500CAME4	500	19.6850	670	26.3780	128	5.0394	4.0	0.157	522	20.55	543	21.37	622	24.49	648	25.51
239/530CAME4	530	20.8661	710	27.9528	136	5.3543	4.0	0.157	552	21.73	575	22.65	659	25.95	688	27.09
239/560CAME4	560	22.0472	750	29.5276	140	5.5118	4.0	0.157	582	22.91	608	23.95	697	27.44	728	28.66
239/600CAME4	600	23.6220	800	31.4961	150	5.9055	4.0	0.157	622	24.49	650	25.60	745	29.30	778	30.63
239/630CAME4	630	24.8031	850	33.4646	165	6.4961	5.0	0.196	658	25.91	684	26.93	786	30.95	822	32.36
239/670CAME4	670	26.3780	900	35.4331	170	6.6929	5.0	0.196	698	27.48	728	28.66	836	32.92	872	34.33
239/710CAME4	710	27.9528	950	37.4016	180	7.0866	5.0	0.196	738	29.06	773	30.45	883	34.77	922	36.30
239/750CAME4	750	29.5276	1000	39.3701	185	7.2835	5.0	0.196	778	30.63	814	32.03	931	36.65	972	38.27

*Indicates NSK (HPS) High Performance Standard bearing. **Maximum fillet which corner radius of bearing will clear.

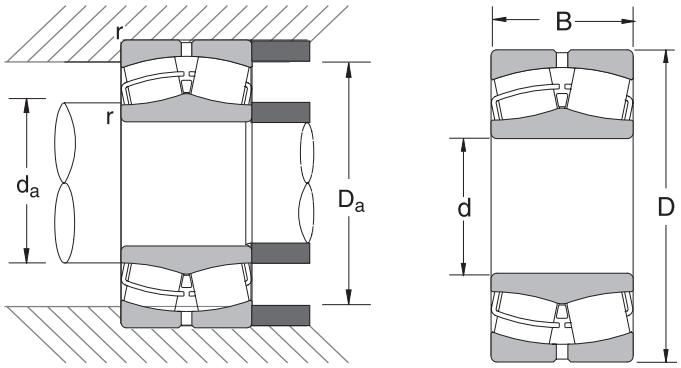

COMMON OPTIONS	
TL	Tough & Long Life
HTF	High Tough
STF	Super Tough
CAM	One Piece Brass Cage
C,CD	Two Piece Steel Cage
EA	High Capacity Steel Cage
H	Two Piece Polyamide Cage
K	1:12 Tapered Bore
G3	Inner Ring Carburized
E4	Lube Groove/Holes, Outer Ring
CO*	Normal Internal Clearance
C2	Tight Internal Clearance
C3	Greater than Normal Internal Clearance
P55	High Running Accuracy Both Rings
S11	Heat Stabilized to 200°C
VE	Vibrating Equipment

*Not shown in part number
See page D-1 for additional options.

Bearing Number	Basic Load Ratings				Limiting Speeds (RPM)		Bearing Weight (Approx.)	
	C_r		C_{or}					
	N	lbs	N	lbs	Grease	Oil	kg	lbs
23926CAME4	239000	54000	425000	95000	1800	2200	2.85	6.28
23932CAME4*	450000	101000	675000	152000	1400	1800	4.97	11.0
23934CAME4*	440000	98500	660000	148000	1300	1700	5.38	11.9
23936CAME4*	590000	133000	890000	200000	1200	1600	7.64	16.8
23938CAME4*	575000	130000	875000	197000	1200	1500	8.03	17.7
23940CAME4*	710000	159000	1060000	239000	1100	1400	11.0	24.3
23944CAME4*	785000	176000	1240000	278000	1000	1300	12.2	26.9
23948CAME4*	795000	179000	1300000	292000	950	1200	13.3	29.3
23952CAME4*	1170000	262000	1870000	420000	850	1000	23.0	50.7
23956CAME4*	1160000	260000	1950000	440000	800	950	24.5	54.0
23960CAME4*	1540000	346000	2490000	560000	710	900	38.2	84.2
23964CAME4*	1620000	364000	2750000	620000	670	850	40.6	89.5
23968CAME4*	1670000	375000	2840000	635000	630	800	42.4	93.5
23972CAME4*	1730000	388000	3050000	690000	600	750	44.7	98.5
23976CAME4*	2340000	525000	4100000	925000	530	670	65.4	144
23980CAME4*	2370000	532000	4250000	955000	530	630	69.1	152
23984CAME4*	2340000	525000	4250000	955000	500	600	71.6	158
23988CAME4	2190000	490000	4800000	1080000	450	560	96.3	212
23992CAME4	2220000	500000	4950000	1110000	430	530	100	220
23996CAME4	2580000	580000	5850000	1310000	400	500	121	267
239/500CAME4	2460000	550000	5550000	1250000	400	500	124	273
239/530CAME4	2930000	660000	6800000	1530000	360	450	149	328
239/560CAME4	3100000	700000	7250000	1630000	340	430	172	379
239/600CAME4	3450000	775000	8100000	1830000	320	400	205	452
239/630CAME4	4000000	895000	9350000	2100000	300	360	259	571
239/670CAME4	4350000	985000	10300000	2320000	260	340	300	661
239/710CAME4	4800000	1080000	11700000	2640000	240	300	352	776
239/750CAME4	5250000	1180000	12800000	2880000	220	280	398	877

C_r = Dynamic Radial Load Rating C_{or} = Static Radial Load Rating
*Indicates NSK (HPS) High Performance Standard bearing.

SPHERICAL ROLLER BEARINGS: 23900 SERIES (CONT.)

BORE DIAMETER 800 - 1400 MM, 31.4961 – 55.1181 INCH

Bearing Number	Nominal Bearing Dimensions						Preferred Shoulder Diameters									
	d		D		B		r*		da				Da			
							max		min		max		min		max	
	mm	inch	mm	inch	mm	inch	mm	inch	mm	inch	mm	inch	mm	inch	mm	inch
239/800CAME4	800	31.4961	1060	41.7323	195	7.6772	5.0	0.196	828	32.60	865	34.05	987	38.86	1032	40.63
239/850CAME4	850	33.4646	1120	44.0945	200	7.8740	5.0	0.196	878	34.57	918	36.14	1046	41.15	1092	42.99
239/900CAME4	900	35.4331	1180	46.4567	206	8.1102	5.0	0.196	928	36.54	971	38.23	1103	43.43	1152	45.35
239/950CAME4	950	37.4016	1250	49.2126	224	8.8189	6.0	0.236	986	38.82	1032	40.63	1169	45.99	1214	47.80
239/1000CAME4	1000	39.3701	1320	51.9685	236	9.2913	6.0	0.236	1036	40.79	1088	42.82	1229	48.39	1284	50.55
239/1060CAME4	1060	41.7323	1400	55.1181	250	9.8425	6.0	0.236	1096	43.15	1146	45.12	1302	51.26	1364	53.70
239/1120CAME4	1120	44.0945	1460	57.4803	250	9.8425	6.0	0.236	1156	45.51	1213	47.76	1365	53.73	1424	56.06
239/1180CAME4	1180	46.4567	1540	60.6299	272	10.7087	6.0	0.236	1215	47.87	1273	50.11	1434	56.46	1504	59.21
239/1250CAME4	1250	49.2126	1630	64.1732	280	11.0236	6.0	0.236	1286	50.63	1352	53.21	1526	60.08	1594	62.76
239/1400CAME4	1400	55.1181	1820	71.6535	315	12.4016	8.0	0.314	1444	56.85	1513	59.58	1703	67.04	1776	69.92

*Maximum fillet which corner radius of bearing will clear.

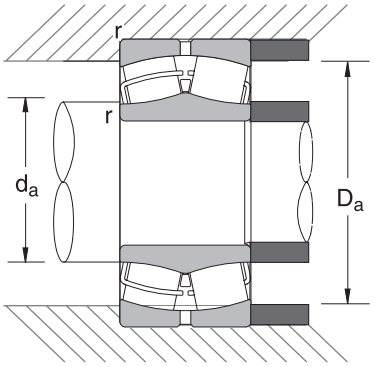

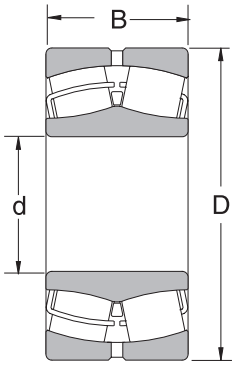

COMMON OPTIONS	
TL	Tough & Long Life
HTF	High Tough
STF	Super Tough
CAM	One Piece Brass Cage
C,CD	Two Piece Steel Cage
EA	High Capacity Steel Cage
H	Two Piece Polyamide Cage
K	1:12 Tapered Bore
G3	Inner Ring Carburized
E4	Lube Groove/Holes, Outer Ring
CO*	Normal Internal Clearance
C2	Tight Internal Clearance
C3	Greater than Normal Internal Clearance
P55	High Running Accuracy Both Rings
S11	Heat Stabilized to 200°C
VE	Vibrating Equipment

*Not shown in part number
See page D-1 for additional options.

Bearing Number	Basic Load Ratings				Limiting Speeds (RPM)		Bearing Weight (Approx.)	
	C_r		C_{or}					
	N	lbs	N	lbs	Grease	Oil	kg	lbs
239/800CAME4	5600000	1260000	13700000	3100000	220	260	462	1020
239/850CAME4	6100000	1370000	15200000	3400000	190	240	523	1150
239/900CAME4	6600000	1480000	16700000	3750000	180	220	591	1300
239/950CAME4	7600000	1710000	19900000	4500000	160	200	732	1610
239/1000CAME4	8200000	1840000	21700000	4900000	150	190	881	1940
239/1060CAME4	9300000	2090000	24400000	5500000	130	170	1030	2270
239/1120CAME4	9500000	2130000	26000000	5850000	120	150	1100	2430
239/1180CAME4	10600000	2380000	29100000	6550000	110	140	1308	2880
239/1250CAME4	11600000	2600000	31500000	7050000	100	120	1540	3400
239/1400CAME4	14300000	3200000	40500000	9100000	80	100	2140	4720

C_r = Dynamic Radial Load Rating C_{or} = Static Radial Load Rating

SPHERICAL ROLLER BEARINGS: 24000 SERIES

BORE DIAMETER 100 - 420 MM, 3.9370 – 16.5354 INCH

Bearing Number	Nominal Bearing Dimensions						Preferred Shoulder Diameters									
	d		D		B		r**		da				Da			
							max		min		max		min		max	
	mm	inch	mm	inch	mm	inch	mm	inch	mm	inch	mm	inch	mm	inch	mm	inch
24020CE4	100	3.9370	150	5.9055	50	1.9685	1.5	0.059	109	4.29	110	4.33	132	5.20	141	5.55
24022CE4	110	4.3307	170	6.6929	60	2.3622	2.0	0.078	120	4.72	121	4.78	148	5.82	160	6.30
24024CE4	120	4.7244	180	7.0866	60	2.3622	2.0	0.078	130	5.12	131	5.17	158	6.21	170	6.69
24024CAME4*	120	4.7244	180	7.0866	60	2.3622	2.0	0.078	130	5.12	131	5.18	158	6.21	170	6.69
24026CE4	130	5.1181	200	7.8740	69	2.7165	2.0	0.078	140	5.51	143	5.66	175	6.87	190	7.48
24026CAME4*	130	5.1181	200	7.8740	69	2.7165	2.0	0.078	140	5.51	143	5.66	175	6.87	190	7.48
24028CE4	140	5.5118	210	8.2677	69	2.7165	2.0	0.078	150	5.91	154	6.07	186	7.29	200	7.87
24028CAME4*	140	5.5118	210	8.2677	69	2.7165	2.0	0.078	150	5.91	153	6.05	186	7.29	200	7.87
24030CE4	150	5.9055	225	8.8583	75	2.9528	2.0	0.078	162	6.38	165	6.52	198	7.80	213	8.39
24030CAME4*	150	5.9055	225	8.8583	75	2.9528	2.0	0.078	162	6.38	165	6.53	198	7.80	213	8.39
24032CE4	160	6.2992	240	9.4488	80	3.1496	2.0	0.078	172	6.77	177	6.97	212	8.33	228	8.98
24032CAME4*	160	6.2992	240	9.4488	80	3.1496	2.0	0.078	172	6.77	177	6.98	212	8.33	228	8.98
24034CE4	170	6.6929	260	10.2362	90	3.5433	2.0	0.078	182	7.17	188	7.43	228	8.95	248	9.76
24034CAME4*	170	6.6929	260	10.2362	90	3.5433	2.0	0.078	182	7.17	188	7.44	228	8.95	248	9.76
24036CE4	180	7.0866	280	11.0236	100	3.9370	2.0	0.078	192	7.56	200	7.88	245	9.63	268	10.55
24036CAME4*	180	7.0866	280	11.0236	100	3.9370	2.0	0.078	192	7.56	200	7.90	245	9.63	268	10.55
24038CE4	190	7.4803	290	11.4173	100	3.9370	2.0	0.078	202	7.95	210	8.29	253	9.95	278	10.94
24038CAME4*	190	7.4803	290	11.4173	100	3.9370	2.0	0.078	202	7.95	210	8.28	253	9.95	278	10.94
24040CE4	200	7.8740	310	12.2047	109	4.2913	2.0	0.078	212	8.35	223	8.78	271	10.66	298	11.73
24040CAME4*	200	7.8740	310	12.2047	109	4.2913	2.0	0.078	212	8.35	223	8.79	271	10.66	298	11.73
24044CE4	220	8.6614	340	13.3858	118	4.6457	2.5	0.098	234	9.21	244	9.63	296	11.65	326	12.83
24044CAME4*	220	8.6614	340	13.3858	118	4.6457	2.5	0.098	234	9.21	244	9.64	296	11.65	326	12.83
24048CE4	240	9.4488	360	14.1732	118	4.6457	2.5	0.098	254	10.00	265	10.45	317	12.49	346	13.62
24048CAME4*	240	9.4488	360	14.1732	118	4.6457	2.5	0.098	254	10.00	265	10.45	317	12.49	346	13.62
24052CAME4*	260	10.2362	400	15.7480	140	5.5118	3.0	0.118	278	10.94	287	11.32	348	13.70	382	15.04
24056CAME4*	280	11.0236	420	16.5354	140	5.5118	3.0	0.118	298	11.73	309	12.17	369	14.50	402	15.83
24060CAME4*	300	11.8110	460	18.1102	160	6.2992	3.0	0.118	318	12.52	332	13.08	400	15.75	442	17.40
24064CAME4*	320	12.5984	480	18.8976	160	6.2992	3.0	0.118	338	13.31	353	13.90	422	16.60	462	18.19
24068CAME4*	340	13.3858	520	20.4724	180	7.0866	4.0	0.157	362	14.25	378	14.90	454	17.87	498	19.61
24072CAME4*	360	14.1732	540	21.2598	180	7.0866	4.0	0.157	382	15.04	397	15.67	476	18.73	518	20.39
24076CAME4*	380	14.9606	560	22.0472	180	7.0866	4.0	0.157	402	15.83	418	16.46	496	19.51	538	21.18
24080CAME4*	400	15.7480	600	23.6220	200	7.8740	4.0	0.157	422	16.61	440	17.33	527	20.72	578	22.76
24084CAME4	420	16.5354	620	24.4094	200	7.8740	4.0	0.157	442	17.40	461	18.18	549	21.58	598	23.54

*Indicates NSK (HPS) High Performance Standard bearing. **Maximum fillet which corner radius of bearing will clear.

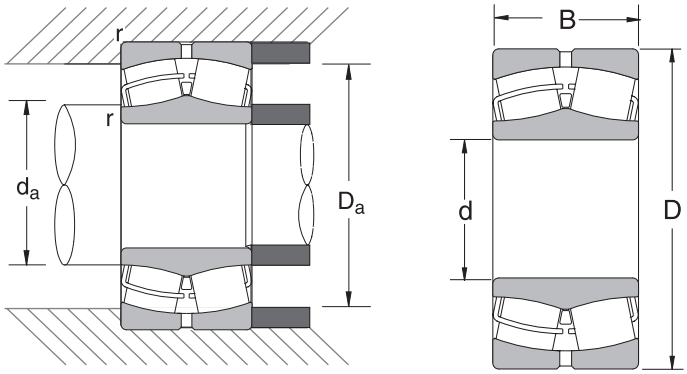

COMMON OPTIONS	
TL	Tough & Long Life
HTF	High Tough
STF	Super Tough
CAM	One Piece Brass Cage
C,CD	Two Piece Steel Cage
EA	High Capacity Steel Cage
H	Two Piece Polyamide Cage
K30	1:30 Tapered Bore
G3	Inner Ring Carburized
E4	Lube Groove/Holes, Outer Ring
CO*	Normal Internal Clearance
C2	Tight Internal Clearance
C3	Greater than Normal Internal Clearance
P55	High Running Accuracy Both Rings
S11	Heat Stabilized to 200°C
VE	Vibrating Equipment

*Not shown in part number
See page D-1 for additional options.

Bearing Number	Basic Load Ratings				Limiting Speeds (RPM)		Bearing Weight (Approx.)	
	C_r		C_{or}					
	N	lbs	N	lbs	Grease	Oil	kg	lbs
24020CE4	276000	62000	470000	106000	1800	2400	3.08	6.79
24022CE4	380000	85000	645000	145000	1600	2200	4.96	10.9
24024CE4	395000	89500	705000	158000	1500	2000	5.33	11.8
24024CAME4*	480000	108000	680000	152000	1500	2000	5.30	11.7
24026CE4	495000	111000	865000	194000	1400	1800	7.84	17.3
24026CAME4*	620000	139000	865000	194000	1400	1800	7.82	17.2
24028CE4	525000	117000	945000	213000	1300	1700	8.37	18.5
24028CAME4*	635000	142000	905000	204000	1300	1700	8.32	18.3
24030CE4	590000	133000	1090000	245000	1200	1500	10.5	23.1
24030CAME4*	740000	166000	1090000	245000	1200	1500	10.4	23.0
24032CE4	680000	152000	1260000	283000	1100	1400	12.7	28.0
24032CAME4*	845000	190000	1260000	283000	1100	1400	12.6	27.8
24034CE4	825000	185000	1520000	340000	1000	1300	17.3	38.1
24034CAME4*	1030000	231000	1520000	340000	1000	1300	17.1	37.8
24036CE4	965000	217000	1750000	395000	950	1200	22.7	50.0
24036CAME4*	1210000	272000	1750000	395000	950	1200	22.5	49.6
24038CE4	975000	219000	1840000	415000	900	1200	24.0	52.9
24038CAME4*	1220000	274000	1840000	415000	900	1200	23.8	52.6
24040CE4	1140000	256000	2120000	475000	850	1100	30.4	67.0
24040CAME4*	1420000	320000	2120000	475000	850	1100	30.2	66.5
24044CE4	1360000	305000	2600000	585000	750	1000	40.5	89.3
24044CAME4*	1640000	370000	2490000	560000	750	1000	39.1	86.1
24048CE4	1390000	310000	2730000	615000	710	950	43.4	95.7
24048CAME4*	1730000	390000	2730000	615000	710	950	42.2	93.0
24052CAME4*	2270000	510000	3500000	790000	630	850	62.6	138
24056CAME4*	2350000	528000	3800000	855000	600	800	66.4	146
24060CAME4*	2890000	649000	4600000	1040000	530	710	93.6	206
24064CAME4*	3050000	685000	5050000	1130000	500	670	99.7	220
24068CAME4*	3650000	820000	6050000	1360000	480	600	135	298
24072CAME4*	3650000	820000	6100000	1370000	450	600	139	306
24076CAME4*	3850000	865000	6600000	1480000	430	560	148	326
24080CAME4*	4500000	1010000	7600000	1710000	400	500	193	425
24084CAME4	3750000	840000	8100000	1820000	380	480	199	439

C_r = Dynamic Radial Load Rating C_{or} = Static Radial Load Rating
*Indicates NSK (HPS) High Performance Standard bearing.

SPHERICAL ROLLER BEARINGS: 24000 SERIES (CONT.)

BORE DIAMETER 440 - 1400 MM, 17.3228 – 55.1181 INCH

Bearing Number	Nominal Bearing Dimensions						Preferred Shoulder Diameters									
	d		D		B		r*		da				Da			
							max		min		max		min		max	
	mm	inch	mm	inch	mm	inch	mm	inch	mm	inch	mm	inch	mm	inch	mm	inch
24088CAME4	440	17.3228	650	25.5906	212	8.3465	5.0	0.196	468	18.43	484	19.07	576	22.68	622	24.49
24092CAME4	460	18.1102	680	26.7717	218	8.5827	5.0	0.196	488	19.21	508	20.01	604	23.78	652	25.67
24096CAME4	480	18.8976	700	27.5591	218	8.5827	5.0	0.196	508	20.00	526	20.71	625	24.61	672	26.46
240/500CAME4	500	19.6850	720	28.3465	218	8.5827	5.0	0.196	528	20.79	544	21.42	643	25.31	692	27.24
240/530CAME4	530	20.8661	780	30.7087	250	9.8425	5.0	0.196	558	21.97	579	22.83	690	27.17	752	29.61
240/560CAME4	560	22.0472	820	32.2835	258	10.1575	5.0	0.196	588	23.15	614	24.18	729	28.70	792	31.18
240/600CAME4	600	23.6220	870	34.2520	272	10.7087	5.0	0.196	628	24.72	653	25.72	772	30.39	842	33.15
240/630CAME4	630	24.8031	920	36.2205	290	11.4173	6.0	0.236	666	26.22	690	27.19	815	32.09	884	34.80
240/670CAME4	670	26.3780	980	38.5827	308	12.1260	6.0	0.236	706	27.80	731	28.80	868	34.17	944	37.17
240/710CAME4	710	27.9528	1030	40.5512	315	12.4016	6.0	0.236	746	29.37	774	30.50	916	36.06	994	39.13
240/800CAME4	800	31.4961	1150	45.2756	345	13.5827	6.0	0.236	836	32.91	875	34.45	1029	40.51	1114	43.86
240/850CAME4	850	33.4646	1220	48.0315	365	14.3701	6.0	0.236	886	34.88	930	36.64	1093	43.03	1184	46.61
240/950CAME4	950	37.4016	1360	53.5433	412	16.2205	6.0	0.236	986	38.82	1037	40.85	1219	47.99	1324	52.13
240/1000CAME4	1000	39.3701	1420	55.9055	412	16.2205	6.0	0.236	1036	40.79	1088	42.84	1275	50.20	1384	54.49
240/1120CAME4	1120	44.0945	1580	62.2047	462	18.1890	8.0	0.314	1164	45.83	1222	48.14	1421	55.94	1536	60.47
240/1250CAME4	1250	49.2126	1750	68.8976	500	19.6850	8.0	0.314	1294	50.94	1380	54.35	1579	62.17	1706	67.17
240/1320CAME4	1320	51.9685	1850	72.8346	530	20.8661	10.0	0.393	1374	54.09	1451	57.16	1656	65.20	1796	70.71
240/1400CAME4	1400	55.1181	1950	76.7717	545	21.4567	10.0	0.393	1454	57.24	1518	59.77	1767	69.57	1896	74.65

*Maximum fillet which corner radius of bearing will clear.

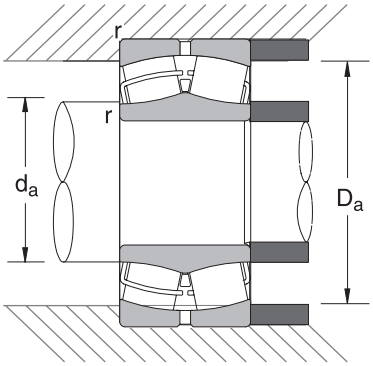

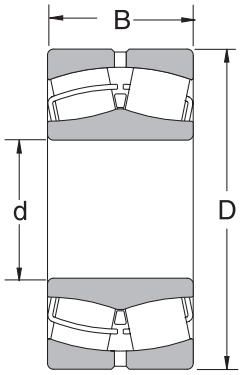

COMMON OPTIONS	
TL	Tough & Long Life
HTF	High Tough
STF	Super Tough
CAM	One Piece Brass Cage
C,CD	Two Piece Steel Cage
EA	High Capacity Steel Cage
H	Two Piece Polyamide Cage
K30	1:30 Tapered Bore
G3	Inner Ring Carburized
E4	Lube Groove/Holes, Outer Ring
CO*	Normal Internal Clearance
C2	Tight Internal Clearance
C3	Greater than Normal Internal Clearance
P55	High Running Accuracy Both Rings
S11	Heat Stabilized to 200°C
VE	Vibrating Equipment

*Not shown in part number
See page D-1 for additional options.

Bearing Number	Basic Load Ratings				Limiting Speeds (RPM)		Bearing Weight (Approx.)	
	C_r		C_{or}					
	N	lbs	N	lbs	Grease	Oil	kg	lbs
24088CAME4	4150000	940000	9100000	2050000	360	450	237	522
24092CAME4	4500000	1010000	9950000	2240000	340	430	266	586
24096CAME4	4600000	1040000	10200000	2290000	320	430	270	595
240/500CAME4	4450000	995000	9900000	2220000	300	400	276	608
240/530CAME4	5400000	1210000	11800000	2660000	280	360	390	860
240/560CAME4	5950000	1340000	13300000	3000000	260	340	440	970
240/600CAME4	6600000	1480000	15100000	3400000	240	320	529	1170
240/630CAME4	7550000	1700000	17700000	4000000	220	300	637	1400
240/670CAME4	8450000	1900000	19500000	4400000	200	260	773	1700
240/710CAME4	8850000	1990000	20700000	4650000	190	240	861	1900
240/800CAME4	10900000	2440000	26300000	5900000	160	200	1130	2490
240/850CAME4	11600000	2610000	28300000	6350000	150	190	1350	2980
240/950CAME4	14500000	3250000	36500000	8150000	120	160	1880	4140
240/1000CAME4	15300000	3450000	38500000	8700000	110	150	2010	4430
240/1120CAME4	18700000	4200000	49500000	11100000	95	120	2790	6150
240/1250CAME4	21000000	4700000	59500000	13400000	75	100	3700	8160
240/1320CAME4	22600000	5100000	63500000	14300000	67	85	4400	9700
240/1400CAME4	24500000	5500000	65000000	14600000	60	75	4900	10800

C_r = Dynamic Radial Load Rating C_{or} = Static Radial Load Rating

SPHERICAL ROLLER BEARINGS: 24100 SERIES

BORE DIAMETER 100 - 320 MM, 3.9370 – 12.5984 INCH

Bearing Number	Nominal Bearing Dimensions						Preferred Shoulder Diameters									
	d		D		B		r**		da				Da			
							max		min		max		min		max	
	mm	inch	mm	inch	mm	inch	mm	inch	mm	inch	mm	inch	mm	inch	mm	inch
24120CAME4	100	3.9370	165	6.4961	65	2.5591	2.0	0.078	110	4.33	114	4.49	143	5.63	155	6.10
24122CE4	110	4.3307	180	7.0866	69	2.7165	2.0	0.078	120	4.72	123	4.84	154	6.06	170	6.69
24122CAME4*	110	4.3307	180	7.0866	69	2.7165	2.0	0.078	120	4.72	123	4.84	154	6.06	170	6.69
24124CE4	120	4.7244	200	7.8740	80	3.1496	2.0	0.078	130	5.12	136	5.35	171	6.73	190	7.48
24124CAME4*	120	4.7244	200	7.8740	80	3.1496	2.0	0.078	130	5.12	136	5.35	171	6.73	190	7.48
24126CE4	130	5.1181	210	8.2677	80	3.1496	2.0	0.078	140	5.51	146	5.75	180	7.09	200	7.87
24126CAME4*	130	5.1181	210	8.2677	80	3.1496	2.0	0.078	140	5.51	146	5.75	180	7.09	200	7.87
24128CE4	140	5.5118	225	8.8583	85	3.3465	2.0	0.078	152	5.98	156	6.14	193	7.60	213	8.39
24128CAME4*	140	5.5118	225	8.8583	85	3.3465	2.0	0.078	152	5.98	155	6.10	193	7.60	213	8.39
24130CE4	150	5.9055	250	9.8425	100	3.9370	2.0	0.078	162	6.38	169	6.65	212	8.35	238	9.37
24130CAME4*	150	5.9055	250	9.8425	100	3.9370	2.0	0.078	162	6.38	169	6.65	212	8.35	238	9.37
24132CE4	160	6.2992	270	10.6299	109	4.2913	2.0	0.078	172	6.77	179	7.05	229	9.02	258	10.16
24132CAME4*	160	6.2992	270	10.6299	109	4.2913	2.0	0.078	172	6.77	181	7.13	229	9.02	258	10.16
24134CE4	170	6.6929	280	11.0236	109	4.2913	2.0	0.078	182	7.17	190	7.48	239	9.41	268	10.55
24134CAME4*	170	6.6929	280	11.0236	109	4.2913	2.0	0.078	182	7.17	191	7.52	239	9.41	268	10.55
24136CE4	180	7.0866	300	11.8110	118	4.6457	2.5	0.098	194	7.64	202	7.95	255	10.04	286	11.26
24136CAME4*	180	7.0866	300	11.8110	118	4.6457	2.5	0.098	194	7.64	203	7.99	255	10.04	286	11.26
24138CE4	190	7.4803	320	12.5984	128	5.0394	2.5	0.098	204	8.03	211	8.31	269	10.59	306	12.05
24138CAME4*	190	7.4803	320	12.5984	128	5.0394	2.5	0.098	204	8.03	212	8.35	269	10.59	306	12.05
24140CE4	200	7.8740	340	13.3858	140	5.5118	2.5	0.098	214	8.43	226	8.90	290	11.42	326	12.83
24140CAME4*	200	7.8740	340	13.3858	140	5.5118	2.5	0.098	214	8.43	226	8.90	290	11.42	326	12.83
24144CE4	220	8.6614	370	14.5669	150	5.9055	3.0	0.118	238	9.37	248	9.76	313	12.32	352	13.86
24144CAME4*	220	8.6614	370	14.5669	150	5.9055	3.0	0.118	238	9.37	249	9.80	313	12.32	352	13.86
24148CE4	240	9.4488	400	15.7480	160	6.2992	3.0	0.118	258	10.16	268	10.55	341	13.43	382	15.04
24148CAME4*	240	9.4488	400	15.7480	160	6.2992	3.0	0.118	258	10.16	269	10.59	341	13.43	382	15.04
24152CE4	260	10.2362	440	17.3228	180	7.0866	3.0	0.118	278	10.94	294	11.57	371	14.61	422	16.61
24152CAME4*	260	10.2362	440	17.3228	180	7.0866	3.0	0.118	278	10.94	295	11.61	371	14.61	422	16.61
24156CXE4	280	11.0236	460	18.1102	180	7.0866	4.0	0.157	302	11.89	314	12.36	392	15.43	438	17.24
24156CAME4*	280	11.0236	460	18.1102	180	7.0866	4.0	0.157	302	11.89	315	12.40	392	15.43	438	17.24
24160CXE4	300	11.8110	500	19.6850	200	7.8740	4.0	0.157	322	12.68	337	13.27	423	16.65	478	18.82
24160CAME4*	300	11.8110	500	19.6850	200	7.8740	4.0	0.157	322	12.68	338	13.31	423	16.65	478	18.82
24164CXE4	320	12.5984	540	21.2598	218	8.5827	4.0	0.157	342	13.46	362	14.25	456	17.95	518	20.39
24164CAME4*	320	12.5984	540	21.2598	218	8.5827	4.0	0.157	342	13.46	363	14.29	456	17.95	518	20.39

*Indicates NSK (HPS) High Performance Standard bearing. **Maximum fillet which corner radius of bearing will clear.

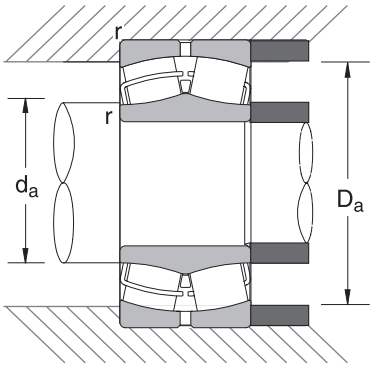

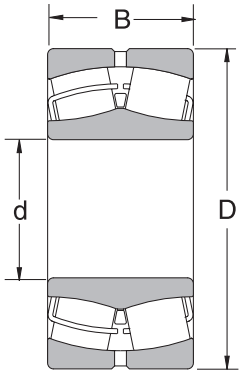

COMMON OPTIONS	
TL	Tough & Long Life
HTF	High Tough
STF	Super Tough
CAM	One Piece Brass Cage
C,CD	Two Piece Steel Cage
EA	High Capacity Steel Cage
H	Two Piece Polyamide Cage
K30	1:30 Tapered Bore
G3	Inner Ring Carburized
E4	Lube Groove/Holes, Outer Ring
CO*	Normal Internal Clearance
C2	Tight Internal Clearance
C3	Greater than Normal Internal Clearance
P55	High Running Accuracy Both Rings
S11	Heat Stabilized to 200°C
VE	Vibrating Equipment

*Not shown in part number
See page D-1 for additional options.

Bearing Number	Basic Load Ratings				Limiting Speeds (RPM)		Bearing Weight (Approx.)	
	C_r		C_{or}					
	N	lbs	N	lbs	Grease	Oil	kg	lbs
24120CAME4	345000	77500	535000	121000	1700	2200	5.42	11.9
24122CE4	460000	103000	750000	168000	1600	2000	6.84	15.1
24122CAME4*	575000	129000	750000	168000	1600	2000	6.76	14.9
24124CE4	575000	129000	950000	213000	1400	1800	10.0	22.0
24124CAME4*	695000	156000	905000	203000	1400	1800	9.86	21.7
24126CE4	590000	133000	1010000	228000	1300	1700	10.7	23.6
24126CAME4*	735000	165000	1010000	227000	1300	1700	10.6	23.4
24128CE4	670000	151000	1160000	261000	1200	1600	13.0	28.7
24128CAME4*	835000	188000	1160000	260000	1200	1600	12.9	28.4
24130CE4	890000	200000	1530000	345000	1100	1400	19.8	43.7
24130CAME4*	1070000	241000	1450000	325000	1100	1400	19.3	42.5
24132CE4	1040000	234000	1760000	395000	1000	1300	25.4	56.0
24132CAME4*	1240000	278000	1670000	375000	1000	1300	25.0	55.1
24134CE4	1080000	242000	1860000	420000	1000	1300	26.6	58.6
24134CAME4*	1280000	287000	1770000	400000	1000	1300	26.4	58.2
24136CE4	1190000	268000	2040000	460000	900	1200	33.1	73.0
24136CAME4*	1490000	335000	2040000	460000	900	1200	33.0	72.8
24138CE4	1370000	310000	2330000	525000	850	1100	41.5	91.5
24138CAME4*	1710000	385000	2330000	525000	850	1100	40.9	90.2
24140CE4	1570000	350000	2670000	600000	800	1000	51.3	113
24140CAME4*	1960000	440000	2660000	600000	800	1000	50.8	112
24144CE4	1800000	405000	3200000	720000	710	950	66.7	147
24144CAME4*	2250000	505000	3200000	720000	710	950	63.9	141
24148CE4	2130000	480000	3800000	850000	670	850	79.5	175
24148CAME4*	2660000	600000	3800000	850000	670	850	79.6	175
24152CE4	2560000	575000	4700000	1050000	600	800	110	243
24152CAME4*	3200000	719000	4700000	1050000	600	800	109	240
24156CXE4	2450000	550000	4500000	1010000	560	750	113	249
24156CAME4*	3300000	741000	5000000	1120000	560	750	115	254
24160CXE4	2980000	670000	5500000	1240000	500	670	154	340
24160CAME4*	3900000	876000	5800000	1310000	500	670	152	335
24164CXE4	3400000	765000	6300000	1420000	480	600	199	439
24164CAME4*	4400000	988000	6650000	1490000	480	600	196	432

C_r = Dynamic Radial Load Rating C_{or} = Static Radial Load Rating
*Indicates NSK (HPS) High Performance Standard bearing.

SPHERICAL ROLLER BEARINGS: 24100 SERIES (CONT.)

BORE DIAMETER 340 - 670 MM, 13.3858 – 26.3780 INCH

Bearing Number	Nominal Bearing Dimensions						Preferred Shoulder Diameters									
	d		D		B		r*		da				Da			
							max		min		max		min		max	
	mm	inch	mm	inch	mm	inch	mm	inch	mm	inch	mm	inch	mm	inch	mm	inch
24168CXE4	340	13.3858	580	22.8346	243	9.5669	4.0	0.157	362	14.25	384	15.12	489	19.23	558	21.97
24168CAME4*	340	13.3858	580	22.8346	243	9.5669	4.0	0.157	362	14.25	385	15.19	489	19.23	558	21.97
24172CAME4*	360	14.1732	600	23.6220	243	9.5669	4.0	0.157	382	15.04	405	15.95	507	19.95	578	22.76
24176CXE4	380	14.9606	620	24.4094	243	9.5669	4.0	0.157	402	15.83	424	16.69	527	20.71	598	23.54
24176CAME4	380	14.9606	620	24.4094	243	9.5669	4.0	0.157	402	15.83	426	16.77	529	20.80	598	23.54
24180CAME4	400	15.7480	650	25.5906	250	9.8425	5.0	0.196	428	16.85	448	17.65	551	21.69	622	24.49
24184CAME4	420	16.5354	700	27.5591	280	11.0236	5.0	0.196	448	17.64	478	18.84	598	23.51	672	26.46
24188CAME4	440	17.3228	720	28.3465	280	11.0236	5.0	0.196	468	18.43	498	19.64	617	24.27	692	27.24
24192CAME4	460	18.1102	760	29.9213	300	11.8110	6.0	0.236	496	19.53	518	20.40	646	25.43	724	28.50
24196CAME4	480	18.8976	790	31.1024	308	12.1260	6.0	0.236	516	20.31	539	21.25	670	26.38	754	29.69
241/500CAME4	500	19.6850	830	32.6772	325	12.7953	6.0	0.236	536	21.10	559	22.02	703	27.68	794	31.26
241/560CAME4	560	22.0472	920	36.2205	355	13.9764	6.0	0.236	596	23.46	629	24.79	782	30.76	884	34.80
241/600CAME4	600	23.6220	980	38.5827	375	14.7638	6.0	0.236	636	25.04	673	26.53	836	32.88	944	37.17
241/630CAME4	630	24.8031	1030	40.5512	400	15.7480	6.0	0.236	666	26.22	706	27.80	876	34.47	994	39.13
241/670CAME4	670	26.3780	1090	42.9134	412	16.2205	6.0	0.236	706	27.80	754	29.72	934	36.74	1054	41.50

*Maximum fillet which corner radius of bearing will clear.

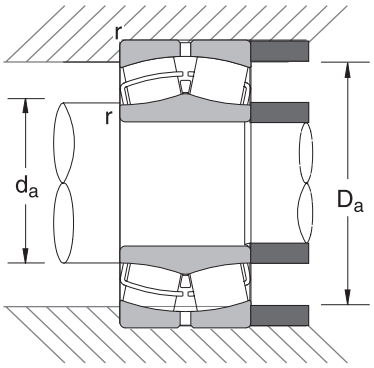

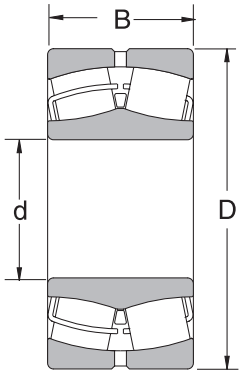

COMMON OPTIONS	
TL	Tough & Long Life
HTF	High Tough
STF	Super Tough
CAM	One Piece Brass Cage
C,CD	Two Piece Steel Cage
EA	High Capacity Steel Cage
H	Two Piece Polyamide Cage
K30	1:30 Tapered Bore
G3	Inner Ring Carburized
E4	Lube Groove/Holes, Outer Ring
CO*	Normal Internal Clearance
C2	Tight Internal Clearance
C3	Greater than Normal Internal Clearance
P55	High Running Accuracy Both Rings
S11	Heat Stabilized to 200°C
VE	Vibrating Equipment

*Not shown in part number
See page D-1 for additional options.

Bearing Number	Basic Load Ratings				Limiting Speeds (RPM)		Bearing Weight (Approx.)	
	C_r		C_{or}					
	N	lbs	N	lbs	Grease	Oil	kg	lbs
24168CXE4	4050000	915000	7500000	1690000	430	560	255	562
24168CAME4*	5300000	1190000	7900000	1780000	430	560	257	567
24172CAME4*	5250000	1170000	8000000	1800000	400	530	264	582
24176CXE4	4200000	945000	8100000	1820000	400	500	278	613
24176CAME4	4350000	975000	8450000	1900000	400	500	275	606
24180CAME4	4950000	1110000	10100000	2260000	380	480	316	697
24184CAME4	6000000	1350000	12000000	2690000	340	450	421	928
24188CAME4	6000000	1340000	12100000	2710000	320	430	433	955
24192CAME4	6300000	1410000	12400000	2800000	300	400	512	1130
24196CAME4	7150000	1610000	14600000	3300000	300	380	567	1250
241/500CAME4	8000000	1800000	16000000	3600000	280	360	666	1470
241/560CAME4	9400000	2120000	19600000	4400000	240	320	886	1950
241/600CAME4	10400000	2340000	21900000	4900000	220	280	1050	2310
241/630CAME4	11300000	2550000	23900000	5400000	200	260	1250	2760
241/670CAME4	12400000	2790000	26500000	5950000	190	240	1440	3170

C_r = Dynamic Radial Load Rating C_{or} = Static Radial Load Rating
*Indicates NSK (HPS) High Performance Standard bearing.

SHAKER SCREEN BEARINGS

Vibrating Equipment Specification
- Higher Precision Bore & OD Tolerances
- Special Radial Internal Clearance Range
- Unique Combination of Geometry & Finishes Optimize Performance

VE: Vibrating Screen Bearing
SBVS/SAVS: Special Dimension Vibrating Screen Bearing

Spherical Bearing — **2**

Bearing Series — **23**

Bore Diameter Number — **20**

Cage Option — **CAM**
CAM: Machined Brass Cage

Oil Groove & Holes in Outer Ring — **E4**

Internal Clearance Specification — **C4**

Vibrating Equipment Specification — **VE**

Material — **TF**
TF: Tough Steel

Please refer to the bearing tables for exact part number options.

RADIAL INTERNAL CLEARANCE (INCHES)

Bearing Bore (mm)	Unmounted				Mounted			
	C3		C4		C3		C4	
	min	max	min	max	min	max	min	max
40	0.0020	0.0024	0.0026	0.0031	0.0006	0.0019	0.0012	0.0026
45-50	0.0024	0.0031	0.0033	0.0039	0.0010	0.0026	0.0019	0.0034
55	0.0029	0.0035	0.0039	0.0047	0.0015	0.0030	0.0025	0.0042
60-65	0.0029	0.0035	0.0039	0.0047	0.0012	0.0038	0.0022	0.0040
70	0.0035	0.0043	0.0047	0.0057	0.0018	0.0036	0.0030	0.0050
75-80	0.0035	0.0043	0.0047	0.0057	0.0018	0.0038	0.0030	0.0052
85	0.0043	0.0053	0.0059	0.0071	0.0026	0.0048	0.0042	0.0066
90-100	0.0043	0.0053	0.0059	0.0071	0.0025	0.0048	0.0041	0.0066
110	0.0053	0.0063	0.0070	0.0083	0.0036	0.0058	0.0052	0.0078
120	0.0053	0.0063	0.0070	0.0083	0.0032	0.0055	0.0049	0.0075
130-140	0.0063	0.0075	0.0081	0.0094	0.0042	0.0067	0.0060	0.0086
150-160	0.0075	0.0087	0.0094	0.0110	0.0053	0.0080	0.0072	0.0103
170-180	0.0079	0.0094	0.0104	0.0122	0.0057	0.0087	0.0082	0.0115
190	0.0087	0.0102	0.0113	0.0134	0.0065	0.0095	0.0091	0.0127
200	0.0087	0.0102	0.0113	0.0134	0.0063	0.0094	0.0089	0.0126

INTERCHANGE

	NSK	TORR/TIMKEN	SKF	FAG*
Part Number Interchange	22308CAME4C4VE	22308YMW33W800C4	22308 E/VA405	22308 EAS.MA.T41A
	22309CAME4C4VE	22309YMW33W800C4	22309 E/VA405	22309 EAS.MA.T41A
	22310CAME4C4VE	22310YMW33W800C4	22310 E/VA405	22310 EAS.MA.T41A
	22311CAME4C4VE	22311YMW33W800C4	22311 E/VA405	22311 EAS.MA.T41A
	22312CAME4C4VE	22312YMW33W800C4	22312 E/VA405	22312 EAS.MA.T41A
	22313CAME4C4VE	22313YMW33W800C4	22313 E/VA405	22313 EAS.MA.T41A
	22314CAME4C4VE	22314YMW33W800C4	22314 E/VA405	22314 EAS.MA.T41A
	22315CAME4C4VE	22315YMW33W800C4	22315 EJA/VA405	22315 EAS.MA.T41A
	22316CAME4C4VE	22316YMW33W800C4	22316 EJA/VA405	22316 EAS.MA.T41A
	22317CAME4C4VE	22317YMW33W800C4	22317 EJA/VA405	22317 EAS.MA.T41A
	22318CAME4C4VE	22318YMW33W800C4	22318 EJA/VA405	22318 EAS.MA.T41A
	22319CAME4C4VE	22319YMW33W800C4	22319 EJA/VA405	22319 EAS.MA.T41A
	22319CAMC4VE	22319YMW800C4	-	-
	22320CAME4C4VE	22320YMW33W800C4	22320 EJA/VA405	22320 EAS.MA.T41A
	22322CAME4C4VE	22322YMW33W800C4	22322 EJA/VA405	22322 EAS.MA.T41A
	22322CAME4CG195SBVS	22322YMW47W22C3	22322 EJA/VA414	22322 EAS.MA.T41B
	22324CAME4C4VE	22324YMW33W800C4	22324 CCJA/W33VA405	22324 EAS.MA.T41A
	22326CAME4C4VE	22326YMW33W800C4	22326 CCJA/W33VA405	22326 EAS.MA.T41A
	22328CAME4C4VE	22328YMW33W800C4	22328 CCJA/W33VA405	22328 EAS.MA.T41A
	22330CAME4C4VE	22330YMW33W800C4	22330 CCJA/W33VA405	22330 EAS.MA.T41A
	22332CAME4C4VE	22332YMW33W800C4	22332 CCJA/W33VA405	22332 A.MA.T41A
	22334CAME4C4VE	22334YMBW33W800C4	22334 CCJA/W33VA405	22334 A.MA.T41A
	22336CAME4C4VE	22336YMBW33W800C4	22336 CCJA/W33VA405	22336 A.MA.T41A
	22338CAME4C4VE	22338YMBW33W800C4	22338 CCJA/W33VA405	22338 A.MA.T41A
	22340CAME4C4VE	22340 YMBW33W45AW800C4	22340 CCJA/W33VA405	22340 A.MA.T41A
	23322CAME4C4VE	23322W33W800C4	453322 EJA/VA405	23322 AS.MA.T41A
	23322CAMC4VE	23322 YM W800 C4	-	532689.C3.F80
	23324CAME4C4VE	23324YMW33W800C4	453324 CCJA/W33VA405	23324 AS.MA.T41A
	23324CAMC4VE	23324YMW800C4	-	-
	23326CAME4C4VE	23326YMW33W800C4	453326 CCJA/W33VA405	23326 AS.MA.T41A
	23328CAME4C4VE	23328YMW33W800C4	453328 CCJA/W33VA405	23328 AS.MA.T41A
	23328CAMC4VE	23328YMW800C4	-	-
	23330CAME4C4VE	23330YMBW33W800C4	453330 CCJA/W33VA405	23330 A.MA.T41A
	23332CAME4C4VE	23332YMBW33W800C4	453332 CCJA/W33VA405	23332 A.MA.T41A
	23332CAMC4VE	23332YMBW800C4	-	-
	23332CAME4C4SBVS	23332YMBW33W47W22C4	453332 CCJA/W33VA414	23332 EAS.MA.T41B
	23338CAME4C4VE	23338YMBW33W22BRC4	453338 CCJA/W33VA405	23338ASMAC4F80
	23340CAME4C4VE	-	453340 CCJA/W33VA405	-

Nomenclature Interchange	Shaker Screen Specification	VE	W800	VA405	T41A
	Durotect Bore Coating	-	-	-	T41D
	Standard Series	223	223	223 or 452	223
	Wide Series	233	233	453	233
	Allis Chalmers Oversized Bore	Sa, Sb	W47	VA414	T41B
	PTFE Coating On Bore	-	-	VA406	-
	Cedar Rapids Undersized Bore	See tables on pages D-41 thru D-42	W810	-	5XXX.F80

* NSK bearings with "CAME4C4VE" suffix may also be used in place of bearings with FAG suffix "T41A" and "T41".

The competitive manufacturers are provided for a convenient source of unit substitution. They can be considered interchangeable in most instances, but for special applications, please consult NSK Engineering. NSK assumes no liability with respect to errors or omissions.

SHAKER SCREEN BEARINGS: 22300/23300 SERIES

Bearing Number	Bearing Dimensions						CAM Design			
	Bore		O.D.		Width		Capacity C_r		Limiting Speeds (RPM)	
	mm	inch	mm	inch	mm	inch	N	lbs	Grease	Oil
223 SERIES										
22308	40	1.5748	90	3.5433	33	1.2992	152000	34000	4300	5300
22309	45	1.7717	100	3.9370	36	1.4173	185000	41000	3800	4800
22310	50	1.9685	110	4.3307	40	1.5748	232000	52000	3600	4300
22311	55	2.1654	120	4.7244	43	1.6929	261000	58000	3200	4000
22312	60	2.3622	130	5.1181	46	1.8110	305000	68000	3000	3600
22313	65	2.5591	140	5.5118	48	1.8898	330000	73000	2800	3400
22314	70	2.7559	150	5.9055	51	2.0079	380000	84000	2600	3200
22315	75	2.9528	160	6.2992	55	2.1654	425000	94000	2400	3000
22316	80	3.1496	170	6.6929	58	2.2835	485000	108000	2200	2800
22317	85	3.3465	180	7.0866	60	2.3622	520000	116000	2000	2600
22318	90	3.5433	190	7.4803	64	2.5197	605000	134000	2000	2400
22319	95	3.7402	200	7.8740	67	2.6378	655000	146000	1900	2400
22320	100	3.9370	215	8.4646	73	2.8740	750000	167000	1700	2200
22322	110	4.3307	240	9.4488	80	3.1496	925000	206000	1600	1900
22324	120	4.7244	260	10.2362	86	3.3858	1060000	236000	1400	1800
22326	130	5.1181	280	11.0236	93	3.6614	1240000	276000	1300	1600
22328	140	5.5118	300	11.8110	102	4.0157	1450000	322000	1200	1500
22330	150	5.9055	320	12.5984	108	4.2520	1530000	340000	1100	1400
22332	160	6.2992	340	13.3858	114	4.4882	1700000	378000	1100	1300
22334	170	6.6929	360	14.1732	120	4.7244	1970000	438000	1000	1200
22336	180	7.0866	380	14.9606	126	4.9606	2170000	482000	950	1200
22338	190	7.4803	400	15.7480	132	5.1969	2370000	527000	900	1100
233 SERIES										
23322	110	4.3307	240	9.4488	92.1	3.6260	975000	219000	1700	2200
23324	120	4.7244	260	10.2362	106	4.1732	1200000	269000	1500	1900
23326	130	5.1181	280	11.0236	112	4.4094	1300000	291000	1400	1800
23328	140	5.5118	300	11.8110	118	4.6457	1550000	350000	1300	1700
23330	150	5.9055	320	12.5984	128	5.0394	1750000	395000	1200	1500
23332	160	6.2992	340	13.3858	136	5.3543	1940000	435000	1100	1400
23338	190	7.4803	400	15.7480	155	6.1024	2080000	462000	950	1200
23340	200	7.8740	420	16.5354	165	6.4961	2340000	520000	900	1100
23344	220	8.6614	460	18.1102	180	7.0866	2800000	622000	800	1000
SPECIAL CEDAR RAPIDS SERIES										
100SL2461	100	3.9370	240	9.4488	92.1	3.6260	975000	219000	1700	2200
120SL2861	120	4.7244	280	11.0236	112	4.4094	1300000	291000	1400	1800
130SL2961	130	5.1181	293	11.5354	112	4.4094	1300000	291000	1400	1800

SHAKER SCREEN BEARINGS: 22300/23300 SERIES

FITTING RECOMMENDATIONS

Bearing Number	Shaft Diameter						Housing Bore Diameter					
	max		min		fit		min		max		fit	
	mm	inch	mm	inch	mm	inch	mm	inch	mm	inch	mm	inch
223 SERIES												
22308	39.991	1.5744	39.975	1.5738	0.002L-0.025L	0.0001L-0.0010L	89.962	3.5418	89.984	3.5427	0.003T-0.033T	0.0001T-0.0013T
22309	44.991	1.7713	44.975	1.7707	0.002L-0.025L	0.0001L-0.0010L	99.962	3.9355	99.984	3.9364	0.003T-0.033T	0.0001T-0.0013T
22310	49.991	1.9681	49.975	1.9675	0.002L-0.025L	0.0001L-0.0010L	109.962	4.3292	109.984	4.3301	0.003T-0.033T	0.0001T-0.0013T
22311	54.990	2.1650	54.971	2.1642	0.001L-0.029L	0.0000L-0.0012L	119.962	4.7229	119.984	4.7238	0.003T-0.033T	0.0001T-0.0013T
22312	59.990	2.3618	59.971	2.3611	0.001L-0.029L	0.0001L-0.0011L	129.955	5.1163	129.980	5.1173	0.007T-0.040T	0.0003T-0.0016T
22313	64.990	2.5587	64.971	2.5579	0.001L-0.029L	0.0000L-0.0012L	139.955	5.5100	139.980	5.5110	0.007T-0.040T	0.0003T-0.0016T
22314	69.990	2.7555	69.971	2.7548	0.001L-0.029L	0.0001L-0.0011L	149.955	5.9037	149.980	5.9047	0.007T-0.040T	0.0003T-0.0016T
22315	74.990	2.9524	74.971	2.9516	0.001L-0.029L	0.0000L-0.0012L	159.939	6.2968	159.964	6.2978	0.018T-0.056T	0.0007T-0.0022T
22316	79.990	3.1492	79.971	3.1485	0.001L-0.029L	0.0001L-0.0011L	169.939	6.6905	169.964	6.6915	0.018T-0.056T	0.0007T-0.0022T
22317	84.988	3.3460	84.966	3.3451	0.000L-0.034L	0.0000L-0.0014L	179.939	7.0842	179.964	7.0852	0.018T-0.056T	0.0007T-0.0022T
22318	89.988	3.5428	89.966	3.5420	0.000L-0.034L	0.0000L-0.0013L	189.930	7.4776	189.959	7.4787	0.018T-0.060T	0.0007T-0.0023T
22319	94.988	3.7397	94.966	3.7388	0.000L-0.034L	0.0000L-0.0014L	199.930	7.8713	199.959	7.8724	0.018T-0.060T	0.0007T-0.0023T
22320	99.988	3.9365	99.966	3.9357	0.000L-0.034L	0.0000L-0.0013L	214.930	8.4618	214.959	8.4630	0.018T-0.060T	0.0007T-0.0024T
22322	109.988	4.3302	109.966	4.3294	0.000L-0.034L	0.0000L-0.0013L	239.930	9.4461	239.959	9.4472	0.018T-0.060T	0.0007T-0.0023T
22324	119.988	4.7239	119.966	4.7231	0.000L-0.034L	0.0000L-0.0013L	259.921	10.2331	259.953	10.2344	0.024T-0.069T	0.0009T-0.0027T
22326	129.957	5.1164	129.932	5.1154	0.028L-0.068L	0.0011L-0.0027L	279.921	11.0205	279.953	11.0218	0.024T-0.069T	0.0009T-0.0027T
22328	139.957	5.5101	139.932	5.5091	0.028L-0.068L	0.0011L-0.0027L	299.921	11.8079	299.953	11.8092	0.024T-0.069T	0.0009T-0.0027T
22330	149.957	5.9038	149.932	5.9028	0.028L-0.068L	0.0011L-0.0027L	319.913	12.5950	319.949	12.5964	0.023T-0.074T	0.0009T-0.0029T
22332	159.957	6.2975	159.932	6.2965	0.028L-0.068L	0.0011L-0.0027L	339.913	13.3824	339.949	13.3838	0.023T-0.074T	0.0009T-0.0029T
22334	169.957	6.6912	169.932	6.6902	0.028L-0.068L	0.0011L-0.0027L	359.913	14.1698	359.949	14.1712	0.023T-0.074T	0.0009T-0.0029T
22336	179.957	7.0849	179.932	7.0839	0.028L-0.068L	0.0011L-0.0027L	379.913	14.9572	379.949	14.9586	0.023T-0.074T	0.0009T-0.0029T
22338	189.950	7.4783	189.921	7.4772	0.032L-0.079L	0.0013L-0.0031L	399.913	15.7446	399.949	15.7460	0.023T-0.074T	0.0009T-0.0029T
233 SERIES												
23322	109.988	4.3302	109.966	4.3294	0.000L-0.034L	0.0000L-0.0013L	239.930	9.4461	239.959	9.4472	0.018T-0.060T	0.0007T-0.0023T
23324	119.988	4.7239	119.966	4.7231	0.000L-0.034L	0.0000L-0.0013L	259.921	10.2331	259.953	10.2344	0.024T-0.069T	0.0009T-0.0027T
23326	129.957	5.1164	129.932	5.1154	0.028L-0.068L	0.0011L-0.0027L	279.921	11.0205	279.953	11.0218	0.024T-0.069T	0.0009T-0.0027T
23328	139.957	5.5101	139.932	5.5091	0.028L-0.068L	0.0011L-0.0027L	299.921	11.8079	299.953	11.8092	0.024T-0.069T	0.0009T-0.0027T
23330	149.957	5.9038	149.932	5.9028	0.0 28L-0.068L	0.0011L-0.0027L	319.913	12.5950	319.949	12.5964	0.023T-0.074T	0.0009T-0.0029T
23332	159.957	6.2975	159.932	6.2965	0.028L-0.068L	0.0011L-0.0027L	339.913	13.3824	339.949	13.3838	0.023T-0.074T	0.0009T-0.0029T
23338	189.950	7.4783	189.921	7.4772	0.032L-0.088L	0.0013L-0.0034L	399.913	15.7446	399.949	15.7460	0.023T-0.074T	0.0009T-0.0029T
23340	199.950	7.8720	199.921	7.8709	0.032L-0.088L	0.0013L-0.0034L	419.905	16.5317	419.945	16.5333	0.025T-0.082T	0.0010T-0.0032T
23344	219.950	8.6594	219.921	8.6583	0.032L-0.088L	0.0013L-0.0034L	459.905	18.1065	459.945	18.1081	0.025T-0.082T	0.0010T-0.0032T
SPECIAL CEDAR RAPIDS SERIES												
100SL2461	99.988	3.9365	99.966	3.9357	0.000L-0.034L	0.0000L-0.0013L	239.930	9.4461	239.959	9.4472	0.018T-0.060T	0.0007T-0.0023T
120SL2861	119.988	4.7239	119.966	4.7231	0.000L-0.034L	0.0000L-0.0013L	279.921	11.0205	279.953	11.0218	0.024T-0.069T	0.0009T-0.0027T
130SL2961	129.957	5.1164	129.932	5.1154	0.028L-0.068L	0.0011L-0.0027L	292.921	11.5323	292.953	11.5336	0.024T-0.069T	0.0009T-0.0027T

TAPERED ROLLER BEARINGS

METRIC TAPERED ROLLER BEARINGS

Nomenclature E-1
Interchange E-2
Applications E-2
30200 Metric Series E-3
30300 Metric Series E-5
31300 Metric Series E-7
32000 Metric Series E-9
32200 Metric Series E-11
32300 Metric Series E-13
32900 Metric Series E-15
33000 Metric Series E-17
33100 Metric Series E-19
33200 Metric Series E-21
30200C Metric Series E-23
30300C Metric Series E-25
32200C Metric Series E-27

INCH TAPERED ROLLER BEARINGS

Nomenclature E-29
Interchange E-30
Applications E-30
Inch Series E-31

METRIC TAPERED ROLLER BEARINGS

Bore Size
(04 and up: multiply last two numbers by 5 to get bore in mm)
02: 12 mm **08:** 40 mm
03: 17 mm **10:** 50 mm
04: 20 mm **20:** 100 mm
Special bore sizes are as follows:
/22: 22 mm **/32:** 32 mm
/28: 28 mm

Interchangeability
J: Cup Angle and Raceway Diameter Conform to ISO 355
X: Dimension Series 32000 and 32900 the Major Dimensions Conform to ISO 355

Prefix
HR: High Capacity
Blank: Normal Capacity

STF	HR	322	10	C	J

Material Prefix
HTF: High Tough
STF: Super Tough
WTF: Water Tough
Blank: Standard Materials

Series

30200	32200
30300	32300
31300	32900
32000	33000
	33100
	33200

Contact Angle
Blank: Standard Angle = 15° to 17°
C: Medium Angle = 17° to 24°
D: Steep Angle= 24° and more

Please refer to the bearing tables for exact part number options

INTERCHANGE

Description		Interchange			
		NSK	SKF	Timken	FAG
Part Number	High Capacity Design	HR	--	--	--
	Light	HR302xx	302xx	302xx	302xx
	Medium	HR303xx	303xx	303xx	303xx
	Medium, Steep Angle	HR313xx	313xx	313xx	313xx
	Extra Light, Wide	HR329xx	329xx	329xx	329xx
	Very Light, Wide	HR320xx	320xx	320xx	320xx
	Light, Wide	HR322xx	322xx	322xx	322xx
	Medium, Wide	HR323xx	323xx	323xx	323xx
	Very Light, Extra Wide	HR330xx	330xx	330xx	330xx
	Light, Extra Wide	HR331xx	331xx	331xx	331xx
	Medium, Extra Wide	HR332xx	332xx	332xx	332xx
Suffix	Medium Contact Angle	C	B	B	B
	Steep Contact Angle	D	--	--	--
	Boundary Dimensions Conform to ISO 355	X	X	X	X
	Conforms to ISO 355	J	--	--	A

*HR313xx is directly equal to HR303xxD.

The competitive manufacturers are provided for a convenient source of unit substitution. They can be considered interchangeable in most instances, but for special applications, please contact NSK. NSK assumes no liability with respect to errors or omissions.

APPLICATIONS

Shown below are some common applications utilizing a tapered roller bearing design. The design allows for combinations of heavy radial and thrust loads with low to moderate speeds. This section covers only single row tapers although NSK manufactures a full line of two and four row tapers as well. For more details on multiple row tapered roller bearings, please contact an NSK representative.

Metric designs function the same as their inch series cousins, the difference lies in the units of measure. NSK metric tapers are standardly supplied with cup and cone together, while inch series bearing are available by the cup, cone, or cup and cone. The applications shown below are for either metric or inch bearings, with the equipment manufacturer choosing the preference of dimensional measurements. Metric tapers are usually found in equipment designed in Europe or Asia.

› Guide Boxes in Bar and Rod Mills › Pumps and Compressors › Cranes and Hoists › Gears and Drives › Stamping Presses
› Machine Tool Spindles › Bow Thrusts on Ships › Speed Reducers › Transmissions › Sheaves › Conveyor and Transfer Equipment
› Construction Equipment › Mining Equipment › Oil Field Equipment › Automotive Front and Rear Axles › Plastic Forming Equipment
› Agriculture Equipment › Motorcycle Wheels › Pinion Shafts of Differential Gears › Drum Shafts › Crankshafts › Crushers

TAPERED ROLLER BEARINGS: 30200 METRIC SERIES

BORE DIAMETER 15 – 320 MM, 0.5906 – 12.5984 INCH

Bearing Number	Nominal Bearing Dimensions										Preferred Shoulder Diameters									
	d		D		T		B		C		r* (Shaft) max		r* (Housing) max		d_a min		d_b max		D_a max	
	mm	inch	mm	inch	mm	inch	mm	inch	mm	inch	mm	inch	mm	inch	mm	inch	mm	inch	mm	inch
30202	15	0.5906	35	1.3780	11.75	0.4626	11	0.4331	10	0.3937	0.6	0.023	0.6	0.023	23	0.91	19	0.74	30	1.18
30203J	17	0.6693	40	1.5748	13.25	0.5217	12	0.4724	11	0.4331	1.0	0.039	1.0	0.039	26	1.03	23	0.90	34	1.33
30204J	20	0.7874	47	1.8504	15.25	0.6004	14	0.5512	12	0.4724	1.0	0.039	1.0	0.039	29	1.15	27	1.06	41	1.61
30205J	25	0.9843	52	2.0472	16.25	0.6398	15	0.5906	13	0.5118	1.0	0.039	1.0	0.039	34	1.34	31	1.22	46	1.81
30206J	30	1.1811	62	2.4409	17.25	0.6791	16	0.6299	14	0.5512	1.0	0.039	1.0	0.039	39	1.54	37	1.45	56	2.20
30207J	35	1.3780	72	2.8346	18.25	0.7185	17	0.6693	15	0.5906	1.5	0.059	1.5	0.059	46	1.82	43	1.69	63	2.48
30208J	40	1.5748	80	3.1496	19.75	0.7776	18	0.7087	16	0.6299	1.5	0.059	1.5	0.059	51	2.01	48	1.88	71	2.79
30209J	45	1.7717	85	3.3465	20.75	0.8169	19	0.7480	16	0.6299	1.5	0.059	1.5	0.059	56	2.21	53	2.08	76	2.99
30210J	50	1.9685	90	3.5433	21.75	0.8563	20	0.7874	17	0.6693	1.5	0.059	1.5	0.059	61	2.41	58	2.28	81	3.18
30211J	55	2.1654	100	3.9370	22.75	0.8957	21	0.8268	18	0.7087	2.0	0.078	1.5	0.059	67	2.64	64	2.51	91	3.58
30212J	60	2.3622	110	4.3307	23.75	0.9350	22	0.8661	19	0.7480	2.0	0.078	1.5	0.059	72	2.84	69	2.71	101	3.97
30213J	65	2.5591	120	4.7244	24.75	0.9744	23	0.9055	20	0.7874	2.0	0.078	1.5	0.059	77	3.04	78	3.07	111	4.37
30214J	70	2.7559	125	4.9213	26.25	1.0335	24	0.9449	21	0.8268	2.0	0.078	1.5	0.059	82	3.23	81	3.18	116	4.56
30215J	75	2.9528	130	5.1181	27.25	1.0728	25	0.9843	22	0.8661	2.0	0.078	1.5	0.059	87	3.43	85	3.34	121	4.76
30216J	80	3.1496	140	5.5118	28.25	1.1122	26	1.0236	22	0.8661	2.0	0.078	2.0	0.078	95	3.75	91	3.58	130	5.11
30217J	85	3.3465	150	5.9055	30.5	1.2008	28	1.1024	24	0.9449	2.0	0.078	2.0	0.078	100	3.94	97	3.81	140	5.51
30218J	90	3.5433	160	6.2992	32.5	1.2795	30	1.1811	26	1.0236	2.0	0.078	2.0	0.078	105	4.14	103	4.05	150	5.90
30219J	95	3.7402	170	6.6929	34.5	1.3583	32	1.2598	27	1.0630	2.5	0.098	2.0	0.078	113	4.45	110	4.33	158	6.22
30220J	100	3.9370	180	7.0866	37.0	1.4567	34	1.3386	29	1.1417	2.5	0.098	2.0	0.078	118	4.65	116	4.56	168	6.61
30221J	105	4.1339	190	7.4803	39.0	1.5354	36	1.4173	30	1.1811	2.5	0.098	2.0	0.078	123	4.85	123	4.84	178	7.00
30222J	110	4.3307	200	7.8740	41.0	1.6142	38	1.4961	32	1.2598	2.5	0.098	2.0	0.078	128	5.04	129	5.07	188	7.40
30224J	120	4.7244	215	8.4646	43.5	1.7126	40	1.5748	34	1.3386	2.5	0.098	2.0	0.078	138	5.44	141	5.55	203	7.99
30226J	130	5.1181	230	9.0551	43.75	1.7224	40	1.5748	34	1.3386	3	0.118	2.5	0.098	151	5.95	151	5.94	216	8.50
30228J	140	5.5118	250	9.8425	45.75	1.8012	42	1.6535	36	1.4173	3	0.118	2.5	0.098	161	6.34	164	6.45	236	9.29
30230	150	5.9055	270	10.6299	49	1.9291	45	1.7717	38	1.4961	3	0.118	2.5	0.098	171	6.74	175	6.88	256	10.07
30232	160	6.2992	290	11.4173	52	2.0472	48	1.8898	40	1.5748	3	0.118	2.5	0.098	181	7.13	189	7.44	276	10.86
30234	170	6.6929	310	12.2047	57	2.2441	52	2.0472	43	1.6929	4	0.157	3	0.118	197	7.76	202	7.95	292	11.49
30236	180	7.0866	320	12.5984	57	2.2441	52	2.0472	43	1.6929	4	0.157	3	0.118	207	8.15	210	8.26	302	11.88
30238	190	7.4803	340	13.3858	60	2.3622	55	2.1654	46	1.8110	4	0.157	3	0.118	217	8.55	223	8.77	322	12.67
30240	200	7.8740	360	14.1732	64	2.5197	58	2.2835	48	1.8898	4	0.157	3	0.118	227	8.94	236	9.29	342	13.46
30244	220	8.6614	400	15.7480	72	2.8346	68	2.6772	54	2.1260	4	0.157	3	0.118	247	9.73	267	10.51	382	15.03
30248	240	9.4488	440	17.3228	79	3.1102	72	2.8346	60	2.3622	4	0.157	3	0.118	267	10.52	288	11.33	422	16.61
30252	260	10.2362	480	18.8976	89	3.5039	80	3.1496	67	2.6378	5	0.196	4	0.157	293	11.54	316	12.44	458	18.03
30256	280	11.0236	500	19.6850	89	3.5039	80	3.1496	67	2.6378	5	0.196	4	0.157	313	12.33	339	13.34	478	18.81
30260	300	11.8110	540	21.2598	96	3.7795	85	3.3465	71	2.7953	5	0.196	4	0.157	333	13.12	355	13.97	518	20.39
30264	320	12.5984	580	22.8346	104	4.0945	92	3.6220	75	2.9528	5	0.196	4	0.157	353	13.90	381	15.00	558	21.96

*Maximum fillet which corner radius of bearing will clear.

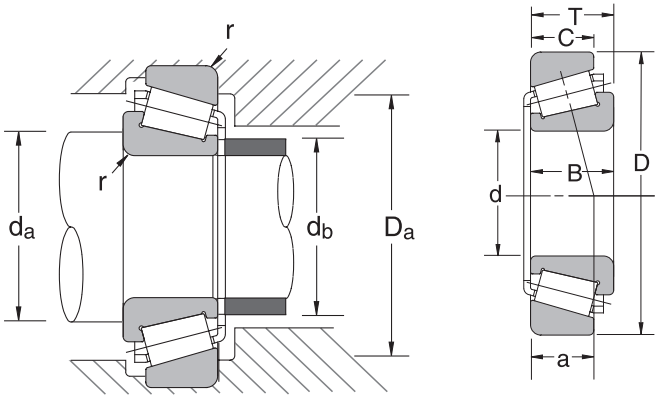

Bearing Number	Basic Load Ratings				Limiting Speeds (RPM)		Effective Load Center (a)		Bearing Weight (Approx.)	
	C_r		C_{or}		Grease	Oil	mm	inch	kg	lbs
	N	lbs	N	lbs						
30202	14800	3300	13200	2970	11000	15000	8.2	0.32	0.053	0.117
30203J	20100	4550	19900	4450	9500	13000	9.7	0.38	0.079	0.174
30204J	27900	6300	28500	6400	8000	11000	11.0	0.43	0.127	0.280
30205J	32000	7250	35000	7800	7100	10000	12.7	0.50	0.157	0.346
30206J	43000	9700	47500	10600	6000	8000	13.9	0.55	0.238	0.525
30207J	54000	12100	59500	13400	5300	7100	15.0	0.59	0.340	0.750
30208J	63500	14200	70000	15800	4800	6300	16.6	0.65	0.437	0.963
30209J	68500	15300	79500	17800	4300	6000	18.3	0.72	0.488	1.08
30210J	76000	17100	91500	20500	4000	5300	19.6	0.77	0.557	1.23
30211J	94500	21300	113000	25400	3600	5000	20.9	0.82	0.736	1.62
30212J	104000	23300	123000	27600	3400	4500	22.0	0.87	0.930	2.05
30213J	122000	27500	151000	34000	3000	4000	23.8	0.94	1.18	2.60
30214J	132000	29700	163000	36500	2800	4000	25.7	1.01	1.30	2.87
30215J	143000	32000	182000	41000	2800	3800	27.0	1.06	1.43	3.15
30216J	157000	35500	195000	44000	2600	3400	28.1	1.11	1.68	3.70
30217J	184000	41500	233000	52500	2400	3200	30.3	1.19	2.12	4.67
30218J	201000	45000	256000	57500	2200	3000	31.7	1.25	2.60	5.73
30219J	223000	50000	286000	64500	2200	2800	33.7	1.33	3.13	6.90
30220J	255000	57500	330000	74500	2000	2600	36.1	1.42	3.78	8.33
30221J	280000	63000	365000	82500	1900	2600	38.1	1.50	4.51	9.94
30222J	315000	71000	420000	94500	1800	2400	40.1	1.58	5.28	11.6
30224J	335000	75500	450000	101000	1600	2200	44.4	1.75	6.28	13.8
30226J	375000	84000	505000	113000	1500	2000	45.8	1.80	7.25	16.0
30228J	390000	87500	515000	116000	1400	1900	45.8	1.80	6.74	14.9
30230	435000	97500	570000	128000	1300	1700	51.3	2.02	11.2	24.7
30232	470000	105000	610000	137000	1200	1600	55.0	2.17	13.7	30.2
30234	525000	118000	690000	155000	1100	1500	59.4	2.34	17.1	37.7
30236	520000	117000	695000	156000	1100	1400	61.8	2.43	17.8	39.2
30238	580000	130000	790000	178000	1000	1300	64.4	2.54	21.4	47.2
30240	645000	145000	890000	200000	900	1300	68.7	2.70	25.1	55.3
30244	810000	182000	1150000	259000	850	1100	74.6	2.94	33.6	74.1
30248	990000	222000	1400000	315000	750	1000	85.1	3.35	45.2	99.6
30252	1190000	267000	1700000	385000	670	900	94.5	3.72	60.7	134
30256	1240000	279000	1900000	425000	630	850	98.5	3.88	66.3	146
30260	1440000	325000	2100000	470000	600	800	105.1	4.14	80.6	178
30264	1640000	370000	2420000	545000	530	750	113.7	4.48	99.3	219

C_r = Dynamic Radial Load Rating C_{or} = Static Radial Load Rating

TAPERED ROLLER BEARINGS: 30300 METRIC SERIES

BORE DIAMETER 15 – 260 MM, 0.5906 – 10.2362 INCH

Bearing Number	Nominal Bearing Dimensions										Preferred Shoulder Diameters									
	d		D		T		B		C		r* (Shaft)		r* (Housing)		d_a		d_b		D_a	
											max		max		min		max		max	
	mm	inch	mm	inch	mm	inch	mm	inch	mm	inch	mm	inch	mm	inch	mm	inch	mm	inch	mm	inch
HR30302J	15	0.5906	42	1.6535	14.25	0.5610	13	0.5118	11	0.4331	1.0	0.039	1.0	0.039	24	0.95	22	0.86	36	1.41
HR30303J	17	0.6693	47	1.8504	15.25	0.6004	14	0.5512	12	0.4724	1.0	0.039	1.0	0.039	26	1.03	24	0.94	41	1.61
HR30304J	20	0.7874	52	2.0472	16.25	0.6398	15	0.5906	13	0.5118	1.5	0.059	1.5	0.059	31	1.23	27	1.06	44	1.73
HR303/22	22	0.8661	56	2.2047	17.25	0.6791	16	0.6299	14	0.5512	1.5	0.059	1.5	0.059	33	1.30	30	1.18	47	1.85
HR30305J	25	0.9843	62	2.4409	18.25	0.7185	17	0.6693	15	0.5906	1.5	0.059	1.5	0.059	36	1.42	34	1.33	54	2.12
HR303/28	28	1.1024	68	2.6772	19.75	0.7776	18	0.7087	15	0.5906	1.5	0.059	1.5	0.059	39	1.54	37	1.45	59	2.32
HR30306J	30	1.1811	72	2.8346	20.75	0.8169	19	0.7480	16	0.6299	1.5	0.059	1.5	0.059	41	1.62	40	1.57	63	2.48
HR303/32	32	1.2598	75	2.9528	21.75	0.8563	20	0.7874	17	0.6693	1.5	0.059	1.5	0.059	44	1.74	42	1.65	66	2.59
HR30307J	35	1.3780	80	3.1496	22.75	0.8957	21	0.8268	18	0.7087	2.0	0.078	1.5	0.059	47	1.86	45	1.77	71	2.79
HR30308J	40	1.5748	90	3.5433	25.25	0.9941	23	0.9055	20	0.7874	2.0	0.078	1.5	0.059	52	2.05	52	2.04	81	3.18
HR30309J	45	1.7717	100	3.9370	27.25	1.0728	25	0.9843	22	0.8661	2.0	0.078	1.5	0.059	57	2.25	58	2.28	91	3.58
HR30310J	50	1.9685	110	4.3307	29.25	1.1516	27	1.0630	23	0.9055	2.0	0.078	2.0	0.078	65	2.56	65	2.55	100	3.93
HR30311J	55	2.1654	120	4.7244	31.5	1.2402	29	1.1417	25	0.9843	2.0	0.078	2.0	0.078	70	2.76	71	2.79	110	4.33
HR30312J	60	2.3622	130	5.1181	33.5	1.3189	31	1.2205	26	1.0236	2.5	0.098	2.0	0.078	78	3.08	77	3.03	118	4.64
HR30313J	65	2.5591	140	5.5118	36.0	1.4173	33	1.2992	28	1.1024	2.5	0.098	2.0	0.078	83	3.27	83	3.26	128	5.03
HR30314J	70	2.7559	150	5.9055	38.0	1.4961	35	1.3780	30	1.1811	2.5	0.098	2.0	0.078	88	3.47	89	3.50	138	5.43
HR30315J	75	2.9528	160	6.2992	40.0	1.5748	37	1.4567	31	1.2205	2.5	0.098	2.0	0.078	93	3.67	95	3.74	148	5.82
HR30316J	80	3.1496	170	6.6929	42.5	1.6732	39	1.5354	33	1.2992	2.5	0.098	2.0	0.078	98	3.86	102	4.01	158	6.22
HR30317J	85	3.3465	180	7.0866	44.5	1.7520	41	1.6142	34	1.3386	3	0.118	2.5	0.098	106	4.18	108	4.25	166	6.53
HR30318J	90	3.5433	190	7.4803	46.5	1.8307	43	1.6929	36	1.4173	3	0.118	2.5	0.098	111	4.38	114	4.48	176	6.92
HR30319J	95	3.7402	200	7.8740	49.5	1.9488	45	1.7717	38	1.4961	3	0.118	2.5	0.098	116	4.57	119	4.68	186	7.32
HR30320J	100	3.9370	215	8.4646	51.5	2.0276	47	1.8504	39	1.5354	3	0.118	2.5	0.098	121	4.77	128	5.03	201	7.91
HR30321J	105	4.1339	225	8.8583	53.5	2.1063	49	1.9291	41	1.6142	3	0.118	2.5	0.098	126	4.97	133	5.23	211	8.30
HR30322J	110	4.3307	240	9.4488	54.5	2.1457	50	1.9685	42	1.6535	3	0.118	2.5	0.098	131	5.16	143	5.62	226	8.89
HR30324J	120	4.7244	260	10.2362	59.5	2.3425	55	2.1654	46	1.8110	3	0.118	2.5	0.098	141	5.56	154	6.06	246	9.68
HR30326J	130	5.1181	280	11.0236	63.75	2.5098	58	2.2835	49	1.9291	4	0.157	3	0.118	157	6.19	166	6.53	262	10.31
HR30328J	140	5.5118	300	11.8110	67.75	2.6673	62	2.4409	53	2.0866	4	0.157	3	0.118	167	6.58	177	6.96	282	11.10
HR30330J	150	5.9055	320	12.5984	72	2.8346	65	2.5591	55	2.1654	4	0.157	3	0.118	177	6.97	190	7.48	302	11.88
HR30332J	160	6.2992	340	13.3858	75	2.9528	68	2.6772	58	2.2835	4	0.157	3	0.118	187	7.37	201	7.91	322	12.67
HR30334J	170	6.6929	360	14.1732	80	3.1496	72	2.8346	62	2.4409	4	0.157	3	0.118	197	7.76	214	8.42	342	13.46
30336	180	7.0866	380	14.9606	83	3.2677	75	2.9528	64	2.5197	4	0.157	3	0.118	207	8.15	233	9.17	362	14.25
30338	190	7.4803	400	15.7480	86	3.3858	78	3.0709	65	2.5591	5	0.196	4	0.157	223	8.78	248	9.76	378	14.88
30340	200	7.8740	420	16.5354	89	3.5039	80	3.1496	67	2.6378	5	0.196	4	0.157	233	9.18	253	9.96	398	15.66
30344	220	8.6614	460	18.1102	97	3.8189	88	3.4646	73	2.8740	5	0.196	4	0.157	253	9.97	283	11.14	438	17.24
30348	240	9.4488	500	19.6850	105	4.1339	95	3.7402	80	3.1496	5	0.196	4	0.157	273	10.75	308	12.12	478	18.81
30352	260	10.2362	540	21.2598	113	4.4488	102	4.0157	85	3.3465	5	0.196	5	0.196	293	11.54	336	13.22	512	20.15

*Maximum fillet which corner radius of bearing will clear.

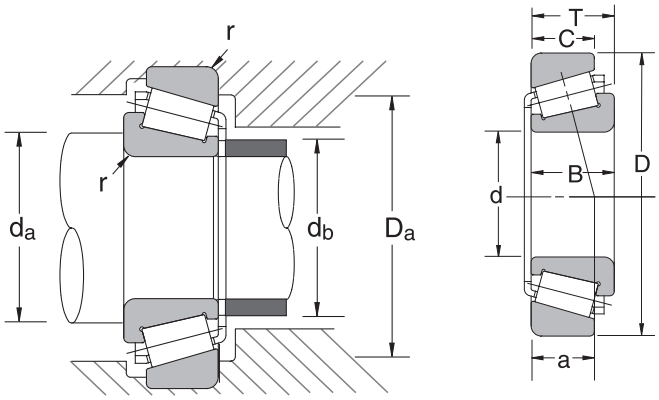

Bearing Number	Basic Load Ratings				Limiting Speeds (RPM)		Effective Load Center (a)		Bearing Weight (Approx.)	
	C_r		C_{or}		Grease	Oil	mm	inch	kg	lbs
	N	lbs	N	lbs						
HR30302J	23600	5300	21100	4750	9500	13000	9.5	0.37	0.098	0.216
HR30303J	29200	6550	26700	6000	8500	12000	10.4	0.41	0.134	0.295
HR30304J	35000	7850	33500	7500	7500	10000	11.6	0.46	0.172	0.379
HR303/22	37000	8300	36500	8200	7160	9710	12.4	0.49	0.208	0.459
HR30305J	47500	10700	46000	10400	6300	8500	13.2	0.52	0.270	0.595
HR303/28	55000	12400	55500	12500	6000	8000	14.5	0.57	0.341	0.752
HR30306J	59500	13300	60000	13500	5300	7500	15.1	0.59	0.403	0.888
HR303/32	56000	12600	56000	12600	5300	7100	15.9	0.63	0.435	0.959
HR30307J	76000	17100	79000	17700	4800	6700	16.7	0.66	0.538	1.19
HR30308J	90500	20300	101000	22600	4300	5600	19.5	0.77	0.758	1.67
HR30309J	112000	25100	127000	28400	3800	5300	21.1	0.83	1.01	2.23
HR30310J	130000	29300	148000	33500	3400	4800	23.1	0.91	1.28	2.82
HR30311J	150000	33500	171000	38500	3200	4300	24.6	0.97	1.63	3.59
HR30312J	174000	39000	201000	45500	3000	4000	26.0	1.02	2.03	4.48
HR30313J	200000	45000	200000	52500	2600	3600	27.9	1.10	2.51	5.53
HR30314J	227000	51000	268000	60500	2400	3400	29.7	1.17	3.03	6.68
HR30315J	253000	57000	300000	67500	2400	3200	31.8	1.25	3.63	8.00
HR30316J	276000	62000	330000	74000	2200	3000	34.0	1.34	4.27	9.41
HR30317J	310000	69500	375000	84000	2000	2800	35.7	1.41	5.08	11.2
HR30318J	345000	78000	425000	95000	1900	2600	37.3	1.47	5.91	13.0
HR30319J	370000	83500	455000	102000	1900	2600	38.6	1.52	6.92	15.3
HR30320J	425000	95500	525000	118000	1700	2400	41.1	1.62	8.41	18.5
HR30321J	455000	102000	565000	127000	1600	2200	43.2	1.70	9.52	21.0
HR30322J	485000	109000	595000	133000	1500	2000	45.1	1.78	11.0	24.3
HR30324J	535000	120000	655000	147000	1400	1900	50.0	1.97	13.9	30.6
HR30326J	650000	146000	820000	184000	1300	1800	52.7	2.07	17.2	37.9
HR30328J	740000	166000	945000	213000	1200	1700	55.7	2.19	21.1	46.5
HR30330J	825000	186000	1060000	239000	1100	1600	60.0	2.36	25.0	55.1
HR30332J	915000	205000	1180000	266000	1100	1400	62.9	2.48	29.2	64.4
HR30334J	1010000	227000	1310000	294000	1000	1300	67.3	2.65	34.5	76.1
30336	935000	210000	1230000	277000	900	1300	72.4	2.85	39.3	86.6
30338	1010000	228000	1340000	300000	850	1200	76.1	3.00	46.0	101
30340	1030000	231000	1390000	315000	850	1200	81.4	3.20	52.3	115
30344	1430000	320000	1990000	445000	750	1000	85.3	3.36	72.4	160
30348	1660000	370000	2340000	525000	670	950	92.8	3.65	92.6	204
30352	1870000	420000	2640000	595000	630	850	101.6	4.00	114	251

C_r = Dynamic Radial Load Rating C_{or} = Static Radial Load Rating

TAPERED ROLLER BEARINGS: 31300 METRIC SERIES

BORE DIAMETER 25 - 150 MM, 0.9843 - 5.9055 INCH

Bearing Number	Nominal Bearing Dimensions										Preferred Shoulder Diameters									
	d		D		T		B		C		r* (Shaft) max		r* (Housing) max		d_a min		d_b max		D_a max	
	mm	inch	mm	inch	mm	inch	mm	inch	mm	inch	mm	inch	mm	inch	mm	inch	mm	inch	mm	inch
HR31305J	25	0.9843	62	2.4409	18.25	0.7185	17	0.6693	13	0.5118	1.5	0.059	1.5	0.059	39	1.54	33	1.29	53	2.08
HR31306J	30	1.1811	72	2.8346	20.75	0.8169	19	0.7480	14	0.5512	1.5	0.059	1.5	0.059	44	1.74	40	1.57	63	2.48
HR31307J	35	1.3780	80	3.1496	22.75	0.8957	21	0.8268	15	0.5906	2.0	0.078	1.5	0.059	51	2.01	44	1.73	71	2.79
HR31308J	40	1.5748	90	3.5433	25.25	0.9941	23	0.9055	17	0.6693	2.0	0.078	1.5	0.059	56	2.21	50	1.96	81	3.18
HR31309J	45	1.7717	100	3.9370	27.25	1.0728	25	0.9843	18	0.7087	2.0	0.078	1.5	0.059	61	2.41	57	2.24	91	3.58
HR31310J	50	1.9685	110	4.3307	29.25	1.1516	27	1.0630	19	0.7480	2.0	0.078	2.0	0.078	70	2.76	62	2.44	100	3.93
HR31311J	55	2.1654	120	4.7244	31.5	1.2402	29	1.1417	21	0.8268	2.0	0.078	2.0	0.078	75	2.96	67	2.63	110	4.33
HR31312J	60	2.3622	130	5.1181	33.5	1.3189	31	1.2205	22	0.8661	2.5	0.098	2.0	0.078	84	3.31	74	2.91	118	4.64
HR31313J	65	2.5591	140	5.5118	36.0	1.4173	33	1.2992	23	0.9055	2.5	0.098	2.0	0.078	89	3.51	80	3.14	128	5.03
HR31314J	70	2.7559	150	5.9055	38.0	1.4961	35	1.3780	25	0.9843	2.5	0.098	2.0	0.078	94	3.71	85	3.34	138	5.43
HR31315J	75	2.9528	160	6.2992	40.0	1.5748	37	1.4567	26	1.0236	2.5	0.098	2.0	0.078	99	3.90	91	3.58	148	5.82
HR31316J	80	3.1496	170	6.6929	42.5	1.6732	39	1.5354	27	1.0630	2.5	0.098	2.0	0.078	104	4.10	97	3.81	158	6.22
HR31317J	85	3.3465	180	7.0866	44.5	1.7520	41	1.6142	28	1.1024	3	0.118	2.5	0.098	113	4.45	103	4.05	166	6.53
HR31318J	90	3.5433	190	7.4803	46.5	1.8307	43	1.6929	30	1.1811	3	0.118	2.5	0.098	118	4.65	110	4.33	176	6.92
HR31319J	95	3.7402	200	7.8740	49.5	1.9488	45	1.7717	32	1.2598	3	0.118	2.5	0.098	123	4.85	115	4.52	186	7.32
HR31320J	100	3.9370	215	8.4646	51.5	2.0276	47	1.8504	34	1.3386	3	0.118	2.5	0.098	136	5.36	125	4.92	201	7.91
HR31321J	105	4.1339	225	8.8583	53.5	2.1063	49	1.9291	35	1.3780	3	0.118	2.5	0.098	141	5.56	130	5.11	211	8.30
HR31322J	110	4.3307	240	9.4488	54.5	2.1457	50	1.9685	36	1.4173	3	0.118	2.5	0.098	146	5.75	136	5.35	226	8.89
HR31324J	120	4.7244	260	10.2362	68.0	2.6771	62	2.4409	42	1.6535	3	0.118	2.5	0.098	156	6.15	148	5.82	246	9.68
HR31326J	130	5.1181	280	11.0236	63.75	2.5098	58	2.2835	39	1.5354	4	0.157	3	0.118	174	6.86	159	6.25	262	10.31
HR31328J	140	5.5118	300	11.8110	67.75	2.6673	62	2.4409	43	1.6929	4	0.157	3	0.118	184	7.25	174	6.85	282	11.10
HR31330J	150	5.9055	320	12.5984	72.0	2.8346	65	2.5591	45	1.7717	4	0.157	3	0.118	194	7.64	187	7.36	302	11.88

*Maximum fillet which corner radius of bearing will clear.

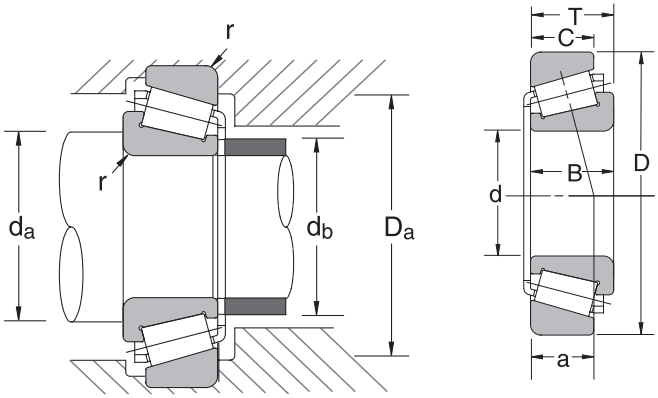

Bearing Number	Basic Load Ratings				Limiting Speeds (RPM)		Effective Load Center (a)		Bearing Weight (Approx.)	
	C_r		C_{or}		Grease	Oil	mm	inch	kg	lbs
	N	lbs	N	lbs						
HR31305J	38000	8550	40500	9050	5600	8000	19.9	0.78	0.265	0.584
HR31306J	49000	11000	52500	11800	4800	6800	23.1	0.91	0.393	0.866
HR31307J	62000	13900	68000	15300	4300	6000	25.2	0.99	0.520	1.15
HR31308J	80000	17900	89500	20200	3800	5300	28.7	1.13	0.728	1.60
HR31309J	95500	21500	109000	24400	3400	4800	31.5	1.24	0.947	2.09
HR31310J	114000	25700	132000	29600	3200	4300	34.2	1.35	1.26	2.78
HR31311J	131000	29500	153000	34500	2800	4000	37.0	1.46	1.58	3.48
HR31312J	151000	34000	177000	40000	2600	3800	40.3	1.59	1.98	4.37
HR31313J	173000	39000	205000	46000	2400	3400	43.2	1.70	2.43	5.36
HR31314J	192000	43000	229000	51500	2200	3200	45.7	1.80	2.94	6.48
HR31315J	211000	47500	251000	56500	2200	3000	48.7	1.92	3.47	7.65
HR31316J	235000	53000	283000	63500	2000	2800	51.8	2.04	4.07	8.97
HR31317J	261000	58500	315000	70500	1900	2600	55.3	2.18	4.88	10.8
HR31318J	264000	59500	315000	70500	1800	2400	58.6	2.31	5.52	12.2
HR31319J	310000	69500	375000	84500	1700	2400	61.9	2.44	6.64	14.6
HR31320J	385000	86500	505000	114000	1500	2200	67.7	2.67	9.02	19.9
HR31321J	415000	93000	540000	121000	1500	2000	70.2	2.76	10.0	22.0
HR31322J	470000	106000	605000	136000	1400	1900	74.7	2.94	12.3	27.1
HR31324J	560000	126000	730000	164000	1300	1800	81.6	3.21	15.6	34.4
HR31326J	625000	140000	820000	184000	1200	1700	87.1	3.43	18.8	41.4
HR31328J	695000	156000	955000	215000	1100	1500	92.8	3.65	28.5	62.8
HR31330J	790000	178000	1100000	247000	1000	1400	99.3	3.91	28.5	62.8

C_r = Dynamic Radial Load Rating C_{or} = Static Radial Load Rating

TAPERED ROLLER BEARINGS: 32000 METRIC SERIES

BORE DIAMETER 20 - 320 MM, 0.7874 – 12.5984 INCH

Bearing Number	Nominal Bearing Dimensions										Preferred Shoulder Diameters									
	d		D		T		B		C		r* (Shaft) max		r* (Housing) max		d_a min		d_b max		D_a max	
	mm	inch	mm	inch	mm	inch	mm	inch	mm	inch	mm	inch	mm	inch	mm	inch	mm	inch	mm	inch
HR32004XJ	20	0.7874	42	1.6535	15	0.5906	15	0.5906	12.0	0.4724	0.6	0.023	0.6	0.023	28	1.11	24	0.94	37	1.45
HR320/22XJ	22	0.8661	44	1.7323	15	0.5906	15	0.5906	11.5	0.4528	0.6	0.023	0.6	0.023	30	1.19	27	1.06	39	1.53
HR32005XJ	25	0.9843	47	1.8504	15	0.5906	15	0.5906	11.5	0.4528	0.6	0.023	0.6	0.023	33	1.30	30	1.18	42	1.65
HR320/28XJ	28	1.1024	52	2.0472	16	0.6299	16	0.6299	12.0	0.4724	1.0	0.039	1.0	0.039	37	1.46	33	1.29	46	1.81
HR32006XJ	30	1.1811	55	2.1654	17	0.6693	17	0.6693	13.0	0.5118	1.0	0.039	1.0	0.039	39	1.54	35	1.37	49	1.92
HR320/32XJ	32	1.2598	58	2.2835	17	0.6693	17	0.6693	13.0	0.5118	1.0	0.039	1.0	0.039	41	1.62	37	1.45	52	2.04
HR32007XJ	35	1.3780	62	2.4409	18	0.7087	18	0.7087	14.0	0.5512	1.0	0.039	1.0	0.039	44	1.74	40	1.57	56	2.20
HR32008XJ	40	1.5748	68	2.6772	19	0.7480	19	0.7480	14.5	0.5709	1.0	0.039	1.0	0.039	49	1.93	45	1.77	62	2.44
HR32009XJ	45	1.7717	75	2.9528	20	0.7874	20	0.7874	15.5	0.6102	1.0	0.039	1.0	0.039	54	2.13	51	2.00	69	2.71
HR32010XJ	50	1.9685	80	3.1496	20	0.7874	20	0.7874	15.5	0.6102	1.0	0.039	1.0	0.039	59	2.33	56	2.20	74	2.91
HR32011XJ	55	2.1654	90	3.5433	23	0.9055	23	0.9055	17.5	0.6890	1.5	0.059	1.5	0.059	66	2.60	62	2.44	81	3.18
HR32012XJ	60	2.3622	95	3.7402	23	0.9055	23	0.9055	17.5	0.6890	1.5	0.059	1.5	0.059	71	2.80	66	2.59	86	3.38
HR32013XJ	65	2.5591	100	3.9370	23	0.9055	23	0.9055	17.5	0.6890	1.5	0.059	1.5	0.059	76	3.00	71	2.79	91	3.58
HR32014XJ	70	2.7559	110	4.3307	25	0.9843	25	0.9843	19	0.7480	1.5	0.059	1.5	0.059	81	3.19	77	3.03	101	3.97
HR32015XJ	75	2.9528	115	4.5276	25	0.9843	25	0.9843	19	0.7480	1.5	0.059	1.5	0.059	86	3.39	82	3.22	106	4.17
HR32016XJ	80	3.1496	125	4.9213	29	1.1417	29	1.1417	22	0.8661	1.5	0.059	1.5	0.059	91	3.59	89	3.50	116	4.56
HR32017XJ	85	3.3465	130	5.1181	29	1.1417	29	1.1417	22	0.8661	1.5	0.059	1.5	0.059	96	3.78	94	3.70	121	4.76
HR32018XJ	90	3.5433	140	5.5118	32	1.2598	32	1.2598	24	0.9449	2.0	0.078	1.5	0.059	102	4.02	99	3.89	131	5.15
HR32019XJ	95	3.7402	145	5.7087	32	1.2598	32	1.2598	24	0.9449	2.0	0.078	1.5	0.059	107	4.22	104	4.09	136	5.35
HR32020XJ	100	3.9370	150	5.9055	32	1.2598	32	1.2598	24	0.9449	2.0	0.078	1.5	0.059	112	4.41	109	4.29	141	5.55
HR32021XJ	105	4.1339	160	6.2992	35	1.3780	35	1.3780	26	1.0236	2.0	0.078	2.0	0.078	120	4.73	115	4.52	150	5.90
HR32022XJ	110	4.3307	170	6.6929	38	1.4961	38	1.4961	29	1.1417	2.0	0.078	2.0	0.078	125	4.93	121	4.76	160	6.29
HR32024XJ	120	4.7244	180	7.0866	38	1.4961	38	1.4961	29	1.1417	2.0	0.078	2.0	0.078	135	5.32	131	5.15	170	6.69
HR32026XJ	130	5.1181	200	7.8740	45	1.7717	45	1.7717	34	1.3386	2.0	0.078	2.0	0.078	145	5.71	144	5.66	190	7.48
HR32028XJ	140	5.5118	210	8.2677	45	1.7717	45	1.7717	34	1.3386	2.0	0.078	2.0	0.078	155	6.11	152	5.98	200	7.87
HR32030XJ	150	5.9055	225	8.8583	48	1.8898	48	1.8898	36	1.4173	2.5	0.098	2.0	0.078	168	6.62	164	6.45	213	8.38
HR32032XJ	160	6.2992	240	9.4488	51	2.0079	51	2.0079	38	1.4961	2.5	0.098	2.0	0.078	178	7.01	175	6.88	228	8.97
HR32034XJ	170	6.6929	260	10.2362	57	2.2441	57	2.2441	43	1.6929	2.5	0.098	2.0	0.078	188	7.41	187	7.36	248	9.76
HR32036XJ	180	7.0866	280	11.0236	64	2.5197	64	2.5197	48	1.8898	2.5	0.098	2.0	0.078	198	7.80	199	7.83	268	10.55
HR32038XJ	190	7.4803	290	11.4173	64	2.5197	64	2.5197	48	1.8898	2.5	0.098	2.0	0.078	208	8.19	209	8.22	278	10.94
HR32040XJ	200	7.8740	310	12.2047	70	2.7559	70	2.7559	53	2.0866	2.5	0.098	2.0	0.078	218	8.59	221	8.70	298	11.73
HR32044XJ	220	8.6614	340	13.3858	76	2.9921	76	2.9921	57	2.2441	3.0	0.118	2.5	0.098	241	9.49	244	9.60	326	12.83
HR32048XJ	240	9.4488	360	14.1732	76	2.9921	76	2.9921	57	2.2441	3.0	0.118	2.5	0.098	261	10.28	262	10.31	346	13.62
HR32052XJ	260	10.2362	400	15.7480	87	3.4252	87	3.4252	65	2.5591	4.0	0.157	3.0	0.118	287	11.30	287	11.29	382	15.03
HR32056XJ	280	11.0236	420	16.5354	87	3.4252	87	3.4252	65	2.5591	4.0	0.157	3.0	0.118	307	12.09	305	12.00	402	15.82
HR32060XJ	300	11.8110	460	18.1102	100	3.9370	100	3.9370	74	2.9134	4.0	0.157	3.0	0.118	327	12.88	330	12.99	442	17.40
HR32064XJ	320	12.5984	480	18.8976	100	3.9370	100	3.9370	74	2.9134	4.0	0.157	3.0	0.118	347	13.67	350	13.77	462	18.18

*Maximum fillet which corner radius of bearing will clear.

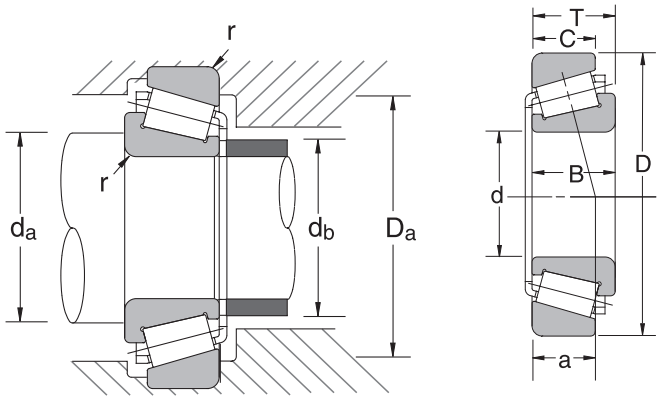

Bearing Number	Basic Load Ratings				Limiting Speeds (RPM)		Effective Load Center (a)		Bearing Weight (Approx.)	
	C_r		C_{or}		Grease	Oil	mm	inch	kg	lbs
	N	lbs	N	lbs						
HR32004XJ	24600	5550	27400	6150	9000	12000	10.6	0.42	0.097	0.214
HR320/22XJ	25600	5750	29400	6600	8500	11000	11.1	0.44	0.103	0.227
HR32005XJ	27400	6150	33000	7450	8000	11000	11.8	0.46	0.116	0.256
HR320/28XJ	32000	7200	39000	8750	7100	9500	12.8	0.50	0.146	0.322
HR32006XJ	36000	8150	44500	10000	6700	9000	13.5	0.53	0.172	0.379
HR320/32XJ	37500	8400	47000	10600	6300	8500	14.2	0.56	0.191	0.421
HR32007XJ	43500	9750	55500	12400	5600	8000	15.0	0.59	0.229	0.505
HR32008XJ	53000	11900	71000	16000	5300	7100	15.0	0.59	0.280	0.617
HR32009XJ	60000	13500	83000	18700	4500	6300	16.6	0.65	0.354	0.780
HR32010XJ	61000	13800	87000	19600	4300	6000	17.9	0.70	0.380	0.838
HR32011XJ	81500	18300	117000	26200	3800	5300	19.7	0.78	0.568	1.25
HR32012XJ	85500	19200	127000	28500	3600	5000	20.9	0.82	0.608	1.34
HR32013XJ	86500	19400	132000	29700	3400	4500	22.4	0.88	0.646	1.42
HR32014XJ	104000	23500	158000	35500	3200	4300	23.7	0.93	0.869	1.92
HR32015XJ	109000	24500	171000	38500	3000	4000	25.1	0.99	0.925	2.04
HR32016XJ	140000	31500	222000	50000	2800	3600	26.9	1.06	1.32	2.91
HR32017XJ	143000	32000	231000	52000	2600	3600	28.2	1.11	1.38	3.04
HR32018XJ	170000	38000	273000	61500	2400	3200	29.7	1.17	1.78	3.92
HR32019XJ	173000	39000	283000	63500	2400	3200	31.2	1.23	1.88	4.14
HR32020XJ	176000	39500	294000	66000	2200	3000	32.5	1.28	1.95	4.30
HR32021XJ	204000	46000	340000	76000	2000	2800	34.3	1.35	2.48	5.47
HR32022XJ	236000	53000	390000	88000	2000	2600	35.9	1.41	3.09	6.81
HR32024XJ	242000	54500	405000	90500	1800	2400	39.7	1.56	3.27	7.21
HR32026XJ	320000	72000	535000	120000	1600	2200	43.9	1.73	5.06	11.2
HR32028XJ	325000	73000	555000	125000	1600	2200	46.6	1.83	5.32	11.7
HR32030XJ	375000	84000	650000	146000	1400	2000	49.8	1.96	6.60	14.6
HR32032XJ	425000	95500	750000	168000	1300	1800	53.0	2.09	7.93	17.5
HR32034XJ	505000	114000	890000	200000	1200	1700	56.6	2.23	10.6	23.4
HR32036XJ	640000	143000	1130000	253000	1200	1600	60.4	2.38	14.3	31.5
HR32038XJ	650000	146000	1170000	263000	1100	1500	63.3	2.49	14.9	32.8
HR32040XJ	760000	171000	1370000	310000	1000	1400	67.4	2.65	18.9	41.7
HR32044XJ	885000	199000	1610000	360000	950	1300	73.6	2.90	24.4	53.8
HR32048XJ	920000	207000	1730000	390000	850	1200	79.1	3.11	26.2	57.8
HR32052XJ	1160000	261000	2160000	485000	800	1100	86.3	3.40	38.5	84.9
HR32056XJ	1180000	265000	2240000	505000	710	1000	91.6	3.61	40.6	89.5
HR32060XJ	1440000	325000	2700000	605000	670	900	98.4	3.87	56.6	125
HR32064XJ	1510000	340000	2910000	655000	630	850	104.5	4.11	60.0	132

C_r = Dynamic Radial Load Rating C_{or} = Static Radial Load Rating

TAPERED ROLLER BEARINGS: 32200 METRIC SERIES

BORE DIAMETER 17 - 320 MM, 0.6693 – 12.5984 INCH

Bearing Number	Nominal Bearing Dimensions										Preferred Shoulder Diameters									
	d		D		T		B		C		r* (Shaft) max		r* (Housing) max		d_a min		d_b max		D_a max	
	mm	inch	mm	inch	mm	inch	mm	inch	mm	inch	mm	inch	mm	inch	mm	inch	mm	inch	mm	inch
HR32203J	17	0.6693	40	1.5748	17.25	0.6791	16	0.6299	14	0.5512	1.0	0.039	1.0	0.039	26	1.03	22	0.86	34	1.33
HR32204J	20	0.7874	47	1.8504	19.25	0.7579	18	0.7087	15	0.5906	1.0	0.039	1.0	0.039	29	1.15	25	0.98	41	1.61
HR322/22	22	0.8661	50	1.9685	19.25	0.7579	18	0.7087	15	0.5906	1.0	0.039	1.0	0.039	31	1.23	28	1.10	44	1.73
HR32205J	25	0.9843	52	2.0472	19.25	0.7579	18	0.7087	16	0.6299	1.0	0.039	1.0	0.039	34	1.34	30	1.18	46	1.81
HR322/28	28	1.1024	58	2.2835	20.25	0.7972	19	0.7480	16	0.6299	1.0	0.039	1.0	0.039	37	1.46	34	1.33	52	2.04
HR32206J	30	1.1811	62	2.4409	21.25	0.8366	20	0.7874	17	0.6693	1.0	0.039	1.0	0.039	39	1.54	36	1.41	56	2.20
HR322/32	32	1.2598	75	2.9528	21.75	0.8563	20	0.7874	17	0.6693	1.0	0.039	1.0	0.039	41	1.62	38	1.49	59	2.32
HR32207J	35	1.3780	72	2.8346	24.25	0.9547	23	0.9055	19	0.7480	1.5	0.059	1.5	0.059	46	1.82	42	1.65	63	2.48
HR32208J	40	1.5748	80	3.1496	24.75	0.9744	23	0.9055	19	0.7480	1.5	0.059	1.5	0.059	51	2.01	48	1.88	71	2.79
HR32209J	45	1.7717	85	3.3465	24.75	0.9744	23	0.9055	19	0.7480	1.5	0.059	1.5	0.059	56	2.21	53	2.08	76	2.99
HR32210J	50	1.9685	90	3.5433	24.75	0.9744	23	0.9055	19	0.7480	1.5	0.059	1.5	0.059	61	2.41	57	2.24	81	3.18
HR32211J	55	2.1654	100	3.9370	26.75	1.0531	25	0.9843	21	0.8268	2.0	0.078	1.5	0.059	67	2.64	63	2.48	91	3.58
HR32212J	60	2.3622	110	4.3307	29.75	1.1713	28	1.1024	24	0.9449	2.0	0.078	1.5	0.059	72	2.84	68	2.67	101	3.97
HR32213J	65	2.5591	120	4.7244	32.75	1.2894	31	1.2205	27	1.0630	2.0	0.078	1.5	0.059	77	3.04	75	2.95	111	4.37
HR32214J	70	2.7559	125	4.9213	33.25	1.3091	31	1.2205	27	1.0630	2.0	0.078	1.5	0.059	82	3.23	80	3.14	116	4.56
HR32215J	75	2.9528	130	5.1181	33.25	1.3091	31	1.2205	27	1.0630	2.0	0.078	1.5	0.059	87	3.43	84	3.30	121	4.76
HR32216J	80	3.1496	140	5.5118	35.25	1.3878	33	1.2992	28	1.1024	2.0	0.078	2.0	0.078	95	3.75	90	3.54	130	5.11
HR32217J	85	3.3465	150	5.9055	38.5	1.5157	36	1.4173	30	1.1811	2.0	0.078	2.0	0.078	100	3.94	96	3.77	140	5.51
HR32218J	90	3.5433	160	6.2992	42.5	1.6732	40	1.5748	34	1.3386	2.0	0.078	2.0	0.078	105	4.14	102	4.01	150	5.90
HR32219J	95	3.7402	170	6.6929	45.5	1.7913	43	1.6929	37	1.4567	2.5	0.098	2.0	0.078	113	4.45	108	4.25	158	6.22
HR32220J	100	3.9370	180	7.0866	49	1.9291	46	1.8110	39	1.5354	2.5	0.098	2.0	0.078	118	4.65	115	4.52	168	6.61
HR32221J	105	4.1339	190	7.4803	53	2.0866	50	1.9685	43	1.6929	2.5	0.098	2.0	0.078	123	4.85	120	4.72	178	7.00
HR32222J	110	4.3307	200	7.8740	56	2.2047	53	2.0866	46	1.8110	2.5	0.098	2.0	0.078	128	5.04	127	5.00	188	7.40
HR32224J	120	4.7244	215	8.4646	61.5	2.4213	58	2.2835	50	1.9685	2.5	0.098	2.0	0.078	138	5.44	137	5.39	203	7.99
HR32226J	130	5.1181	230	9.0551	67.75	2.6673	64	2.5197	54	2.1260	3	0.118	2.5	0.098	151	5.95	147	5.78	216	8.50
HR32228J	140	5.5118	250	9.8425	71.75	2.8248	68	2.6772	58	2.2835	3	0.118	2.5	0.098	161	6.34	159	6.25	236	9.29
HR32230J	150	5.9055	270	10.6299	77	3.0315	73	2.8740	60	2.3622	3	0.118	2.5	0.098	171	6.74	171	6.73	256	10.07
HR32232J	160	6.2992	290	11.4173	84	3.3071	80	3.1496	67	2.6378	3	0.118	2.5	0.098	181	7.13	184	7.24	276	10.86
HR32234J	170	6.6929	310	12.2047	91	3.5827	86	3.3858	71	2.7953	4	0.157	3	0.118	197	7.76	197	7.75	292	11.49
HR32236J	180	7.0866	320	12.5984	91	3.5827	86	3.3858	71	2.7953	4	0.157	3	0.118	207	8.15	205	8.07	302	11.88
HR32238J	190	7.4803	340	13.3858	97	3.8189	92	3.6220	75	2.9528	4	0.157	3	0.118	217	8.55	216	8.50	322	12.67
HR32240J	200	7.8740	360	14.1732	104	4.0945	98	3.8583	82	3.2283	4	0.157	3	0.118	227	8.94	230	9.05	342	13.46
32244	220	8.6614	400	15.7480	114	4.4882	108	4.2520	90	3.5433	4	0.157	3	0.118	247	9.73	260	10.23	382	15.03
32248	240	9.4488	440	17.3228	127	5.0000	120	4.7244	100	3.9370	4	0.157	3	0.118	267	10.52	285	11.22	422	16.61
32252	260	10.2362	480	18.8976	137	5.3937	130	5.1181	106	4.1732	5	0.196	4	0.157	293	11.54	305	12.00	458	18.03
32256	280	11.0236	500	19.6850	137	5.3937	130	5.1181	106	4.1732	5	0.196	4	0.157	313	12.33	325	12.79	478	18.81
32260	300	11.8110	540	21.2598	149	5.8661	140	5.5118	115	4.5276	5	0.196	4	0.157	333	13.12	352	13.85	518	20.39
32264	320	12.5984	580	22.8346	159	6.2598	150	5.9055	125	4.9213	5	0.196	4	0.157	353	13.90	383	15.07	558	21.96

*Maximum fillet which corner radius of bearing will clear.

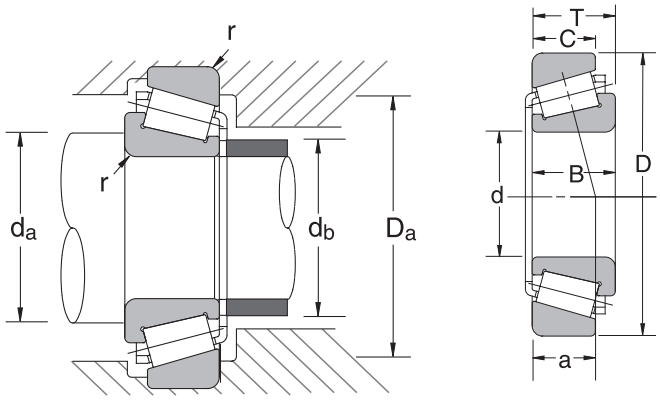

Bearing Number	Basic Load Ratings				Limiting Speeds (RPM)		Effective Load Center (a)		Bearing Weight (Approx.)	
	C_r		C_{or}		Grease	Oil	mm	inch	kg	lbs
	N	lbs	N	lbs						
HR32203J	27100	6100	28000	6300	9720	13200	11.2	0.44	0.103	0.227
HR32204J	35500	8000	37500	8450	8470	11490	12.6	0.50	0.161	0.355
HR322/22	36500	8250	40500	9100	7750	10510	13.5	0.53	0.180	0.397
HR32205J	40000	8950	45000	10100	7230	9810	13.5	0.53	0.189	0.417
HR322/28	47500	10700	54000	122000	6480	8800	14.6	0.57	0.243	0.536
HR32206J	52000	11700	60000	13500	6100	8280	15.4	0.61	0.297	0.655
HR322/32	56000	12600	65000	14600	5870	7970	15.9	0.63	0.336	0.741
HR32207J	70500	15800	83500	18800	5300	7100	17.9	0.70	0.456	1.01
HR32208J	77000	17400	90500	20300	4800	6300	18.9	0.74	0.548	1.21
HR32209J	83000	18700	102000	23000	4300	6000	20.1	0.79	0.602	1.33
HR32210J	87500	19700	109000	24500	4000	5300	21.0	0.83	0.642	1.42
HR32211J	110000	24700	137000	31000	3600	5000	22.7	0.89	0.859	1.89
HR32212J	131000	29500	167000	37500	3400	4500	24.1	0.95	1.18	2.60
HR32213J	157000	35000	202000	45500	3000	4000	27.1	1.07	1.55	3.42
HR32214J	157000	35500	205000	46000	2800	4000	28.6	1.13	1.66	3.66
HR32215J	165000	37000	219000	49500	2800	3800	29.8	1.17	1.72	3.79
HR32216J	192000	43500	254000	57000	2600	3400	30.6	1.20	2.13	4.70
HR32217J	210000	47500	277000	62000	2400	3200	33.8	1.33	2.64	5.82
HR32218J	256000	57500	350000	78500	2200	3000	36.1	1.42	3.41	7.52
HR32219J	289000	65000	400000	89500	2200	2800	39.3	1.55	4.22	9.30
HR32220J	325000	73000	450000	102000	2000	2600	41.5	1.63	5.05	11.1
HR32221J	360000	81500	510000	115000	1900	2600	44.8	1.76	6.25	13.8
HR32222J	400000	89500	565000	127000	1800	2400	47.2	1.86	7.35	16.2
HR32224J	440000	98500	635000	143000	1600	2200	52.0	2.05	9.00	19.8
HR32226J	530000	119000	790000	178000	1500	2000	56.9	2.24	11.3	24.9
HR32228J	610000	137000	915000	206000	1400	1900	60.5	2.38	14.3	31.5
HR32230J	705000	158000	1080000	242000	1300	1800	64.7	2.55	17.8	39.2
HR32232J	795000	178000	1220000	275000	1200	1600	70.5	2.78	22.7	50.0
HR32234J	930000	209000	1450000	325000	1100	1500	76.4	3.01	28.0	61.7
HR32236J	960000	216000	1540000	345000	1100	1400	78.8	3.10	29.8	65.7
HR32238J	1110000	250000	1770000	400000	1000	1400	80.5	3.17	35.2	77.6
HR32240J	1210000	271000	1920000	430000	950	1300	85.1	3.35	42.6	93.9
32244	1340000	300000	2210000	495000	850	1100	93.0	3.66	57.4	127
32248	1630000	365000	2730000	615000	750	1000	102.5	4.04	78.0	172
32252	1900000	430000	3300000	740000	670	950	116.0	4.57	103	227
32256	1950000	440000	3450000	780000	630	850	123.0	4.84	109	240
32260	2220000	500000	3700000	835000	600	800	131.6	5.18	132	291
32264	2860000	645000	5050000	1140000	530	750	141.6	5.57	175	386

C_r = Dynamic Radial Load Rating C_{or} = Static Radial Load Rating

TAPERED ROLLER BEARINGS: 32300 METRIC SERIES

BORE DIAMETER 17 - 240 MM, 0.6693 – 9.4488 INCH

Bearing Number	Nominal Bearing Dimensions										Preferred Shoulder Diameters									
	d		D		T		B		C		r* (Shaft) max		r* (Housing) max		d_a min		d_b max		D_a max	
	mm	inch	mm	inch	mm	inch	mm	inch	mm	inch	mm	inch	mm	inch	mm	inch	mm	inch	mm	inch
HR32303J	17	0.6693	47	1.8504	20.25	0.7972	19	0.7480	16	0.6299	1.0	0.039	1.0	0.039	28	1.11	23	0.90	41	1.61
HR32304J	20	0.7874	52	2.0472	22.25	0.8760	21	0.8268	18	0.7087	1.5	0.059	1.5	0.059	33	1.30	26	1.02	43	1.69
HR32305J	25	0.9843	62	2.4409	25.25	0.9941	24	0.9449	20	0.7874	1.5	0.059	1.5	0.059	38	1.50	32	1.25	53	2.08
HR32306J	30	1.1811	72	2.8346	28.75	1.1319	27	1.0630	23	0.9055	1.5	0.059	1.5	0.059	43	1.70	38	1.49	63	2.48
HR32307J	35	1.3780	80	3.1496	32.75	1.2894	31	1.2205	25	0.9843	2.0	0.078	1.5	0.059	49	1.93	43	1.69	71	2.79
HR32308J	40	1.5748	90	3.5433	35.25	1.3878	33	1.2992	27	1.0630	2.0	0.078	1.5	0.059	54	2.13	50	1.96	81	3.18
HR32309J	45	1.7717	100	3.9370	38.25	1.5059	36	1.4173	30	1.1811	2.0	0.078	1.5	0.059	59	2.33	56	2.20	91	3.58
HR32310J	50	1.9685	110	4.3307	42.25	1.6634	40	1.5748	33	1.2992	2.0	0.078	2.0	0.078	68	2.68	62	2.44	100	3.93
HR32311J	55	2.1654	120	4.7244	45.5	1.7913	43	1.6929	35	1.3780	2.0	0.078	2.0	0.078	73	2.88	67	2.63	110	4.33
HR32312J	60	2.3622	130	5.1181	48.5	1.9094	46	1.8110	37	1.4567	2.5	0.098	2.0	0.078	81	3.19	74	2.91	118	4.64
HR32313J	65	2.5591	140	5.5118	51	2.0079	48	1.8898	39	1.5354	2.5	0.098	2.0	0.078	86	3.39	80	3.14	128	5.03
HR32314J	70	2.7559	150	5.9055	54	2.1260	51	2.0079	42	1.6535	2.5	0.098	2.0	0.078	91	3.59	86	3.38	138	5.43
HR32315J	75	2.9528	160	6.2992	58	2.2835	55	2.1654	45	1.7717	2.5	0.098	2.0	0.078	96	3.78	91	3.58	148	5.82
HR32316J	80	3.1496	170	6.6929	61.5	2.4213	58	2.2835	48	1.8898	2.5	0.098	2.0	0.078	101	3.98	98	3.85	158	6.22
HR32317J	85	3.3465	180	7.0866	63.5	2.5000	60	2.3622	49	1.9291	3	0.118	2.5	0.098	110	4.34	104	4.09	166	6.53
HR32318J	90	3.5433	190	7.4803	67.5	2.6575	64	2.5197	53	2.0866	3	0.118	2.5	0.098	115	4.53	109	4.29	176	6.92
HR32319J	95	3.7402	200	7.8740	71.5	2.8150	67	2.6378	55	2.1654	3	0.118	2.5	0.098	120	4.73	115	4.52	186	7.32
HR32320J	100	3.9370	215	8.4646	77.5	3.0512	73	2.8740	60	2.3622	3	0.118	2.5	0.098	125	4.93	125	4.92	201	7.91
HR32321J	105	4.1339	225	8.8583	81.5	3.2087	77	3.0315	63	2.4803	3	0.118	2.5	0.098	130	5.12	129	5.07	211	8.30
HR32322J	110	4.3307	240	9.4488	84.5	3.3268	80	3.1496	65	2.5591	3	0.118	2.5	0.098	135	5.32	139	5.47	226	8.89
HR32324J	120	4.7244	260	10.2362	90.5	3.5630	86	3.3858	69	2.7165	3	0.118	2.5	0.098	145	5.71	149	5.86	246	9.68
32326	130	5.1181	280	11.0236	98.75	3.8878	93	3.6614	78	3.0709	4	0.157	3	0.118	162	6.38	165	6.49	262	10.31
32328	140	5.5118	300	11.8110	107.75	4.2421	102	4.0157	85	3.3465	4	0.157	3	0.118	172	6.78	177	6.96	282	11.10
32330	150	5.9055	320	12.5984	114	4.4882	108	4.2520	90	3.5433	4	0.157	3	0.118	182	7.17	191	7.51	302	11.88
32332	160	6.2992	340	13.3858	121	4.7638	114	4.4882	95	3.7402	4	0.157	3	0.118	192	7.56	202	7.95	322	12.67
32334	170	6.6929	360	14.1732	127	5.0000	120	4.7244	100	3.9370	4	0.157	3	0.118	202	7.96	213	8.38	342	13.46
32336	180	7.0866	380	14.9606	134	5.2756	126	4.9606	106	4.1732	4	0.157	3	0.118	212	8.35	225	8.85	362	14.25
32340	200	7.8740	420	16.5354	146	5.7480	138	5.4331	115	4.5276	5	0.196	4	0.157	239	9.41	253	9.96	398	15.66
32344	220	8.6614	460	18.1102	154	6.0630	145	5.7087	122	4.8031	5	0.196	4	0.157	259	10.20	274	10.78	438	17.24
32348	240	9.4488	500	19.6850	165	6.4961	155	6.1024	132	5.1969	5	0.196	4	0.157	279	10.99	301	11.85	478	18.81

*Maximum fillet which corner radius of bearing will clear.

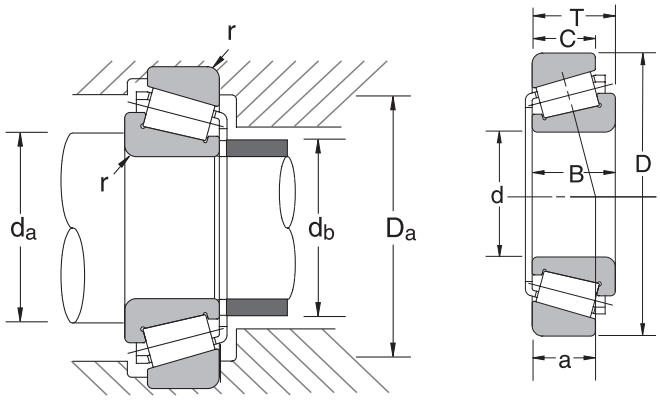

Bearing Number	Basic Load Ratings				Limiting Speeds (RPM)		Effective Load Center (a)		Bearing Weight (Approx.)	
	C_r		C_{or}		Grease	Oil	mm	inch	kg	lbs
	N	lbs	N	lbs						
HR32303J	37500	8400	36500	8250	8740	11860	12.5	0.49	0.178	0.392
HR32304J	45500	10300	47500	10700	8000	11000	13.9	0.55	0.241	0.531
HR32305J	62500	14100	66000	14800	6300	8500	15.6	0.61	0.376	0.829
HR32306J	80000	17900	88500	19900	5600	7500	18.0	0.71	0.570	1.26
HR32307J	99000	22200	111000	25000	5000	6700	20.7	0.81	0.765	1.69
HR32308J	120000	26900	145000	32500	4300	6000	23.4	0.92	1.05	2.31
HR32309J	144000	32500	177000	39500	3800	5300	25.0	0.98	1.42	3.13
HR32310J	176000	39500	220000	49500	3600	4800	27.9	1.10	1.88	4.14
HR32311J	204000	46000	258000	58000	3200	4300	29.9	1.18	2.39	5.27
HR32312J	233000	52500	295000	66500	3000	4000	31.4	1.24	2.96	6.53
HR32313J	267000	60000	340000	77000	2800	3800	34.0	1.34	3.60	7.94
HR32314J	300000	67500	390000	87500	2600	3400	36.0	1.42	4.35	9.59
HR32315J	340000	77000	445000	100000	2400	3200	38.9	1.53	5.31	11.7
HR32316J	385000	86000	505000	113000	2200	3000	41.3	1.63	6.35	14.0
HR32317J	410000	92000	535000	121000	2000	2800	43.5	1.71	7.31	16.1
HR32318J	450000	101000	590000	133000	2000	2600	46.5	1.83	8.60	19.0
HR32319J	525000	118000	710000	160000	1900	2600	48.6	1.91	10.4	22.9
HR32320J	565000	127000	755000	170000	1700	2400	53.2	2.09	12.7	28.0
HR32321J	670000	150000	925000	208000	1700	2200	55.2	2.17	14.9	32.8
HR32322J	675000	152000	910000	205000	1500	2000	58.5	2.30	17.1	37.7
HR32324J	770000	174000	1060000	237000	1400	1900	62.4	2.46	21.8	48.1
32326	830000	187000	1150000	258000	1300	1800	69.2	2.72	26.6	58.6
32328	985000	222000	1440000	325000	1200	1600	76.4	3.01	33.9	74.7
32330	1120000	251000	1700000	385000	1100	1500	81.5	3.21	41.4	91.3
32332	1210000	271000	1770000	400000	1000	1400	87.1	3.43	48.3	106
32334	1370000	310000	2050000	460000	1000	1300	91.3	3.59	57.0	126
32336	1520000	340000	2290000	515000	950	1300	96.6	3.80	66.8	147
32340	1820000	410000	2870000	645000	800	1100	106.7	4.20	90.9	200
32344	2020000	455000	3200000	715000	750	1000	114.9	4.52	114	251
32348	2520000	565000	4100000	920000	670	900	123.2	4.85	145	320

C_r = Dynamic Radial Load Rating C_{or} = Static Radial Load Rating

TAPERED ROLLER BEARINGS: 32900 METRIC SERIES

BORE DIAMETER 30 - 400 MM, 1.1811 – 15.7480 INCH

Bearing Number	Nominal Bearing Dimensions										Preferred Shoulder Diameters									
	d		D		T		B		C		r* (Shaft) max		r* (Housing) max		d_a min		d_b max		D_a max	
	mm	inch	mm	inch	mm	inch	mm	inch	mm	inch	mm	inch	mm	inch	mm	inch	mm	inch	mm	inch
HR32906J	30	1.1811	47	1.8504	12	0.4724	12	0.4724	9	0.3543	0.3	0.011	0.3	0.011	34	1.34	34	1.33	44	1.73
HR32907J	35	1.3780	55	2.1654	14	0.5512	14	0.5512	11.5	0.4528	0.6	0.023	0.6	0.023	43	1.70	40	1.57	50	1.96
HR32908J	40	1.5748	62	2.4409	15	0.5906	15	0.5906	12	0.4724	0.6	0.023	0.6	0.023	48	1.89	44	1.73	57	2.24
HR32909J	45	1.7717	68	2.6772	15	0.5906	15	0.5906	12	0.4724	0.6	0.023	0.6	0.023	53	2.09	50	1.96	63	2.48
HR32910J	50	1.9685	72	2.8346	15	0.5906	15	0.5906	12	0.4724	0.6	0.023	0.6	0.023	58	2.29	54	2.12	67	2.63
HR32911J	55	2.1654	80	3.1496	17	0.6693	17	0.6693	14	0.5512	1.0	0.039	1.0	0.039	64	2.52	60	2.36	74	2.91
HR32912J	60	2.3622	85	3.3465	17	0.6693	17	0.6693	14	0.5512	1.0	0.039	1.0	0.039	69	2.72	65	2.55	79	3.11
HR32913J	65	2.5591	90	3.5433	17	0.6693	17	0.6693	14	0.5512	1.0	0.039	1.0	0.039	74	2.92	70	2.75	84	3.30
HR32914J	70	2.7559	100	3.9370	20	0.7874	20	0.7874	16	0.6299	1.0	0.039	1.0	0.039	79	3.12	76	2.99	94	3.70
HR32915J	75	2.9528	105	4.1339	20	0.7874	20	0.7874	16	0.6299	1.0	0.039	1.0	0.039	84	3.31	81	3.18	99	3.89
HR32916J	80	3.1496	110	4.3307	20	0.7874	20	0.7874	16	0.6299	1.0	0.039	1.0	0.039	89	3.51	85	3.34	104	4.09
HR32917J	85	3.3465	120	4.7244	23	0.9055	23	0.9055	18	0.7087	1.5	0.059	1.5	0.059	96	3.78	92	3.62	111	4.37
HR32918J	90	3.5433	125	4.9213	23	0.9055	23	0.9055	18	0.7087	1.5	0.059	1.5	0.059	101	3.98	97	3.81	116	4.56
HR32919J	95	3.7402	130	5.1181	23	0.9055	23	0.9055	18	0.7087	1.5	0.059	1.5	0.059	106	4.18	102	4.01	121	4.76
HR32920J	100	3.9370	140	5.5118	25	0.9843	25	0.9843	20	0.7874	1.5	0.059	1.5	0.059	111	4.38	109	4.29	132	5.19
HR32921J	105	4.1339	145	5.7087	25	0.9843	25	0.9843	20	0.7874	1.5	0.059	1.5	0.059	116	4.57	114	4.48	137	5.39
HR32922J	110	4.3307	150	5.9055	25	0.9843	25	0.9843	20	0.7874	1.5	0.059	1.5	0.059	121	4.77	119	4.68	142	5.59
HR32924J	120	4.7244	165	6.4961	29	1.1417	29	1.1417	23	0.9055	1.5	0.059	1.5	0.059	131	5.16	129	5.07	156	6.14
HR32926J	130	5.1181	180	7.0866	32	1.2598	32	1.2598	25	0.9843	2.0	0.078	1.5	0.059	142	5.60	140	5.51	170	6.69
HR32928J	140	5.5118	190	7.4803	32	1.2598	32	1.2598	25	0.9843	2.0	0.078	1.5	0.059	152	5.99	150	5.90	180	7.08
HR32930J	150	5.9055	210	8.2677	38	1.4961	38	1.4961	30	1.1811	2.0	0.078	2.0	0.078	165	6.50	163	6.41	198	7.79
HR32932J	160	6.2992	220	8.6614	38	1.4961	38	1.4961	30	1.1811	2.0	0.078	2.0	0.078	175	6.89	173	6.81	208	8.18
HR32934J	170	6.6929	230	9.0551	38	1.4961	38	1.4961	30	1.1811	2.0	0.078	2.0	0.078	185	7.29	180	7.08	218	8.58
HR32936J	180	7.0866	250	9.8425	45	1.7717	45	1.7717	34	1.3386	2.0	0.078	2.0	0.078	195	7.68	192	7.55	240	9.44
HR32938J	190	7.4803	260	10.2362	45	1.7717	45	1.7717	34	1.3386	2.0	0.078	2.0	0.078	205	8.08	201	7.91	250	9.84
HR32940J	200	7.8740	280	11.0236	51	2.0079	51	2.0079	39	1.5354	2.5	0.098	2.0	0.078	205	8.08	201	7.91	250	9.84
HR32944J	220	8.6614	300	11.8110	51	2.0079	51	2.0079	39	1.5354	2.5	0.098	2.0	0.078	238	9.38	235	9.25	288	11.33
HR32948J	240	9.4488	320	12.5984	51	2.0079	51	2.0079	39	1.5354	2.5	0.098	2.0	0.078	258	10.16	255	10.03	308	12.12
HR32952J	260	10.2362	360	14.1732	63.5	2.5000	63.5	2.5000	48	1.8898	2.5	0.098	2.0	0.078	278	10.95	278	10.94	348	13.70
HR32956J	280	11.0236	380	14.9606	63.5	2.5000	63.5	2.5000	48	1.8898	2.5	0.098	2.0	0.078	298	11.74	297	11.69	368	14.48
HR32960J	300	11.8110	420	16.5354	76	2.9921	76	2.9921	57	2.2441	3.0	0.118	2.5	0.098	321	12.64	324	12.75	406	15.98
HR32964J	320	12.5984	440	17.3228	76	2.9921	72	2.8346	63	2.4803	3.0	0.118	2.5	0.098	341	13.43	344	13.54	426	16.77
HR32968J	340	13.3858	460	18.1102	76	2.9921	76	2.9921	57	2.2441	3.0	0.118	2.5	0.098	361	14.22	362	14.25	446	17.55
HR32972J	360	14.1732	480	18.8976	76	2.9921	76	2.9921	57	2.2441	3.0	0.118	2.5	0.098	381	15.00	381	15.00	466	18.34
32976	380	14.9606	520	20.4724	87	3.4252	82	3.2283	71	2.7953	4.0	0.157	3.0	0.118	407	16.03	406	15.98	502	19.76
32980	400	15.7480	540	21.2598	87	3.4252	82	3.2283	71	2.7953	4.0	0.157	3.0	0.118	427	16.82	428	16.85	522	20.55

*Maximum fillet which corner radius of bearing will clear.

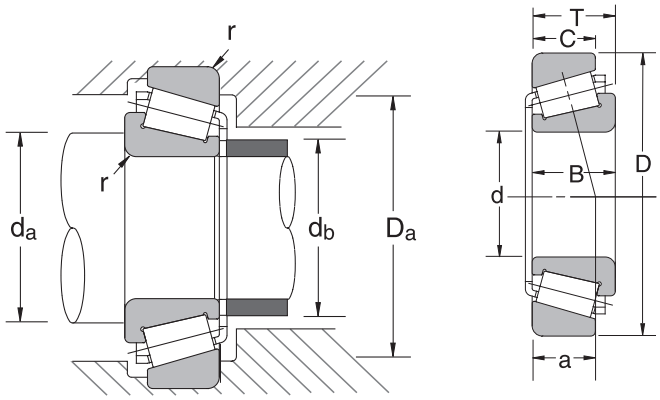

Bearing Number	Basic Load Ratings				Limiting Speeds (RPM)		Effective Load Center (a)		Bearing Weight (Approx.)	
	C_r		C_{or}		Grease	Oil	mm	inch	kg	lbs
	N	lbs	N	lbs						
HR32906J	17600	3950	24400	5500	7500	10000	9.2	0.36	0.074	0.163
HR32907J	27400	6150	39000	8750	6300	8500	10.7	0.42	0.123	0.271
HR32908J	34000	7600	47000	10600	5600	7500	11.5	0.45	0.161	0.355
HR32909J	34500	7800	50500	11300	5000	6700	12.3	0.48	0.187	0.412
HR32910J	36000	8100	54000	12200	4500	6300	13.5	0.53	0.193	0.425
HR32911J	45500	10200	74500	16800	4300	5600	14.6	0.57	0.282	0.622
HR32912J	49000	11000	84500	19000	3800	5300	15.5	0.61	0.306	0.675
HR32913J	49000	11000	86500	19400	3600	5000	16.8	0.66	0.323	0.712
HR32914J	70000	15700	113000	25400	3200	4500	17.6	0.69	0.494	1.09
HR32915J	72500	16300	120000	27100	3200	4300	18.7	0.74	0.530	1.17
HR32916J	75000	16800	128000	28800	3000	4500	19.8	0.78	0.560	1.23
HR32917J	93500	21000	157000	35300	3200	4300	20.9	0.82	0.800	1.76
HR32918J	97000	21800	167000	37500	3000	4000	22.0	0.87	0.838	1.85
HR32919J	98000	22000	172000	38500	2800	3800	23.2	0.91	0.877	1.93
HR32920J	117000	26400	205000	46000	2600	3600	24.2	0.95	1.18	2.60
HR32921J	119000	26700	212000	47500	2400	3400	25.3	1.00	1.23	2.71
HR32922J	123000	27600	224000	50500	2200	3200	26.5	1.04	1.29	2.84
HR32924J	161000	36000	291000	65500	2200	3000	29.2	1.15	1.80	3.97
HR32926J	200000	45000	365000	82500	2200	2800	31.4	1.24	2.46	5.42
HR32928J	206000	46500	390000	87500	1900	2600	33.6	1.32	2.64	5.82
HR32930J	281000	63000	520000	117000	1500	2000	36.5	1.44	4.05	8.93
HR32932J	296000	66500	570000	128000	1400	1900	38.7	1.52	4.32	9.52
HR32934J	294000	66000	560000	126000	1400	1800	41.7	1.64	4.44	9.79
HR32936J	350000	79000	685000	154000	1300	1700	53.9	2.12	6.56	14.5
HR32938J	365000	81500	715000	161000	1200	1600	55.3	2.18	6.83	15.1
HR32940J	480000	107000	935000	210000	1100	1500	54.2	2.13	9.65	21.3
HR32944J	490000	110000	990000	223000	1000	1400	59.2	2.33	10.3	22.7
HR32948J	500000	112000	1040000	235000	900	1300	65.1	2.56	11.1	24.5
HR32952J	730000	164000	1450000	325000	800	1100	69.8	2.75	18.6	41.0
HR32956J	765000	172000	1580000	355000	800	1100	75.3	2.96	20.0	44.1
HR32960J	1010000	227000	2100000	470000	700	1000	79.9	3.15	31.4	69.2
HR32964J	1040000	234000	2220000	500000	700	900	85.0	3.35	33.3	73.4
HR32968J	1050000	236000	2220000	500000	600	800	91.0	3.58	34.3	75.6
HR32972J	1080000	242000	2340000	525000	600	800	96.8	3.81	36.1	79.6
32976	1210000	273000	2550000	575000	550	740	95.2	3.75	49.5	109
32980	1250000	281000	2700000	610000	520	700	100.8	3.97	52.7	116

C_r = Dynamic Radial Load Rating C_{or} = Static Radial Load Rating

TAPERED ROLLER BEARINGS: 33000 METRIC SERIES

BORE DIAMETER 25 - 120 MM, 0.9843 – 4.7244 INCH

Bearing Number	Nominal Bearing Dimensions										Preferred Shoulder Diameters									
	d		D		T		B		C		r* (Shaft) max		r* (Housing) max		d_a min		d_b max		D_a max	
	mm	inch	mm	inch	mm	inch	mm	inch	mm	inch	mm	inch	mm	inch	mm	inch	mm	inch	mm	inch
HR33005J	25	0.9843	47	1.8504	17	0.6693	17	0.6693	14	0.5512	0.6	0.023	0.6	0.023	33	1.30	29	1.14	42	1.65
HR33006J	30	1.1811	55	2.1654	20	0.7874	20	0.7874	16	0.6299	1.0	0.039	1.0	0.039	39	1.54	35	1.37	49	1.92
HR33007J	35	1.3780	62	2.4409	21	0.8268	21	0.8268	17	0.6693	1.0	0.039	1.0	0.039	44	1.74	40	1.57	56	2.20
HR33008J	40	1.5748	68	2.6772	22	0.8661	22	0.8661	18	0.7087	1.0	0.039	1.0	0.039	49	1.93	45	1.77	62	2.44
HR33009J	45	1.7717	75	2.9528	24	0.9449	24	0.9449	19	0.7480	1.0	0.039	1.0	0.039	54	2.13	51	2.00	69	2.71
HR33010J	50	1.9685	80	3.1496	24	0.9449	24	0.9449	19	0.7480	1.0	0.039	1.0	0.039	59	2.33	55	2.16	74	2.91
HR33011J	55	2.1654	90	3.5433	27	1.0630	27	1.0630	21	0.8268	1.5	0.059	1.5	0.059	66	2.60	62	2.44	81	3.18
HR33012J	60	2.3622	95	3.7402	27	1.0630	27	1.0630	21	0.8268	1.5	0.059	1.5	0.059	71	2.80	66	2.59	86	3.38
HR33013J	65	2.5591	100	3.9370	27	1.0630	27	1.0630	21	0.8268	1.5	0.059	1.5	0.059	76	3.00	71	2.79	91	3.58
HR33014J	70	2.7559	110	4.3307	31	1.2205	31	1.2205	25.5	1.0039	1.5	0.059	1.5	0.059	81	3.19	78	3.07	101	3.97
HR33015J	75	2.9528	115	4.5276	31	1.2205	31	1.2205	25.5	1.0039	1.5	0.059	1.5	0.059	86	3.39	83	3.26	106	4.17
HR33016J	80	3.1496	125	4.9213	36	1.4173	36	1.4173	29.5	1.1614	1.5	0.059	1.5	0.059	91	3.59	88	3.46	116	4.56
HR33017J	85	3.3465	130	5.1181	36	1.4173	36	1.4173	29.5	1.1614	1.5	0.059	1.5	0.059	96	3.78	94	3.70	121	4.76
HR33018J	90	3.5433	140	5.5118	39	1.5354	39	1.5354	32.5	1.2795	2	0.078	1.5	0.059	102	4.02	99	3.89	131	5.15
HR33019J	95	3.7402	145	5.7087	39	1.5354	39	1.5354	32.5	1.2795	2	0.078	1.5	0.059	107	4.22	103	4.05	136	5.35
HR33020J	100	3.9370	150	5.9055	39	1.5354	39	1.5354	32.5	1.2795	2	0.078	1.5	0.059	112	4.41	107	4.21	141	5.55
HR33021J	105	4.1339	160	6.2992	43	1.6929	43	1.6929	34	1.3386	2	0.078	2	0.078	120	4.73	115	4.52	150	5.90
HR33022J	110	4.3307	170	6.6929	47	1.8504	47	1.8504	37	1.4567	2	0.078	2	0.078	125	4.93	121	4.76	160	6.29
HR33024J	120	4.7244	180	7.0866	48	1.8898	48	1.8898	38	1.4961	2	0.078	2	0.078	135	5.32	130	5.11	168	6.61

*Maximum fillet which corner radius of bearing will clear.

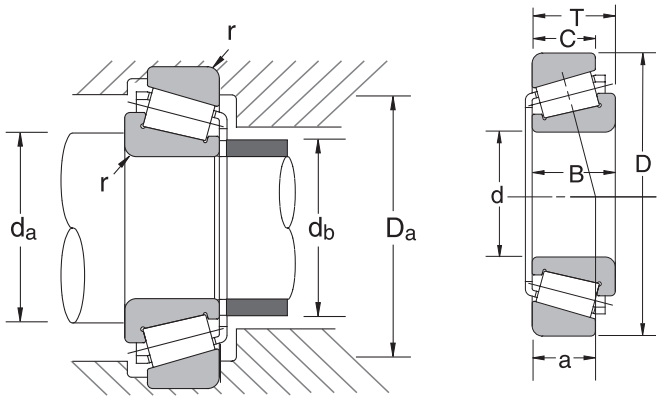

Bearing Number	Basic Load Ratings				Limiting Speeds (RPM)		Effective Load Center (a)		Bearing Weight (Approx.)	
	C_r		C_{or}		Grease	Oil	mm	inch	kg	lbs
	N	lbs	N	lbs						
HR33005J	31000	7000	38000	8600	8000	11000	11.0	0.43	0.131	0.289
HR33006J	42000	9400	54000	12100	6700	9000	13.1	0.52	0.208	0.459
HR33007J	49000	11000	65000	14600	5600	8000	14.1	0.56	0.267	0.589
HR33008J	59000	13200	81500	18300	5300	7100	14.6	0.57	0.322	0.710
HR33009J	69000	15500	99000	22300	4800	6300	16.3	0.64	0.414	0.913
HR33010J	70500	15800	104000	23400	4300	6000	17.4	0.69	0.452	0.996
HR33011J	91500	20500	138000	31000	3800	5300	19.2	0.76	0.657	1.45
HR33012J	96000	21600	150000	33500	3600	5000	20.0	0.79	0.713	1.57
HR33013J	97500	21900	156000	35000	3400	4500	21.1	0.83	0.760	1.68
HR33014J	127000	28500	204000	46000	3000	4300	22.2	0.87	1.11	2.45
HR33015J	133000	29900	220000	49500	3000	4000	23.0	0.91	1.18	2.60
HR33016J	172000	38500	282000	63500	2800	3600	25.5	1.00	1.66	3.66
HR33017J	180000	40500	305000	68500	2600	3600	26.5	1.04	1.75	3.86
HR33018J	220000	49500	360000	81000	2400	3200	27.9	1.10	2.21	4.87
HR33019J	231000	52000	390000	87500	2400	3200	28.6	1.13	2.30	5.07
HR33020J	235000	53000	405000	91000	2200	3000	29.3	1.15	2.38	5.25
HR33021J	256000	57500	435000	97500	2000	2800	30.9	1.22	3.03	6.68
HR33022J	294000	66000	515000	115000	2000	2600	33.7	1.33	3.84	8.47
HR33024J	300000	67500	540000	121000	1800	2400	36.0	1.42	4.20	9.26

C_r = Dynamic Radial Load Rating C_{or} = Static Radial Load Rating

TAPERED ROLLER BEARINGS: 33100 METRIC SERIES

BORE DIAMETER 45 - 110 MM, 1.7717 – 4.3307 INCH

Bearing Number	Nominal Bearing Dimensions										Preferred Shoulder Diameters									
	d		D		T		B		C		r* (Shaft) max		r* (Housing) max		d_a min		d_b max		D_a max	
	mm	inch	mm	inch	mm	inch	mm	inch	mm	inch	mm	inch	mm	inch	mm	inch	mm	inch	mm	inch
HR33109J	45	1.7717	80	3.1496	26	1.0236	26	1.0236	20.5	0.8071	1.5	0.059	1.5	0.059	56	2.21	51	2.00	71	2.79
HR33110J	50	1.9685	85	3.3465	26	1.0236	26	1.0236	20	0.7874	1.5	0.059	1.5	0.059	61	2.41	56	2.20	76	2.99
HR33111J	55	2.1654	95	3.7402	30	1.1811	30	1.1811	23	0.9055	1.5	0.059	1.5	0.059	66	2.60	62	2.44	86	3.38
HR33112J	60	2.3622	100	3.9370	30	1.1811	30	1.1811	23	0.9055	1.5	0.059	1.5	0.059	71	2.80	68	2.67	91	3.58
HR33113J	65	2.5591	110	4.3307	34	1.3386	34	1.3386	26.5	1.0433	1.5	0.059	1.5	0.059	76	3.00	73	2.87	101	3.97
HR33114J	70	2.7559	120	4.7244	37	1.4567	37	1.4567	29	1.1417	2	0.078	1.5	0.059	82	3.23	79	3.11	111	4.37
HR33115J	75	2.9528	125	4.9213	37	1.4567	37	1.4567	29	1.1417	2	0.078	1.5	0.059	87	3.43	83	3.26	115	4.52
HR33116J	80	3.1496	130	5.1181	37	1.4567	37	1.4567	29	1.1417	2	0.078	1.5	0.059	82	3.23	88	3.46	121	4.76
HR33117J	85	3.3465	140	5.5118	41	1.6142	41	1.6142	32	1.2598	2	0.078	2	0.078	100	3.94	94	3.70	130	5.11
HR33118J	90	3.5433	150	5.9055	45	1.7717	45	1.7717	35	1.3780	2	0.078	2	0.078	105	4.14	100	3.93	140	5.51
HR33120J	100	3.9370	165	6.4961	52	2.0472	52	2.0472	40	1.5748	2	0.078	2	0.078	115	4.53	110	4.33	155	6.10
HR33122J	110	4.3307	180	7.0866	56	2.2047	56	2.2047	43	1.6929	2	0.078	2	0.078	125	4.93	121	4.76	170	6.69

*Maximum fillet which corner radius of bearing will clear.

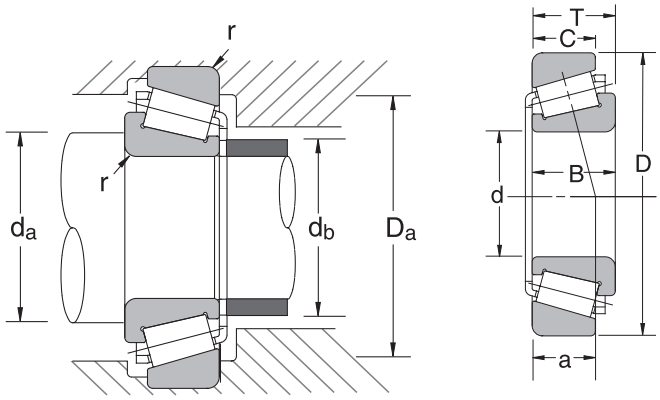

Bearing Number	Basic Load Ratings				Limiting Speeds (RPM)		Effective Load Center (a)		Bearing Weight (Approx.)	
	C_r		C_{or}		Grease	Oil	mm	inch	kg	lbs
	N	lbs	N	lbs						
HR33109J	84000	18900	113000	25500	4500	6000	19.1	0.75	0.552	1.22
HR33110J	89000	20000	126000	28300	4300	5600	20.3	0.80	0.597	1.32
HR33111J	112000	25300	158000	35500	3800	5000	22.4	0.88	0.877	1.93
HR33112J	115000	25900	166000	37500	3400	4800	23.6	0.93	0.910	2.01
HR33113J	148000	33500	218000	49000	3200	4300	26.0	1.02	1.32	2.91
HR33114J	177000	40000	262000	59000	3000	4000	27.9	1.10	1.71	3.77
HR33115J	182000	41000	275000	62000	2800	3800	29.1	1.15	1.80	3.97
HR33116J	186000	42000	289000	65000	2600	3600	30.4	1.20	1.88	4.14
HR33117J	230000	51500	365000	81500	2400	3400	32.7	1.29	2.51	5.53
HR33118J	259000	58500	405000	91000	2400	3200	35.2	1.39	3.14	6.92
HR33120J	315000	71500	515000	116000	2100	2800	40.5	1.59	4.32	9.52
HR33122J	365000	82000	610000	137000	1900	2600	44.1	1.74	5.54	12.2

C_r = Dynamic Radial Load Rating C_{or} = Static Radial Load Rating

TAPERED ROLLER BEARINGS: 33200 METRIC SERIES

BORE DIAMETER 25 - 100 MM, 0.9843 – 3.9370 INCH

Bearing Number	Nominal Bearing Dimensions										Preferred Shoulder Diameters									
	d		D		T		B		C		r* (Shaft) max		r* (Housing) max		d_a min		d_b max		D_a max	
	mm	inch	mm	inch	mm	inch	mm	inch	mm	inch	mm	inch	mm	inch	mm	inch	mm	inch	mm	inch
HR33205J	25	0.9843	52	2.0472	22	0.8661	22	0.8661	18.0	0.7087	1.0	0.039	1.0	0.039	34	1.34	29	1.14	46	1.81
HR33206J	30	1.1811	62	2.4409	25	0.9843	25	0.9843	19.5	0.7677	1.0	0.039	1.0	0.039	39	1.54	35	1.37	56	2.20
HR33207J	35	1.3780	72	2.8346	28	1.1024	28	1.1024	22.0	0.8661	1.5	0.059	1.5	0.059	46	1.82	41	1.61	63	2.48
HR33208J	40	1.5748	80	3.1496	32	1.2598	32	1.2598	25.0	0.9843	1.5	0.059	1.5	0.059	51	2.01	46	1.81	71	2.79
HR33209J	45	1.7717	85	3.3465	32	1.2598	32	1.2598	25.0	0.9843	1.5	0.059	1.5	0.059	56	2.21	51	2.00	76	2.99
HR33210J	50	1.9685	90	3.5433	32	1.2598	32	1.2598	24.5	0.9646	1.5	0.059	1.5	0.059	61	2.41	56	2.20	81	3.18
HR33211J	55	2.1654	100	3.9370	35	1.3780	35	1.3780	27	1.0630	2.0	0.078	1.5	0.059	67	2.64	62	2.44	91	3.58
HR33212J	60	2.3622	110	4.3307	38	1.4961	38	1.4961	29	1.1417	2.0	0.078	1.5	0.059	72	2.84	68	2.67	101	3.97
HR33213J	65	2.5591	120	4.7244	41	1.6142	41	1.6142	32	1.2598	2.0	0.078	1.5	0.059	77	3.04	74	2.91	111	4.37
HR33214J	70	2.7559	125	4.9213	41	1.6142	41	1.6142	32	1.2598	2.0	0.078	1.5	0.059	82	3.23	78	3.07	116	4.56
HR33215J	75	2.9528	130	5.1181	41	1.6142	41	1.6142	31	1.2205	2.0	0.078	1.5	0.059	87	3.43	83	3.26	121	4.76
HR33216J	80	3.1496	140	5.5118	46	1.8110	46	1.8110	35	1.3780	2.0	0.078	2.0	0.078	95	3.75	89	3.50	130	5.11
HR33217J	85	3.3465	150	5.9055	49	1.9291	49	1.9291	37	1.4567	2.0	0.078	2.0	0.078	100	3.94	95	3.74	140	5.51
HR33220J	100	3.9370	180	7.0866	63	2.4803	63	2.4803	48	1.8898	2.5	0.098	2.0	0.078	118	4.65	113	4.44	168	6.61

*Maximum fillet which corner radius of bearing will clear.

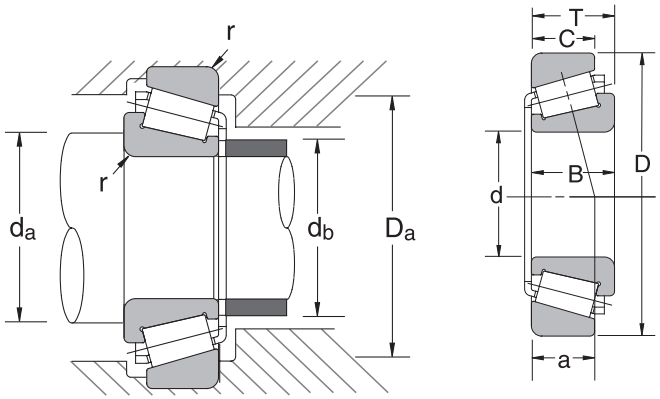

Bearing Number	Basic Load Ratings				Limiting Speeds (RPM)		Effective Load Center (a)		Bearing Weight (Approx.)	
	C_r		C_{or}		Grease	Oil	mm	inch	kg	lbs
	N	lbs	N	lbs						
HR33205J	47500	10700	56500	12700	7500	10000	14.1	0.56	0.221	0.487
HR33206J	66500	15000	79500	17900	6000	8000	16.1	0.63	0.355	0.783
HR33207J	86500	19500	108000	24400	5300	7100	18.3	0.72	0.540	1.19
HR33208J	107000	24000	137000	31000	4800	6300	20.8	0.82	0.744	1.64
HR33209J	111000	24800	147000	33000	4300	6000	22.0	0.87	0.817	1.80
HR33210J	118000	26600	165000	37000	4000	5300	23.2	0.91	0.867	1.91
HR33211J	141000	31500	193000	43500	3600	5000	25.2	0.99	1.18	2.60
HR33212J	166000	37500	231000	52000	3400	4500	27.6	1.09	1.56	3.44
HR33213J	202000	45500	282000	63500	3000	4000	29.2	1.15	2.04	4.50
HR33214J	209000	47000	299000	67000	2800	4000	30.4	1.20	2.15	4.74
HR33215J	215000	48500	315000	71000	2800	3800	31.6	1.24	2.25	4.96
HR33216J	256000	57500	385000	86000	2600	3400	34.8	1.37	2.93	6.46
HR33217J	281000	63500	41500	93000	2400	3200	37.3	1.47	3.57	7.87
HR33220J	410000	92500	635000	143000	1970	2670	45.9	1.81	6.76	14.9

C_r = Dynamic Radial Load Rating C_{or} = Static Radial Load Rating

TAPERED ROLLER BEARINGS: METRIC SERIES – MEDIUM ANGLE 30200C SERIES

BORE DIAMETER 20 - 85 MM, 0.7874 – 3.3465 INCH

Bearing Number	Nominal Bearing Dimensions										Preferred Shoulder Diameters									
	d		D		T		B		C		r* (Shaft) max		r* (Housing) max		d_a min		d_b max		D_a max	
	mm	inch	mm	inch	mm	inch	mm	inch	mm	inch	mm	inch	mm	inch	mm	inch	mm	inch	mm	inch
30204C	20	0.7874	47	1.8504	15.25	0.6004	14	0.5512	12	0.4724	1.0	0.039	1.0	0.039	29	1.15	26	1.02	41	1.61
302/22C	22	0.8661	50	1.9685	15.25	0.6004	14	0.5512	12	0.4724	1.0	0.039	1.0	0.039	31	1.23	29	1.14	44	1.73
30205C	25	0.9843	52	2.0472	16.25	0.6398	15	0.5906	12	0.4724	1.0	0.039	1.0	0.039	34	1.34	32	1.25	46	1.81
302/28C	28	1.1024	58	2.2835	17.25	0.6791	16	0.6299	12	0.4724	1.0	0.039	1.0	0.039	37	1.46	34	1.33	52	2.04
30206C	30	1.1811	62	2.4409	17.25	0.6791	16	0.6299	12	0.4724	1.0	0.039	1.0	0.039	39	1.54	36	1.41	56	2.20
302/32C	32	1.2598	65	2.5591	18.25	0.7185	17	0.6693	13	0.5118	1.0	0.039	1.0	0.039	41	1.62	39	1.53	59	2.32
30207C	35	1.3780	72	2.8346	18.25	0.7185	17	0.6693	13	0.5118	1.5	0.059	1.5	0.059	46	1.82	44	1.73	63	2.48
30208C	40	1.5748	80	3.1496	19.75	0.7776	18	0.7087	14	0.5512	1.5	0.059	1.5	0.059	51	2.01	49	1.92	71	2.79
30209C	45	1.7717	85	3.3465	20.75	0.8169	19	0.7480	15	0.5906	1.5	0.059	1.5	0.059	56	2.21	52	2.04	76	2.99
30210C	50	1.9685	90	3.5433	21.75	0.8563	20	0.7874	16	0.6299	1.5	0.059	1.5	0.059	61	2.41	58	2.28	81	3.18
30216C	80	3.1496	140	5.5118	28.25	1.1122	26	1.0236	20	0.7874	2.0	0.078	2.0	0.078	95	3.75	92	3.62	130	5.11
30217C	85	3.3465	150	5.9055	30.5	1.2008	28	1.1024	22	0.8661	2.0	0.078	2.0	0.078	100	3.94	98	3.85	140	5.51

*Maximum fillet which corner radius of bearing will clear.

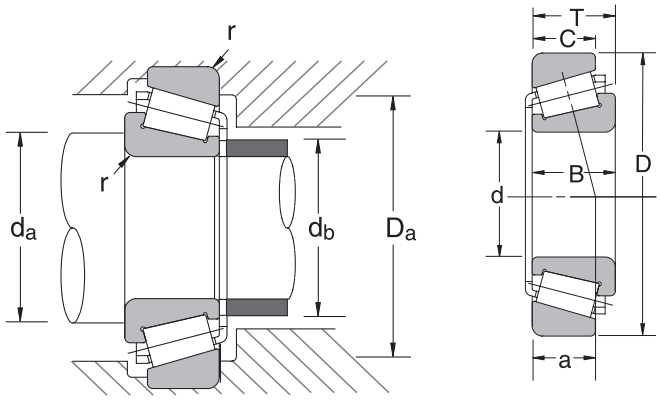

Bearing Number	Basic Load Ratings				Limiting Speeds (RPM)		Effective Load Center (a)		Bearing Weight (Approx.)	
	C_r		C_{or}		Grease	Oil	mm	inch	kg	lbs
	N	lbs	N	lbs						
23900	23900	5350	24000	5400	8000	11000	13.0	0.51	0.126	0.278
27200	27200	6100	29500	6650	7500	10000	15.2	0.60	0.185	0.408
28100	28100	6300	31500	7100	6700	9500	14.4	0.57	0.155	0.342
34000	34000	7650	38500	8650	6300	8500	16.9	0.67	0.198	0.437
35500	35500	8000	37000	8350	5600	7500	17.8	0.70	0.221	0.487
45500	45500	10300	52500	11800	5600	7500	16.9	0.67	0.273	0.602
47000	47000	10500	54500	12200	5000	6700	19.6	0.77	0.331	0.730
59500	59500	13300	69000	15500	4500	6000	21.6	0.85	0.424	0.935
63000	63000	14200	78500	17600	4300	5600	21.3	0.84	0.476	1.05
70000	70000	15800	93000	20900	3800	5300	24.1	0.95	0.540	1.19
131000	131000	29500	163000	36500	2600	3400	33.7	1.33	1.66	3.66
153000	153000	34500	193000	43500	2400	3200	36.2	1.43	2.07	4.56

C_r = Dynamic Radial Load Rating C_{or} = Static Radial Load Rating

TAPERED ROLLER BEARINGS:
METRIC SERIES – MEDIUM ANGLE 30300C SERIES

BORE DIAMETER 20 - 95 MM, 0.7874 – 3.7402 INCH

Bearing Number	Nominal Bearing Dimensions										Preferred Shoulder Diameters									
	d		D		T		B		C		r* (Shaft) max		r* (Housing) max		d_a min		d_b max		D_a max	
	mm	inch	mm	inch	mm	inch	mm	inch	mm	inch	mm	inch	mm	inch	mm	inch	mm	inch	mm	inch
30304C	20	0.7874	52	2.0472	16.25	0.6398	16	0.6299	12	0.4724	1.5	0.059	1.5	0.059	31	1.23	27	1.06	43	1.69
303/22C	22	0.8661	56	2.2047	17.25	0.6791	16	0.6299	13	0.5118	1.5	0.059	1.5	0.059	33	1.30	30	1.18	47	1.85
30305C	25	0.9843	62	2.4409	18.25	0.7185	17	0.6693	14	0.5512	1.5	0.059	1.5	0.059	36	1.42	35	1.37	53	2.08
303/28C	28	1.1024	68	2.6772	19.75	0.7776	18	0.7087	14	0.5512	1.5	0.059	1.5	0.059	39	1.54	38	1.49	59	2.32
30306C	30	1.1811	72	2.8346	20.75	0.8169	19	0.7480	14	0.5512	1.5	0.059	1.5	0.059	41	1.62	38	1.49	63	2.48
303/32C	32	1.2598	75	2.9528	21.75	0.8563	20	0.7874	16	0.6299	1.5	0.059	1.5	0.059	43	1.70	43	1.69	66	2.59
30307C	35	1.3780	80	3.1496	22.75	0.8957	21	0.8268	16	0.6299	2.0	0.078	1.5	0.059	47	1.86	44	1.73	71	2.79
30308C	40	1.5748	90	3.5433	25.25	0.9941	23	0.9055	18	0.7087	2.0	0.078	1.5	0.059	52	2.05	50	1.96	81	3.18
30309C	45	1.7717	100	3.9370	27.25	1.0728	25	0.9843	19	0.7480	2.0	0.078	1.5	0.059	57	2.25	57	2.24	91	3.58
30310C	50	1.9685	110	4.3307	29.25	1.1516	27	1.0630	20	0.7874	2.0	0.078	2.0	0.078	65	2.56	65	2.55	100	3.93
30314C	70	2.7559	150	5.9055	38.0	1.4961	35	1.3780	27	1.0630	2.5	0.098	2.0	0.078	88	3.47	87	3.42	138	5.43
30319C	95	3.7402	200	7.8740	49.5	1.9488	45	1.7717	36	1.4173	3.0	0.118	2.5	0.098	116	4.57	119	4.68	186	7.32

*Maximum fillet which corner radius of bearing will clear.

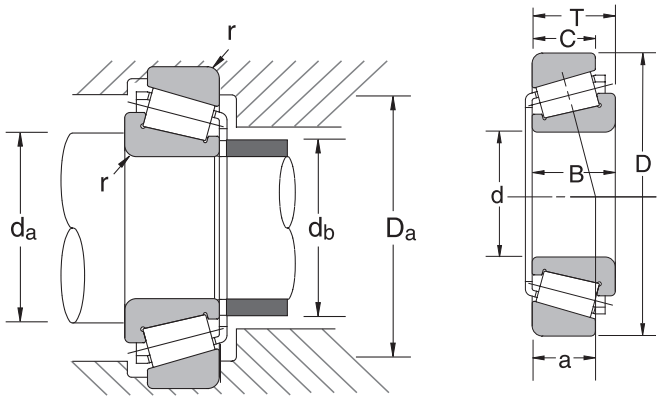

Bearing Number	Basic Load Ratings				Limiting Speeds (RPM)		Effective Load Center (a)		Bearing Weight (Approx.)	
	C_r		C_{or}		Grease	Oil	mm	inch	kg	lbs
	N	lbs	N	lbs						
30304C	31000	6970	28900	6500	7500	10000	13.5	0.53	0.168	0.370
303/22C	34500	7750	34000	7700	6700	9500	15.9	0.63	0.207	0.456
30305C	42000	9500	45000	10100	6000	8500	16.4	0.65	0.276	0.608
303/28C	49500	11100	50500	11400	5600	7500	17.4	0.69	0.335	0.739
30306C	56500	12800	55500	12500	5300	7100	18.5	0.73	0.383	0.844
303/32C	59500	13400	68500	15400	5000	6700	18.7	0.74	0.459	1.010
30307C	68000	15300	70500	15900	4800	6300	20.3	0.80	0.518	1.14
30308C	84500	19000	93500	21000	4300	5600	22.7	0.89	0.735	1.62
30309C	103000	23200	117000	26300	3600	5000	25.5	1.00	0.974	2.15
30310C	119000	26800	138000	31000	3400	4500	28.0	1.10	1.250	2.76
30314C	201000	45200	236000	53100	2400	3400	36.5	1.44	2.900	6.39
30319C	350000	78700	430000	96700	1800	2400	48.6	1.91	6.710	14.80

C_r = Dynamic Radial Load Rating C_{or} = Static Radial Load Rating

TAPERED ROLLER BEARINGS:
METRIC SERIES – MEDIUM ANGLE 32200C SERIES

BORE DIAMETER 20 - 60 MM, 0.7874 – 2.3622 INCH

Bearing Number	Nominal Bearing Dimensions										Preferred Shoulder Diameters									
	d		D		T		B		C		r* (Shaft) max		r* (Housing) max		d_a min		d_b max		D_a max	
	mm	inch	mm	inch	mm	inch	mm	inch	mm	inch	mm	inch	mm	inch	mm	inch	mm	inch	mm	inch
HR32204C	20	0.7874	47	1.8504	19.25	0.7579	18	0.7087	15	0.5906	1.0	0.039	1.0	0.039	29	1.15	25	0.98	41	1.61
HR322/22C	22	0.8661	50	1.9685	19.25	0.7579	18	0.7087	15	0.5906	1.0	0.039	1.0	0.039	31	1.23	29	1.14	44	1.73
HR32205C	25	0.9843	52	2.0472	19.25	0.7579	18	0.7087	15	0.5906	1.0	0.039	1.0	0.039	34	1.34	30	1.18	46	1.81
HR322/28C	28	1.1024	58	2.2835	20.25	0.7972	19	0.7480	15	0.5906	1.0	0.039	1.0	0.039	37	1.46	33	1.29	52	2.04
HR32206C	30	1.1811	62	2.4409	21.25	0.8366	20	0.7874	16	0.6299	1.0	0.039	1.0	0.039	39	1.54	35	1.37	56	2.20
HR322/32C	32	1.2598	65	2.5591	22.25	0.8760	21	0.8268	17	0.6693	1.0	0.039	1.0	0.039	41	1.62	39	1.53	59	2.32
HR32207C	35	1.3780	72	2.8346	24.25	0.9547	23	0.9055	18	0.7087	1.5	0.059	1.5	0.059	46	1.82	42	1.65	63	2.48
HR32208C	40	1.5748	80	3.1496	24.75	0.9744	23	0.9055	18	0.7087	1.5	0.059	1.5	0.059	51	2.01	47	1.85	71	2.79
HR32209C	45	1.7717	85	3.3465	24.75	0.9744	23	0.9055	18	0.7087	1.5	0.059	1.5	0.059	56	2.21	52	2.04	76	2.99
HR32210C	50	1.9685	90	3.5433	24.75	0.9744	23	0.9055	18	0.7087	1.5	0.059	1.5	0.059	61	2.41	58	2.28	81	3.18
32212C	60	2.3622	110	4.3307	29.75	1.1713	28	1.1024	22	0.8661	2.0	0.078	1.5	0.059	72	2.84	68	2.67	100	3.93

*Maximum fillet which corner radius of bearing will clear.

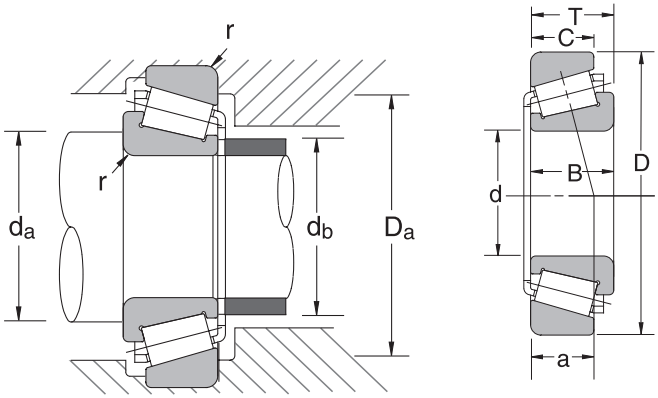

Bearing Number	Basic Load Ratings				Limiting Speeds (RPM)		Effective Load Center (a)		Bearing Weight (Approx.)	
	C_r		C_{or}		Grease	Oil	mm	inch	kg	lbs
	N	lbs	N	lbs						
HR32204C	31500	7050	33500	7550	8500	11000	14.5	0.57	0.166	0.366
HR322/22C	33500	7550	39500	8850	7500	10000	15.2	0.60	0.185	0.408
HR32205C	35000	7800	42000	9400	7100	9500	15.8	0.62	0.190	0.419
HR322/28C	42000	9450	49500	11100	6300	8500	16.8	0.66	0.251	0.553
HR32206C	48000	10800	56000	12600	6000	8000	17.8	0.70	0.293	0.646
HR322/32C	49500	11100	60000	13400	5600	7500	20.2	0.80	0.335	0.739
HR32207C	60500	13600	71500	16000	5000	7100	20.6	0.81	0.442	0.974
HR32208C	74000	16600	90500	20300	4800	6300	21.9	0.86	0.558	1.23
HR32209C	74500	16700	95000	21400	4300	6000	23.6	0.93	0.603	1.33
HR32210C	77500	17400	102000	22900	4000	5400	24.6	0.97	0.655	1.44
32212C	105000	23500	130000	29200	3400	4500	29.0	1.14	1.19	2.62

C_r = Dynamic Radial Load Rating C_{or} = Static Radial Load Rating

INCH TAPERED ROLLER BEARINGS

Prefix
EH: Extra Heavy
EL: Extra Light
H: Heavy
HH: Heavier than Heavy
HM: Heavy Medium
L: Light
LL: Lighter than Light
LM: Light Medium
M: Medium

Basic Series
1-3 digit number that identifies maximum bore range

Additional Features*
R: Conforms to ABMA Standard
G: Case Carburized Cups & Cone

*NSK uses these two standard suffixes. Either one or two letter suffixes may appear.

STF	LM	1	19	49	R

Material Prefix
HTF: High Tough
STF: Super Tough
WTF: Water Tough
Blank: Standard Materials

Code Included Cup Angle

1	0	to 23°59′59.99″
2	24°	to 25°29′59.99″
3	25°30′	to 26°59′59.99″
4	27°	to 28°29′59.99″
5	28°30′	to 30°29′59.99″
6	30°30′	to 32°29′59.99″
7	32°30′	to 35°59′59.99″
8	36°	to 44°59′59.99″
9	45° up, but not thrust only	

Design Number
2 digits which identify the cup or cone

Please refer to the bearing tables for exact part number options

INTERCHANGE

Description		Interchange			
		NSK	SKF	Timken	FAG
Prefix	Extra Heavy	EH	EH	EH	KEH
	Heavier Than Heavy	HH	HH	HH	KHH
	Heavy	H	H	H	KH
	Heavy Medium	HM	HM	HM	KHM
	Medium	M	M	M	KM
	Light Medium	LM	LM	LM	KLM
	Light	L	L	L	KL
	Lighter Than Light	LL	LL	LL	KLL
	Extra Light	EL	E	L EL	KEL
Cup Angle	0° To 23°59′59.99	1xxxx	1xxxx	1xxxx	1xxxx
	24° To 25°29′59.99	2xxxx	2xxxx	2xxxx	2xxxx
	25°30′ To 26°59′59.99	3xxxx	3xxxx	3xxxx	3xxxx
	27° To 28°29′59.99	4xxxx	4xxxx	4xxxx	4xxxx
	28°30′ To 30°29′59.99	5xxxx	5xxxx	5xxxx	5xxxx
	30°30′ To 32°29′59.99	6xxxx	6xxxx	6xxxx	6xxxx
	32°30′ To 35°59′59.99	7xxxx	7xxxx	7xxxx	7xxxx
	36° To 44°59′59.99	8xxxx	8xxxx	8xxxx	8xxxx
	45° Up, But Not Thrust Only	9xxxx	9xxxx	9xxxx	9xxxx
	Conforms To ABMA Standard	R	--	blank	--
	Case Carburized Cup & Cone	G	--	blank	--

The competitive manufacturers are provided for a convenient source of unit substitution. They can be considered interchangeable in most instances, but for special applications, please contact NSK. NSK assumes no liability with respect to errors or omissions.

APPLICATIONS

Shown below are some common applications utilizing a tapered roller bearing design. The design allows for combinations of heavy radial and thrust loads with low to moderate speeds. This section covers only single row tapers although NSK manufactures a full line of two and four row tapers as well. For more details on multiple row tapered roller bearings, please contact an NSK representative.

Metric designs function the same as their inch series cousins, the difference lies in the units of measure. NSK metric tapers are standardly supplied with cup and cone together, while inch series bearing are available by the cup, cone, or cup and cone. The applications shown below are for either metric or inch bearings, with the equipment manufacturer choosing the preference of dimensional measurements. Metric tapers are usually found in equipment designed in Europe or Asia.

› Guide Boxes in Bar and Rod Mills › Pumps and Compressors › Cranes and Hoists › Gears and Drives › Stamping Presses › Machine Tool Spindles › Bow Thrusts on Ships › Speed Reducers › Transmissions › Sheaves › Conveyor and Transfer Equipment › Construction Equipment › Mining Equipment › Oil Field Equipment › Automotive Front and Rear Axles › Plastic Forming Equipment › Agriculture Equipment › Motorcycle Wheels › Pinion Shafts of Differential Gears › Drum Shafts › Crankshafts › Crushers

TAPERED ROLLER BEARINGS: INCH SERIES

BORE DIAMETER 12.700 – 30.213 MM, .5000 – 1.1895 INCH, 1/2 - 1 3/16 FRACTIONAL INCH

Bearing Number		Basic Bearing Dimensions											
		d Cone		D Cup		T Assembly		B Cone		C Cup		Eff. Load Center (a)	
Cone	Cup	inch	mm	inch	mm	inch	mm	inch	mm	inch	mm	inch	mm
A4050	A4138	0.5000	12.700	1.3775	34.988	0.4330	10.998	0.4326	10.988	0.3437	8.730	0.32	8.2
A4059	A4138	0.5906	15.000	1.3775	34.988	0.4330	10.998	0.4326	10.988	0.3437	8.730	0.32	8.2
A6062	A6157	0.6250	15.875	1.5745	39.992	0.4730	12.014	0.4391	11.153	0.3750	9.525	0.41	10.3
11590	11520	0.6250	15.875	1.6875	42.862	0.5625	14.288	0.5625	14.288	0.3750	9.525	0.51	13.0
A6067	A6157	0.6690	16.993	1.5745	39.992	0.4730	12.014	0.4391	11.153	0.3750	9.525	0.41	10.3
LM11749	LM11710	0.6875	17.462	1.5700	39.878	0.5450	13.843	0.5750	14.605	0.4200	10.668	0.34	8.7
A6075	A6157	0.7500	19.050	1.5745	39.992	0.4730	12.014	0.4391	11.153	0.3750	9.525	0.41	10.3
LM11949	LM11910	0.7500	19.050	1.7810	45.237	0.6100	15.494	0.6550	16.637	0.4750	12.065	0.37	9.5
05075	05185	0.7500	19.050	1.8504	47.000	0.5662	14.381	0.5662	14.381	0.4375	11.113	0.40	10.1
09067	09195	0.7500	19.050	1.9380	49.225	0.7100	18.034	0.7500	19.050	0.5625	14.288	0.42	10.7
09078	09195	0.7500	19.050	1.9380	49.225	0.7813	19.845	0.8480	21.539	0.5625	14.288	0.42	10.7
09067	09196	0.7500	19.050	1.9380	49.225	0.8350	21.209	0.7500	19.050	0.6875	17.463	0.54	13.8
09074	09194	0.7500	19.050	1.9380	49.225	0.9063	23.020	0.8480	21.539	0.6875	17.463	0.54	13.8
05079	05185	0.7874	20.000	1.8504	47.000	0.5662	14.381	0.5662	14.381	0.4375	11.113	0.40	10.1
M12649	M12610	0.8437	21.430	1.9687	50.005	0.6900	17.526	0.7200	18.288	0.5500	13.970	0.43	10.9
LM12749	LM12710	0.8661	22.000	1.7810	45.237	0.6100	15.494	0.6550	16.637	0.4750	12.065	0.39	10.0
LM12749	LM12711	0.8661	22.000	1.8110	46.000	0.6100	15.494	0.6550	16.637	0.4750	12.065	0.39	10.0
07087	07196	0.8750	22.225	1.9687	50.005	0.5313	13.495	0.5614	14.260	0.3750	9.525	0.42	10.6
07098	07204	0.9835	24.981	2.0470	51.994	0.5910	15.011	0.5614	14.260	0.5000	12.700	0.48	12.1
07097	07196	0.9843	25.000	1.9687	50.005	0.5313	13.495	0.5614	14.260	0.3750	9.525	0.42	10.6
07097	07204	0.9843	25.000	2.0470	51.994	0.5910	15.011	0.5614	14.260	0.5000	12.700	0.48	12.1
07100	07196	1.0000	25.400	1.9687	50.005	0.5313	13.495	0.5614	14.260	0.3750	9.525	0.42	10.6
L44643	L44610	1.0000	25.400	1.9800	50.292	0.5600	14.224	0.5800	14.732	0.4200	10.668	0.43	10.9
15101	15245	1.0000	25.400	2.4409	62.000	0.7500	19.050	0.8125	20.638	0.5625	14.288	0.52	13.3
15100	15250X	1.0000	25.400	2.5000	63.500	0.8125	20.638	0.8125	20.638	0.6250	15.875	0.59	14.9
23100	23256	1.0000	25.400	2.5625	65.088	0.8750	22.225	0.8450	21.463	0.6250	15.875	0.79	20.0
L44649	L44610	1.0625	26.988	1.9800	50.292	0.5600	14.224	0.5800	14.732	0.4200	10.668	0.43	10.9
L45449	L45410	1.1417	29.000	1.9800	50.292	0.5600	14.224	0.5800	14.732	0.4200	10.668	0.43	10.8
15117	15245	1.1811	30.000	2.4409	62.000	0.7500	19.050	0.8125	20.638	0.5625	14.288	0.52	13.3
15117	15250	1.1811	30.000	2.5000	63.500	0.8125	20.638	0.8125	20.638	0.6250	15.875	0.59	14.9
M86649	M86610	1.1875	30.162	2.5312	64.292	0.8438	21.433	0.8438	21.433	0.6563	16.670	0.70	17.7
15118	15245	1.1895	30.213	2.4409	62.000	0.7500	19.050	0.8125	20.638	0.5625	14.288	0.52	13.3

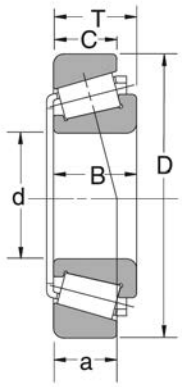

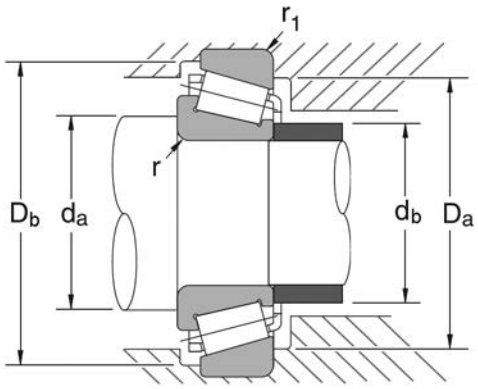

Bearing Number		Preferred Shoulder Diameters												Basic Load Ratings				Approximate Component Weight			
		Cone (r*)		Cup (r_1*)		d_a		d_b		D_a		D_b		C_r		C_{or}		Cone		Cup	
Cone	Cup	inch	mm	inch	mm	inch	mm	inch	mm	inch	mm	inch	mm	lbs	N	lbs	N	lbs	kg	lbs	kg
A4050	A4138	0.05	1.3	0.05	1.3	0.73	18.5	0.67	17.0	1.14	29.0	1.26	32.0	2640	11700	2450	10900	0.07	0.033	0.049	0.022
A4059	A4138	0.03	0.8	0.05	1.3	0.77	19.5	0.75	19.0	1.14	29.0	1.26	32.0	2640	11700	2450	10900	0.06	0.029	0.049	0.022
A6062	A6157	0.05	1.3	0.05	1.3	0.87	22.0	0.81	20.5	1.34	34.0	1.46	37.0	3350	14900	3550	15700	0.10	0.044	0.068	0.031
11590	11520	0.05	1.5	0.05	1.5	0.96	24.5	0.89	22.5	1.36	34.5	1.56	39.5	3900	17300	3850	17200	0.13	0.061	0.088	0.040
A6067	A6157	0.03	0.8	0.05	1.3	0.87	22.0	0.83	21.0	1.34	34.0	1.46	37.0	3350	14900	3550	15700	0.09	0.042	0.068	0.031
LM11749	LM11710	0.05	1.3	0.05	1.3	0.91	23.0	0.85	21.5	1.34	34.0	1.46	37.0	5050	22500	5050	22500	0.12	0.055	0.062	0.028
A6075	A6157	0.03	1.0	0.05	1.3	0.94	24.0	0.91	23.0	1.34	34.0	1.46	37.0	3350	14900	3550	15700	0.08	0.037	0.068	0.031
LM11949	LM11910	0.051	1.3	0.051	1.3	0.98	25.0	0.93	23.5	1.56	39.5	1.63	41.5	6400	28500	6500	28900	0.18	0.081	0.097	0.044
05075	05185	0.031	1.3	0.051	1.3	0.98	25.0	0.93	23.5	1.59	40.5	1.67	42.5	5350	23800	5350	23900	0.17	0.077	0.104	0.047
09067	09195	0.051	1.3	0.051	1.3	1.00	25.5	0.94	24.0	1.65	42.0	1.75	44.5	8000	35500	7950	35500	0.25	0.115	0.143	0.065
09078	09195	0.059	1.2	0.059	1.3	1.00	25.5	0.94	24.0	1.65	42.0	1.75	44.5	8400	37500	8350	37000	0.27	0.124	0.143	0.065
09067	09196	0.031	1.3	0.051	1.5	1.00	25.5	0.94	24.0	1.63	41.5	1.75	44.5	8400	37500	8350	37000	0.25	0.115	0.187	0.085
09074	09194	0.051	1.5	0.051	3.5	1.02	26.0	0.94	24.0	1.54	39.0	1.75	44.5	8400	37500	8350	37000	0.27	0.124	0.181	0.082
05079	05185	0.039	1.5	0.051	1.3	1.04	26.5	0.94	24.0	1.59	40.5	1.67	42.5	5350	23800	5350	23900	0.16	0.073	0.104	0.047
M12649	M12610	0.051	1.3	0.051	1.3	1.08	27.5	1.00	25.5	1.73	44.0	1.81	46.0	8700	38500	9000	40000	0.25	0.115	0.130	0.059
LM12749	LM12710	0.051	1.3	0.051	1.3	1.08	27.5	1.02	26.0	1.56	39.5	1.67	42.5	6550	29200	7500	33500	0.17	0.078	0.084	0.038
LM12749	LM12711	0.051	1.3	0.051	1.3	1.08	27.5	1.02	26.0	1.57	40.0	1.67	42.5	6550	29200	7500	33500	0.17	0.078	0.095	0.043
07087	07196	0.047	1.3	0.051	1.0	1.12	28.5	1.06	27.0	1.75	44.5	1.85	47.0	5850	26000	6250	27900	0.21	0.097	0.077	0.035
07098	07204	0.051	1.5	0.059	1.3	1.22	31.0	1.14	29.0	1.77	45.0	1.89	48.0	5850	26000	6250	27900	0.19	0.085	0.134	0.061
07097	07196	0.059	1.5	0.137	1.0	1.22	31.0	1.14	29.0	1.75	44.5	1.85	47.0	5850	26000	6250	27900	0.19	0.085	0.077	0.035
07097	07204	0.059	1.5	0.051	1.3	1.22	31.0	1.14	29.0	1.77	45.0	1.89	48.0	5850	26000	6250	27900	0.19	0.085	0.134	0.061
07100	07196	0.051	1.0	0.051	1.0	1.20	30.5	1.16	29.5	1.75	44.5	1.85	47.0	5850	26000	6250	27900	0.19	0.084	0.077	0.035
L44643	L44610	0.051	1.3	0.051	1.3	1.24	31.5	1.16	29.5	1.75	44.5	1.85	47.0	6200	27600	7200	32000	0.20	0.090	0.086	0.039
15101	15245	0.051	0.8	0.051	1.3	1.28	32.5	1.24	31.5	2.17	55.0	2.28	58.0	10400	46000	11900	53000	0.49	0.222	0.179	0.081
15100	15250X	0.051	3.5	0.039	1.5	1.50	38.0	1.24	31.5	2.17	55.0	2.32	59.0	10400	46000	11900	53000	0.49	0.220	0.249	0.113
23100	23256	0.059	1.5	0.051	1.5	1.54	39.0	1.36	34.5	2.09	53.0	2.4	61.0	10100	45000	10700	47500	0.47	0.214	0.313	0.142
L44649	L44610	0.059	3.5	0.039	1.3	1.48	37.5	1.22	31.0	1.75	44.5	1.85	47.0	6200	27600	7200	32000	0.18	0.081	0.086	0.039
L45449	L45410	0.059	3.5	0.051	1.3	1.56	39.5	1.30	33.0	1.75	44.5	1.89	48.0	6000	26800	7650	34000	0.17	0.079	0.079	0.036
15117	15245	0.039	1.3	0.039	1.3	1.44	36.5	1.38	35.0	2.17	55.0	2.28	58.0	10400	46000	11900	53000	0.42	0.189	0.179	0.081
15117	15250	0.051	1.3	0.051	1.3	1.44	36.5	1.38	35.0	2.20	56.0	2.32	59.0	10400	46000	11900	53000	0.42	0.189	0.249	0.113
M86649	M86610	0.031	1.5	0.051	1.5	1.61	41.0	1.50	38.0	2.13	54.0	2.40	61.0	11500	51000	14500	64500	0.47	0.211	0.282	0.128
15118	15245	0.137	3.5	0.059	1.3	1.63	41.5	1.40	35.5	2.17	55.0	2.28	58.0	10400	46000	11900	53000	0.41	0.186	0.179	0.081

*Maximum fillet which corner radius of bearing will clear.

C_r = Dynamic Radial Load Rating

C_{or} = Static Radial Load Rating

TAPERED ROLLER BEARINGS: INCH SERIES (CONT.)

BORE DIAMETER 31.750 – 45.242 MM, 1.2500 – 1.7812 INCH, 1 1/4 - 1 25/32 FRACTIONAL INCH

Bearing Number		Basic Bearing Dimensions											
		d Cone		D Cup		T Assembly		B Cone		C Cup		Eff. Load Center (a)	
Cone	Cup	inch	mm	inch	mm	inch	mm	inch	mm	inch	mm	inch	mm
LM67048	LM67010	1.2500	31.750	2.3280	59.131	0.6250	15.875	0.6600	16.764	0.4650	11.811	0.50	12.6
15123	15245	1.2500	31.750	2.4409	62.000	0.7150	18.161	0.7500	19.050	0.5625	14.288	0.52	13.3
15125	15245	1.2500	31.750	2.4409	62.000	0.7500	19.050	0.8125	20.638	0.5625	14.288	0.52	13.3
15126	15245	1.2500	31.750	2.4409	62.000	0.7500	19.050	0.8125	20.638	0.5625	14.288	0.52	13.3
15126	15250	1.2500	31.750	2.5000	63.500	0.8125	20.638	0.8125	20.638	0.6250	15.875	0.59	14.9
14125A	14276	1.2500	31.750	2.7170	69.012	0.7813	19.845	0.7710	19.583	0.6250	15.875	0.60	15.3
14123A	14274	1.2500	31.750	2.7170	69.012	1.0623	26.982	1.0520	26.721	0.6250	15.875	0.59	15.1
M88048	M88010	1.3125	33.338	2.6875	68.262	0.8750	22.225	0.8750	22.225	0.6875	17.462	0.75	19.0
14130	14274	1.3125	33.338	2.7170	69.012	0.7813	19.845	0.7710	19.583	0.6250	15.875	0.60	15.3
LM48548	LM48510	1.3750	34.925	2.5625	65.088	0.7100	18.034	0.7200	18.288	0.5500	13.970	0.56	14.1
14137A	14276	1.3750	34.925	2.7170	69.012	0.7813	19.845	0.7710	19.583	0.6250	15.875	0.59	15.1
14138A	14276	1.3750	34.925	2.7170	69.012	0.7813	19.845	0.7710	19.583	0.6250	15.875	0.60	15.3
25877	25821	1.3750	34.925	2.8750	73.025	0.9375	23.812	0.9688	24.608	0.7500	19.050	0.62	15.7
L68149	L68110	1.3780	35.000	2.3280	59.131	0.6250	15.875	0.6600	16.764	0.4700	11.938	0.52	13.2
L68149	L68111	1.3780	35.000	2.3612	59.975	0.6250	15.875	0.6600	16.764	0.4700	11.938	0.52	13.2
HM89449	HM89410	1.4375	36.512	3.0000	76.200	1.1563	29.370	1.1250	28.575	0.9063	23.020	0.93	23.6
JL69349	JL69310	1.4961	38.000	2.4803	63.000	0.6693	17.000	0.6693	17.000	0.5315	13.500	0.57	14.6
LM29749	LM29710	1.5000	38.100	2.5625	65.088	0.7100	18.034	0.7200	18.288	0.5500	13.970	0.54	13.7
2788	2729	1.5000	38.100	3.0000	76.200	0.9375	23.812	1.0100	25.654	0.7500	19.050	0.63	15.9
2788	2720	1.5000	38.100	3.0000	76.200	0.9375	23.812	1.0100	25.654	0.7500	19.050	0.63	15.9
18590	18520	1.6250	41.275	2.8750	73.025	0.6562	16.667	0.6875	17.462	0.5000	12.700	0.55	14.0
LM501349	LM501310	1.6250	41.275	2.8910	73.431	0.7700	19.558	0.7800	19.812	0.5800	14.732	0.64	16.3
LM501349	LM501314	1.6250	41.275	2.8910	73.431	0.8437	21.430	0.7800	19.812	0.6537	16.604	0.72	18.2
26882	26822	1.6250	41.275	3.1250	79.375	0.9375	23.812	1.0000	25.400	0.7500	19.050	0.65	16.4
342	332	1.6250	41.275	3.1496	80.000	0.8268	21.000	0.8820	22.403	0.7018	17.826	0.57	14.5
25577	25523	1.6880	42.875	3.2650	82.931	1.0625	26.988	1.0000	25.400	0.8750	22.225	0.82	20.8
25580	25520	1.7500	44.450	3.2650	82.931	0.9375	23.812	1.0000	25.400	0.7500	19.050	0.69	17.6
3578	3525	1.7500	44.450	3.4375	87.312	1.1875	30.162	1.2160	30.886	0.9375	23.812	0.77	19.5
3782	3720	1.7500	44.450	3.6718	93.264	1.1875	30.162	1.1930	30.302	0.9375	23.812	0.88	22.4
LM102949	LM102910	1.7812	45.242	2.8910	73.431	0.7700	19.558	0.7800	19.812	0.6200	15.748	0.57	14.6
LM603049	LM603011	1.7812	45.242	3.0625	77.788	0.7812	19.842	0.7812	19.842	0.5937	15.080	0.68	17.2

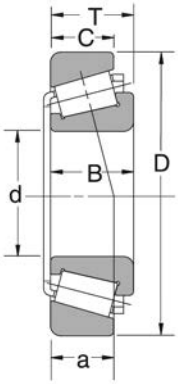

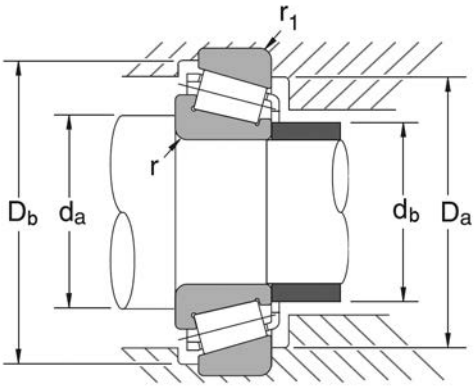

Bearing Number		Preferred Shoulder Diameters												Basic Load Ratings				Approximate Component Weight			
		Cone (r^*)		Cup (r_1^*)		d_a		d_b		D_a		D_b		C_r		C_{or}		Cone		Cup	
Cone	Cup	inch	mm	inch	mm	inch	mm	inch	mm	inch	mm	inch	mm	lbs	N	lbs	N	lbs	kg	lbs	kg
LM67048	LM67010	0.137	3.5	0.051	1.3	1.67	42.5	1.42	36.0	2.05	52	2.20	56	7800	34500	9300	41500	0.280	0.127	0.137	0.062
15123	15245	0.137	3.5	0.051	1.3	1.67	42.5	1.44	36.5	2.17	55	2.28	58	10400	46000	11900	53000	0.364	0.165	0.179	0.081
15125	15245	0.137	3.5	0.051	1.3	1.67	42.5	1.44	36.5	2.17	55	2.28	58	10400	46000	11900	53000	0.384	0.174	0.179	0.081
15126	15245	0.031	0.8	0.051	1.3	1.46	37.0	1.44	36.5	2.17	55	2.28	58	10400	46000	11900	53000	0.388	0.176	0.179	0.081
15126	15250	0.031	0.8	0.051	1.3	1.46	37.0	1.44	36.5	2.20	56	2.32	59	10400	46000	11900	53000	0.388	0.176	0.249	0.113
14125A	14276	0.137	3.5	0.051	1.3	1.73	44.0	1.48	37.5	2.36	60	2.48	63	10600	47000	12600	56000	0.483	0.219	0.298	0.135
14123A	14274	0.169	4.3	0.129	3.3	1.63	41.5	1.48	37.5	2.32	59	2.48	63	10600	47000	12600	56000	0.637	0.289	0.291	0.132
M88048	M88010	0.031	0.8	0.059	1.5	1.67	42.5	1.61	41.0	2.28	58	2.56	65	12500	55500	15900	70500	0.520	0.236	0.322	0.146
14130	14274	0.137	3.5	0.129	3.3	1.77	45.0	1.52	38.5	2.32	59	2.48	63	10600	47000	12600	56000	0.456	0.207	0.291	0.132
LM48548	LM48510	0.137	3.5	0.051	1.3	1.81	46.0	1.57	40.0	2.28	58	2.40	61	10700	47500	13000	57500	0.379	0.172	0.192	0.087
14137A	14276	0.059	1.5	0.051	1.3	1.65	42.0	1.57	40.0	2.36	60	2.48	63	10600	47000	12600	56000	0.432	0.196	0.298	0.135
14138A	14276	0.137	3.5	0.051	1.3	1.81	46.0	1.57	40.0	2.36	60	2.48	63	10600	47000	12600	56000	0.428	0.194	0.298	0.135
25877	25821	0.059	1.5	0.031	0.8	1.69	43.0	1.59	40.5	2.56	65	2.68	68	16000	71000	19300	86000	0.675	0.306	0.368	0.167
L68149	L68110	0.137	3.5	0.051	1.3	1.79	45.5	1.54	39.0	2.05	52	2.20	56	7850	35000	10500	47000	0.258	0.117	0.123	0.056
L68149	L68111	0.137	3.5	0.051	1.3	1.79	45.5	1.54	39.0	2.09	53	2.20	56	7850	35000	10500	47000	0.258	0.117	0.141	0.064
HM89449	HM89410	0.137	3.5	0.129	3.3	2.13	54.0	1.75	44.5	2.44	62	2.87	73	17600	78500	23900	106000	0.838	0.380	0.567	0.257
JL69349	JL69310	0.137	3.5	0.051	1.3	1.93	49.0	1.67	42.5	2.20	56	2.36	60	8600	38500	11700	52000	0.291	0.132	0.157	0.071
LM29749	LM29710	0.090	2.3	0.051	1.3	1.81	46.0	1.67	42.5	2.32	59	2.44	62	9500	42500	12400	55000	0.353	0.160	0.174	0.079
2788	2729	0.137	3.5	0.031	0.8	1.97	50.0	1.71	43.5	2.68	68	2.76	70	16500	73500	20500	91000	0.688	0.312	0.421	0.191
2788	2720	0.137	3.5	0.129	3.3	1.97	50.0	1.71	43.5	2.60	66	2.76	70	16500	73500	20500	91000	0.688	0.312	0.412	0.187
18590	18520	0.137	3.5	0.059	1.5	2.09	53.0	1.81	46.0	2.60	66	2.72	69	10100	44500	12100	54000	0.439	0.199	0.190	0.086
LM501349	LM501310	0.137	3.5	0.031	0.8	2.09	53.0	1.83	46.5	2.64	67	2.76	70	12200	54500	15100	67000	0.498	0.226	0.238	0.108
LM501349	LM501314	0.137	3.5	0.031	0.8	2.09	53.0	1.83	46.5	2.60	66	2.76	70	12200	54500	15100	67000	0.498	0.226	0.284	0.129
26882	26822	0.137	3.5	0.031	0.8	2.13	54.0	1.85	47.0	2.80	71	2.91	74	16600	74000	20900	93000	0.769	0.349	0.410	0.186
342	332	0.137	3.5	0.051	1.3	2.09	53.0	1.81	46.0	2.87	73	2.95	75	15400	68500	17000	75500	0.712	0.323	0.322	0.146
25577	25523	0.137	3.5	0.090	2.3	2.17	55.0	1.93	49.0	2.83	72	3.03	77	17200	76500	22200	99000	0.840	0.381	0.547	0.248
25580	25520	0.137	3.5	0.031	0.8	2.24	57.0	1.97	50.0	2.91	74	3.03	77	17200	76500	22200	99000	0.791	0.359	0.448	0.203
3578	3525	0.137	3.5	0.129	3.3	2.24	57.0	2.01	51.0	2.95	75	3.19	81	21600	96000	26900	120000	1.052	0.477	0.670	0.304
3782	3720	0.137	3.5	0.125	3.2	2.28	58.0	2.05	52.0	3.23	82	3.46	88	23200	103000	30700	136000	1.495	0.678	0.644	0.292
LM102949	LM102910	0.137	3.5	0.031	0.8	2.20	56.0	1.97	50.0	2.68	68	2.76	70	12100	53500	16900	75000	0.470	0.213	0.225	0.102
LM603049	LM603011	0.137	3.5	0.031	0.8	2.24	57.0	1.97	50.0	2.80	71	2.91	74	12600	56000	16000	71000	0.549	0.249	0.262	0.119

*Maximum fillet which corner radius of bearing will clear.

C_r = Dynamic Radial Load Rating

C_{or} = Static Radial Load Rating

TAPERED ROLLER BEARINGS INCH SERIES (CONT.)

BORE DIAMETER 45.242 – 92.075MM, 1.7812 – 3.625 INCH, 1 25/32 – 3 5/8 FRACTIONAL INCH

Bearing Number		Basic Bearing Dimensions											
		d Cone		D Cup		T Assembly		B Cone		C Cup		Eff. Load Center (a)	
Cone	Cup	inch	mm	inch	mm	inch	mm	inch	mm	inch	mm	inch	mm
LM603049	LM603012	1.7812	45.242	3.0625	77.788	0.8437	21.430	0.7812	19.842	0.6562	16.667	0.74	18.8
25590	25520	1.7960	45.618	3.2650	82.931	0.9375	23.812	1.0000	25.400	0.7500	19.050	0.69	17.6
25590	25523	1.7960	45.618	3.2650	82.931	1.0625	26.988	1.0000	25.400	0.8750	22.225	0.82	20.8
18690	18620	1.8125	46.038	3.1250	79.375	0.6875	17.462	0.6875	17.462	0.5313	13.495	0.61	15.5
368A	362A	2.0000	50.800	3.5000	88.900	0.8125	20.638	0.8750	22.225	0.6501	16.513	0.65	16.6
387A	382A	2.2500	57.150	3.8125	96.838	0.8268	21.000	0.8640	21.946	0.6250	15.875	0.69	17.6
3982	3920	2.5000	63.500	4.4375	112.712	1.1875	30.162	1.1830	30.048	0.9375	23.812	1.00	25.5
39585	39520	2.5000	63.500	4.4375	112.712	1.1875	30.162	1.1875	30.162	0.9375	23.812	0.93	23.5
HM212047	HM212011	2.5000	63.500	4.8125	122.238	1.5000	38.100	1.5100	38.354	1.1700	29.718	1.06	26.9
3984	3920	2.6250	66.675	4.4375	112.712	1.1875	30.162	1.1830	30.048	0.9375	23.812	1.00	25.5
39590	39520	2.6250	66.675	4.4375	112.712	1.1875	30.162	1.1875	30.162	0.9375	23.812	0.93	23.5
560	553X	2.6250	66.675	4.8125	122.238	1.5000	38.100	1.4440	36.678	1.1875	30.162	1.13	28.8
560	552A	2.6250	66.675	4.8750	123.825	1.5000	38.100	1.4440	36.678	1.1875	30.162	1.13	28.8
33287	33462	2.8750	73.025	4.6250	117.475	1.1875	30.162	1.1875	30.162	0.9375	23.812	1.06	26.8
567	563	2.8750	73.025	5.0000	127.000	1.4375	36.512	1.4240	36.170	1.1250	28.575	1.11	28.3
495A	493	3.0000	76.200	5.3750	136.525	1.1875	30.162	1.1720	29.769	0.8750	22.225	1.13	28.7
575	572	3.0000	76.200	5.5115	139.992	1.4375	36.512	1.4212	36.098	1.1250	28.575	1.22	31.1
47686	47620	3.2500	82.550	5.2500	133.350	1.3125	33.338	1.3125	33.338	1.0313	26.195	1.14	29.0
580	572	3.2500	82.550	5.5115	139.992	1.4375	36.512	1.4212	36.098	1.1250	28.575	1.22	31.1
663	653	3.2500	82.550	5.7500	146.050	1.6250	41.275	1.6250	41.275	1.2500	31.750	1.31	33.2
749	742	3.3475	85.026	5.9090	150.089	1.7500	44.450	1.8375	46.672	1.4375	36.512	1.28	32.5
497	493	3.3750	85.725	5.3750	136.525	1.1875	30.162	1.1720	29.769	0.8750	22.225	1.13	28.7
665A	653	3.3750	85.725	5.7500	146.050	1.6250	41.275	1.6250	41.275	1.2500	31.750	1.31	33.2
593	592A	3.5000	88.900	6.0000	152.400	1.5625	39.688	1.4300	36.322	1.1875	30.162	1.46	37.1
598	592A	3.6250	92.075	6.0000	152.400	1.5625	39.688	1.4300	36.322	1.1875	30.162	1.46	37.1
598A	592A	3.6250	92.075	6.0000	152.400	1.5625	39.688	1.4300	36.322	1.1875	30.162	1.46	37.1

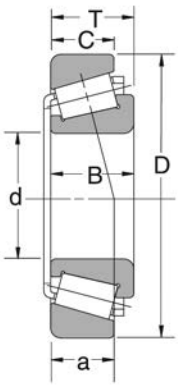

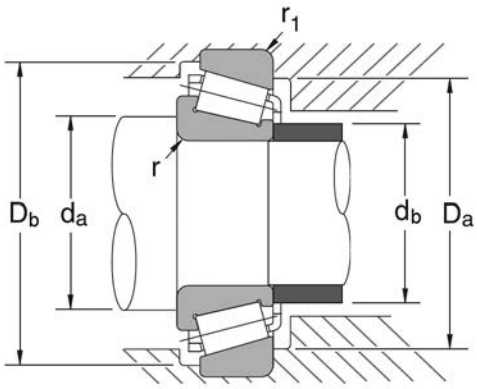

Bearing Number		Preferred Shoulder Diameters												Basic Load Ratings				Approximate Component Weight			
		Cone (r^*)		Cup (r_1^*)		d_a		d_b		D_a		D_b		C_r		C_{or}		Cone		Cup	
Cone	Cup	inch	mm	inch	mm	inch	mm	inch	mm	inch	mm	inch	mm	lbs	N	lbs	N	lbs	kg	lbs	kg
LM603049	LM603012	0.14	3.5	0.03	0.8	2.2	57	2.0	50	2.8	70	2.9	74	12600	56000	16000	71000	0.549	0.249	0.302	0.137
25590	25520	0.14	3.5	0.03	0.8	2.3	58	2.0	51	2.9	74	3.0	77	17200	76500	22200	99000	0.756	0.343	0.448	0.203
25590	25523	0.14	3.5	0.09	2.3	2.3	58	2.0	51	2.8	72	3.0	77	17200	76500	22200	99000	0.756	0.343	0.547	0.248
18690	18620	0.11	2.8	0.06	1.5	2.2	56	2.0	51	2.8	71	2.9	74	10300	45925	12800	56958	0.465	0.211	0.278	0.126
368A	362A	0.14	3.5	0.05	1.3	2.4	62	2.2	56	3.2	81	3.3	84	16500	73000	19100	85000	0.745	0.338	0.366	0.166
387A	382A	0.14	3.5	0.03	0.8	2.7	69	2.4	62	3.5	89	3.6	92	16500	73000	20200	89500	0.926	0.420	0.395	0.179
3982	3920	0.14	3.5	0.13	3.2	3.0	77	2.8	71	3.9	99	4.2	106	26900	120000	39000	173000	1.739	0.789	1.001	0.454
39585	39520	0.14	3.5	0.13	3.3	3.0	77	2.8	71	4.0	101	4.2	107	32000	142000	45500	202000	1.982	0.899	0.791	0.359
HM212047	HM212011	0.28	7.0	0.13	3.3	3.4	87	2.9	73	4.3	108	4.6	116	42000	188000	55000	245000	2.954	1.340	1.318	0.598
3984	3920	0.14	3.5	0.13	3.2	3.1	80	2.9	74	3.9	99	4.2	106	23300	104000	33500	149000	1.570	0.712	1.001	0.454
39590	39520	0.14	3.5	0.13	3.3	3.1	80	2.9	74	4.0	101	4.2	107	32000	142000	45500	202000	1.812	0.822	0.791	0.359
560	553X	0.14	3.5	0.13	3.3	3.2	81	3.0	75	4.3	108	4.5	115	36000	161000	49500	221000	2.513	1.140	1.526	0.692
560	552A	0.14	3.5	0.13	3.3	3.2	81	3.0	75	4.3	109	4.6	116	36000	161000	49500	221000	2.513	1.140	1.684	0.764
33287	33462	0.14	3.5	0.13	3.3	3.4	87	3.1	80	4.1	104	4.4	112	26800	119000	40500	179000	1.645	0.746	0.974	0.442
567	563	0.14	3.5	0.13	3.3	3.5	88	3.2	81	4.4	112	4.7	120	37500	166000	52500	234000	2.579	1.170	1.444	0.655
495A	493	0.137	3.5	0.129	3.3	3.6	92	3.4	86	4.8	122	5.1	130	29300	130000	43000	192000	2.800	1.270	1.213	0.550
575	572	0.137	3.5	0.129	3.3	3.6	92	3.4	86	4.9	125	5.2	133	39500	175000	58500	260000	3.549	1.610	1.737	0.788
47686	47620	0.137	3.5	0.129	3.3	3.8	97	3.5	90	4.7	119	5.0	128	34000	151000	53000	236000	2.601	1.180	1.272	0.577
580	572	0.137	3.5	0.129	3.3	3.9	98	3.6	91	4.9	125	5.2	133	39500	175000	58500	260000	3.064	1.390	1.737	0.788
663	653	0.137	3.5	0.129	3.3	3.9	99	3.6	92	5.2	131	5.5	139	46500	207000	66500	296000	4.079	1.850	1.964	0.891
749	742	0.137	3.5	0.129	3.3	4.0	101	3.7	95	5.3	134	5.6	142	59500	265000	83000	370000	4.718	2.140	2.359	1.070
497	493	0.137	3.5	0.129	3.3	3.9	99	3.7	93	4.8	122	5.1	130	29300	130000	43000	192000	2.176	0.987	1.213	0.550
665A	653	0.251	6.4	0.129	3.3	4.2	107	3.7	95	5.2	131	5.5	139	46500	207000	66500	296000	3.770	1.710	1.964	0.891
593	592A	0.137	3.5	0.125	3.2	4.1	104	3.9	98	5.3	135	5.7	144	41000	183000	64000	285000	3.814	1.730	2.337	1.060
598	592A	0.137	3.5	0.125	3.2	4.2	107	4.0	101	5.3	135	5.7	144	41000	183000	64000	285000	3.527	1.600	2.337	1.060
598A	592A	0.251	6.4	0.125	3.2	4.4	113	4.0	101	5.3	135	5.7	144	41000	183000	64000	285000	3.505	1.590	2.337	1.060

*Maximum fillet which corner radius of bearing will clear.

C_r = Dynamic Radial Load Rating C_{or} = Static Radial Load Rating

THRUST BEARINGS

BALL THRUST BEARINGS

Nomenclature F-1
Interchange F-2
Applications F-2
Single Direction, Flat Seat F-3
Double Direction, Flat Seat F-9

SPHERICAL ROLLER THRUST BEARINGS

Nomenclature F-11
Interchange F-12
Applications F-12
Bearing Tables F-13

TAPERED ROLLER THRUST BEARINGS

Nomenclature F-19
Applications F-19
Bearing Tables F-19

CYLINDRICAL ROLLER THRUST BEARINGS

Nomenclature F-20
Applications F-20
Bearing Tables F-21

BALL THRUST BEARINGS

Basic Type & Design
51: Ball Thrust, Single Direction
52: Ball Thrust, Double Direction
53: Ball Thrust, Single Direction, with Aligning Seat
54: Ball Thrust, Double Direction, with Aligning Seat

Bore Size
(04 and up: multiply last two numbers by 5 to get bore in mm)
00: 10 mm **04:** 20 mm
01: 12 mm **05:** 25 mm
02: 15 mm **12:** 60 mm
03: 17 mm **20:** 100 mm

Other Features
U: With Aligning Seat Washer
X: Modified Boundary to ISO
P5: Precision Class 5 (ABEC 5)

53	2	05	M	U

Series
1: Extra Light
2: Light
3: Medium
4: Heavy

Cage Option
Blank: Steel
M: Brass

Please refer to the bearing tables for exact part number options

INTERCHANGE

Description		Interchange		
		NSK	SKF	FAG
Part Number	Single Direction	511xx	511xx	511xx
	Single Direction	512xx	512xx	512xx
	Single Direction	513xx	513xx	513xx
	Single Direction	514xx	514xx	514xx
	Single Direction with Aligning Seat	532xx	532xx	532xx
	Single Direction with Aligning Seat	533xx	533xx	533xx
	Single Direction with Aligning Seat	534xx	534xx	534xx
	Double Direction	522xx	522xx	522xx
	Double Direction	523xx	523xx	523xx
	Double Direction	524xx	524xx	524xx
	Double Direction with Aligning Seat	542xx	542xx	542xx
	Double Direction with Aligning Seat	543xx	543xx	543xx
	Double Direction with Aligning Seat	544xx	544xx	544xx
Suffix	Steel Cage	BLANK	J	FP
	Brass Cage	M	M	MP
	Boundary Dimensions Adopted to ISO	X	--	X
	With Self-Aligning Seat Washer	U	U	U
	ABEC 5 Precision Class	P5	P5	P5

The competitive manufacturers are provided for a convenient source of unit substitution. They can be considered interchangeable in most instances, but for special applications, please contact NSK.
NSK assumes no liability with respect to errors or omissions.

APPLICATIONS

The ball thrust bearings are designed to handle thrust loads while operating at high speeds. These bearings can be ordered with an aligning seat and aligning washer if misalignment or deflection can not be avoided.

› **Screw Jacks** › **Machine Tool Spindle Tail Stock** › **Vertical Openers (Spinning and Weaving Machines)**

BALL THRUST BEARINGS: SINGLE DIRECTION, FLAT SEAT

BORE DIAMETER 10 – 45 MM, .3937 – 1.7717 INCH

Bearing Number	Basic Bearing Dimensions						Preferred Shoulder Dimensions					
	d		D		T		r*		d_a min		D_a max	
	mm	inch	mm	inch	mm	inch	mm	inch	mm	inch	mm	inch
51100	10	0.3937	24	0.9449	9	0.3543	0.3	0.01	18	0.71	16	0.63
51200	10	0.3937	26	1.0236	11	0.4331	0.6	0.02	20	0.79	16	0.63
51101	12	0.4724	26	1.0236	9	0.3543	0.3	0.01	20	0.79	18	0.71
51201	12	0.4724	28	1.1024	11	0.4331	0.6	0.02	22	0.87	18	0.71
51102	15	0.5906	28	1.1024	9	0.3543	0.3	0.01	23	0.91	22	0.87
51202	15	0.5906	32	1.2598	12	0.4724	0.6	0.02	25	0.99	22	0.87
51103	17	0.6693	30	1.1811	9	0.3543	0.3	0.01	25	0.99	22	0.87
51203	17	0.6693	35	1.3780	12	0.4724	0.6	0.02	28	1.10	24	0.95
51104	20	0.7874	35	1.3780	10	0.3937	0.3	0.01	29	1.14	26	1.02
51204	20	0.7874	40	1.5748	14	0.5512	0.6	0.02	32	1.26	28	1.10
51105	25	0.9843	42	1.6535	11	0.4331	0.6	0.02	35	1.38	32	1.26
51205	25	0.9843	47	1.8504	15	0.5906	0.6	0.02	38	1.50	34	1.34
51305	25	0.9843	52	2.0472	18	0.7087	1.0	0.04	41	1.62	36	1.42
51405	25	0.9843	60	2.3622	24	0.9449	1.0	0.04	46	1.81	39	1.54
51106	30	1.1811	47	1.8504	11	0.4331	0.6	0.02	40	1.58	37	1.46
51206	30	1.1811	52	2.0472	16	0.6299	0.6	0.02	43	1.69	39	1.54
51306	30	1.1811	60	2.3622	21	0.8268	1.0	0.04	48	1.89	42	1.66
51406	30	1.1811	70	2.7559	28	1.1024	1.0	0.04	54	2.13	46	1.81
51107	35	1.3780	52	2.0472	12	0.4724	0.6	0.02	45	1.77	42	1.66
51207	35	1.3780	62	2.4409	18	0.7087	1.0	0.04	51	2.01	46	1.81
51307	35	1.3780	68	2.6772	24	0.9449	1.0	0.04	55	2.17	48	1.89
51407	35	1.3780	80	3.1496	32	1.2598	1.0	0.04	62	2.44	53	2.09
51108	40	1.5748	60	2.3622	13	0.5118	0.6	0.02	52	2.05	48	1.89
51208	40	1.5748	68	2.6772	19	0.7480	1.0	0.04	57	2.25	51	2.01
51308	40	1.5748	78	3.0709	26	1.0236	1.0	0.04	63	2.48	55	2.17
51408	40	1.5748	90	3.5433	36	1.4173	1.0	0.04	70	2.76	60	2.36
51109	45	1.7717	65	2.5591	14	0.5512	0.6	0.02	57	2.25	53	2.09
51209	45	1.7717	73	2.8740	20	0.7874	1.0	0.04	62	2.44	56	2.21
51309	45	1.7717	85	3.3465	28	1.1024	1.0	0.04	69	2.72	61	2.40
51409	45	1.7717	100	3.9370	39	1.5354	1.0	0.04	78	3.07	67	2.64

*Maximum fillet which corner radius of bearing will clear.

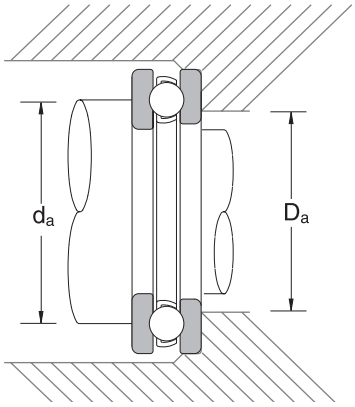

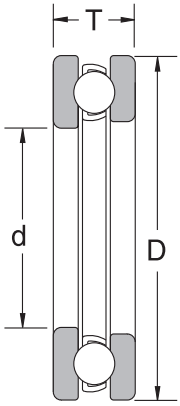

COMMON OPTIONS	
P5 (PA5)	ISO 5 / ABEC 5 Precision
P6 (PA3)	ISO 6 / ABEC 3 Precision

Bearing Number	Basic Load Ratings				Limiting Speeds (RPM)		Bearing Weight (Approx.)	
	C_a		C_{oa}					
	N	lbs	N	lbs	Grease	Oil	kg	lbs
51100	10100	2270	14000	3150	6700	10000	0.02	0.04
51200	12800	2870	17100	3850	6000	9000	0.03	0.06
51101	10400	2330	15400	3450	6700	10000	0.02	0.05
51201	13300	2980	19000	4250	5600	8500	0.03	0.07
51102	10600	2380	16800	3750	6300	9500	0.23	0.51
51202	16700	3750	24800	5600	5000	7500	0.04	0.10
51103	11400	2570	19500	4400	6000	9000	0.02	0.06
51203	17300	3900	27300	6150	4800	7500	0.05	0.11
51104	15100	3400	26600	6000	5300	8000	0.04	0.08
51204	22500	5050	37500	8500	4300	6300	0.08	0.17
51105	19700	4450	37000	8350	4800	7100	0.06	0.12
51205	28000	6300	50500	11300	3800	5600	0.11	0.25
51305	36000	8100	61500	13800	3200	5000	0.17	0.37
51405	56000	12600	89500	20100	2600	4000	0.33	0.74
51106	20600	4600	42000	9500	4300	6700	0.06	0.14
51206	29500	6650	58000	13100	3400	5300	0.14	0.30
51306	43000	9700	78500	17700	2800	4300	0.27	0.59
51406	73000	16500	126000	28300	2200	3400	0.52	1.14
51107	22100	4950	49500	11200	4000	6000	0.08	0.18
51207	39500	8900	78000	17600	3000	4500	0.21	0.46
51307	56000	12600	105000	23500	2400	3800	0.39	0.85
51407	87500	19700	155000	35000	2000	3000	0.77	1.70
51108	27100	6100	63000	14100	3600	5300	0.12	0.27
51208	47500	10600	98500	22100	2800	4300	0.27	0.60
51308	70000	15700	135000	30000	2200	3400	0.54	1.18
51408	103000	23200	188000	42000	1700	2600	1.10	2.43
51109	28100	6300	69000	15500	3400	5000	0.14	0.31
51209	48000	10800	105000	23600	2600	4000	0.31	0.68
51309	80500	18100	163000	36500	2000	3000	0.67	1.48
51409	128000	28700	246000	55500	1600	2400	1.46	3.22

C_a = Dynamic Axial Load Rating C_{oa} = Static Axial Load Rating

BALL THRUST BEARINGS: SINGLE DIRECTION, FLAT SEAT (CONT.)

BORE DIAMETER 50 - 85 MM, 1.9685 – 3.3465 INCH

Bearing Number	Basic Bearing Dimensions						Preferred Shoulder Dimensions					
	d		D		T		r*		d_a min		D_a max	
	mm	inch	mm	inch	mm	inch	mm	inch	mm	inch	mm	inch
51110	50	1.9685	70	2.7559	14	0.5512	0.6	0.02	62	2.4	58	2.3
51210	50	1.9685	78	3.0709	22	0.8661	1.0	0.04	67	2.6	61	2.4
51310	50	1.9685	95	3.7402	31	1.2205	1.0	0.04	77	3.0	68	2.7
51410	50	1.9685	110	4.3307	43	1.6929	1.5	0.06	86	3.4	74	2.9
51111	55	2.1654	78	3.0709	16	0.6299	0.6	0.02	69	2.7	64	2.5
51211	55	2.1654	90	3.5433	25	0.9843	1.0	0.04	76	3.0	69	2.7
51311	55	2.1654	105	4.1339	35	1.3780	1.0	0.04	85	3.3	75	3.0
51411	55	2.1654	120	4.7244	48	1.8898	1.5	0.06	94	3.7	81	3.2
51112	60	2.3622	85	3.3465	17	0.6693	1.0	0.04	75	3.0	70	2.8
51212	60	2.3622	95	3.7402	26	1.0236	1.0	0.04	81	3.2	74	2.9
51312	60	2.3622	110	4.3307	35	1.3780	1.0	0.04	90	3.5	80	3.2
51412	60	2.3622	130	5.1181	51	2.0079	1.5	0.06	102	4.0	88	3.5
51113	65	2.5591	90	3.5433	18	0.7087	1.0	0.04	80	3.2	75	3.0
51213	65	2.5591	100	3.9370	27	1.0630	1.0	0.04	86	3.4	79	3.1
51313	65	2.5591	115	4.5276	36	1.4173	1.0	0.04	95	3.7	85	3.3
51413	65	2.5591	140	5.5118	56	2.2047	2.0	0.08	110	4.3	95	3.7
51114	70	2.7559	95	3.7402	18	0.7087	1.0	0.04	85	3.3	80	3.2
51214	70	2.7559	105	4.1339	27	1.0630	1.0	0.04	91	3.6	84	3.3
51314	70	2.7559	125	4.9213	40	1.5748	1.0	0.04	103	4.1	92	3.6
51414	70	2.7559	150	5.9055	60	2.3622	2.0	0.08	118	4.6	102	4.0
51115	75	2.9528	100	3.9370	19	0.7480	1.0	0.04	90	3.5	85	3.3
51215	75	2.9528	110	4.3307	27	1.0630	1.0	0.04	96	3.8	89	3.5
51315	75	2.9528	135	5.3150	44	1.7323	1.5	0.06	111	4.4	99	3.9
51415	75	2.9528	160	6.2992	65	2.5591	2.0	0.08	125	4.9	110	4.3
51116	80	3.1496	105	4.1339	19	0.7480	1.0	0.04	95	3.7	90	3.5
51216	80	3.1496	115	4.5276	28	1.1024	1.0	0.04	101	4.0	94	3.7
51316	80	3.1496	140	5.5118	44	1.7323	1.5	0.06	116	4.6	104	4.1
51416	80	3.1496	170	6.6929	68	2.6772	2.0	0.08	133	5.2	117	4.6
51117	85	3.3465	110	4.3307	19	0.7480	1.0	0.04	100	3.9	95	3.7
51217	85	3.3465	125	4.9213	31	1.2205	1.0	0.04	109	4.3	101	4.0
51317	85	3.3465	150	5.9055	49	1.9291	1.5	0.06	124	4.9	111	4.4
51417X	85	3.3465	180	7.0866	72	2.8346	2.0	0.08	141	5.6	124	4.9

*Maximum fillet which corner radius of bearing will clear.

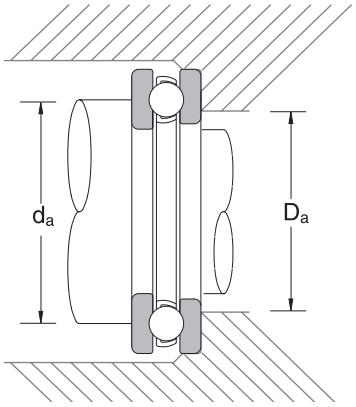

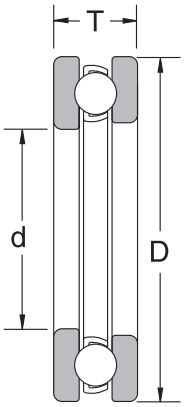

COMMON OPTIONS	
P5 (PA5)	ISO 5 / ABEC 5 Precision
P6 (PA3)	ISO 6 / ABEC 3 Precision

Bearing Number	Basic Load Ratings				Limiting Speeds (RPM)		Bearing Weight (Approx.)	
	C_a		C_{oa}					
	N	lbs	N	lbs	Grease	Oil	kg	lbs
51110	29000	6500	75500	17000	3200	4800	0.15	0.34
51210	49000	11000	111000	25100	2400	3600	0.38	0.83
51310	97500	21900	202000	45500	1800	2800	0.93	2.05
51410	147000	33000	288000	65000	1400	2200	1.94	4.28
51111	35000	7900	93000	20900	2800	4300	0.23	0.50
51211	70000	15700	159000	35500	2200	3200	0.60	1.32
51311	115000	26000	244000	55000	1600	2400	1.31	2.89
51411	181000	40500	350000	78500	1300	1900	2.58	5.69
51112	42000	9400	113000	25300	2600	4000	0.28	0.62
51212	71500	16100	169000	38000	2000	3000	0.67	1.48
51312	119000	26800	263000	59000	1600	2400	1.40	3.09
51412	202000	45500	395000	89500	1200	1800	3.16	6.97
51113	42000	9450	117000	26400	2400	3800	0.32	0.71
51213	75500	17000	189000	42500	1900	2800	0.76	1.67
51313	123000	27600	282000	63500	1500	2400	1.54	3.40
51413	234000	52500	495000	111000	1100	1700	4.10	9.04
51114	43500	9750	127000	28500	2400	3600	0.34	0.76
51214	74000	16700	189000	42500	1900	2800	0.79	1.75
51314	137000	31000	315000	70500	1400	2000	2.00	4.41
51414	252000	56500	555000	124000	1000	1500	5.05	11.13
51115	43500	9850	131000	29500	2200	3400	0.39	0.86
51215	78000	17500	209000	47000	1800	2800	0.84	1.86
51315	159000	35500	365000	82500	1300	1900	2.60	5.73
51415	254000	57000	560000	126000	1000	1400	6.15	13.56
51116	45000	10100	141000	31500	2200	3400	0.42	0.92
51216	79000	17800	218000	49000	1800	2600	0.93	2.05
51316	164000	37000	395000	88500	1300	1900	2.74	6.04
51416	272000	61000	620000	140000	900	1300	7.21	15.90
51117	46500	10400	150000	34000	2200	3200	0.44	0.97
51217	96000	21600	264000	59500	1600	2400	1.22	2.69
51317	207000	46500	490000	110000	1100	1700	3.57	7.87
51417X	310000	69500	755000	169000	900	1300	8.51	18.76

C_a = Dynamic Axial Load Rating C_{oa} = Static Axial Load Rating

BALL THRUST BEARINGS: SINGLE DIRECTION, FLAT SEAT (CONT.)

BORE DIAMETER 90 – 160MM, 3.5433 – 6.2992 INCH

Bearing Number	Basic Bearing Dimensions						Preferred Shoulder Dimensions					
	d		D		T		r*		d_a min		D_a max	
	mm	inch	mm	inch	mm	inch	mm	inch	mm	inch	mm	inch
51118	90	3.5433	120	4.7244	22	0.8661	1.0	0.04	108	4.26	102	4.02
51218	90	3.5433	135	5.3150	35	1.3780	1.0	0.04	117	4.61	108	4.26
51318	90	3.5433	155	6.1024	50	1.9685	1.5	0.06	129	5.08	116	4.57
51418X	90	3.5433	190	7.4803	77	3.0315	2.0	0.08	149	5.87	131	5.16
51120	100	3.9370	135	5.3150	25	0.9843	1.0	0.04	121	4.77	114	4.49
51220	100	3.9370	150	5.9055	38	1.4961	1.0	0.04	130	5.12	120	4.73
51320	100	3.9370	170	6.6929	55	2.1654	1.5	0.06	142	5.60	128	5.04
51420X	100	3.9370	210	8.2677	85	3.3465	2.5	0.10	165	6.50	145	5.71
51122	110	4.3307	145	5.7087	25	0.9843	1.0	0.04	131	5.16	124	4.89
51222	110	4.3307	160	6.2992	38	1.4961	1.0	0.04	140	5.52	130	5.12
51322X	110	4.3307	190	7.4803	63	2.4803	2.0	0.08	158	6.23	142	5.60
51422X	110	4.3307	230	9.0551	95	3.7402	2.5	0.10	181	7.13	159	6.27
51124	120	4.7244	155	6.1024	25	0.9843	1.0	0.04	141	5.56	134	5.28
51224	120	4.7244	170	6.6929	39	1.5354	1.0	0.04	150	5.91	140	5.52
51324X	120	4.7244	210	8.2677	70	2.7559	2.0	0.08	173	6.82	157	6.19
51424X	120	4.7244	250	9.8425	102	4.0157	3.0	0.12	196	7.72	174	6.86
51126	130	5.1181	170	6.6929	30	1.1811	1.0	0.04	154	6.07	146	5.75
51226X	130	5.1181	190	7.4803	45	1.7717	1.5	0.06	166	6.54	154	6.07
51326X	130	5.1181	225	8.8583	75	2.9528	2.0	0.08	186	7.33	169	6.66
51426X	130	5.1181	270	10.6299	110	4.3307	3.0	0.12	212	8.35	188	7.41
51128X	140	5.5118	180	7.0866	31	1.2205	1.0	0.04	164	6.46	156	6.15
51228X	140	5.5118	200	7.8740	46	1.8110	1.5	0.06	176	6.93	164	6.46
51328X	140	5.5118	240	9.4488	80	3.1496	2.0	0.08	199	7.84	181	7.13
51428X	140	5.5118	280	11.0236	112	4.4094	3.0	0.12	222	8.75	198	7.80
51130X	150	5.9055	190	7.4803	31	1.2205	1.0	0.04	174	6.86	166	6.54
51230X	150	5.9055	215	8.4646	50	1.9685	1.5	0.06	189	7.45	176	6.93
51330X	150	5.9055	250	9.8425	80	3.1496	2.0	0.08	209	8.24	191	7.53
51430X	150	5.9055	300	11.8110	120	4.7244	3.0	0.12	238	9.38	212	8.35
51132X	160	6.2992	200	7.8740	31	1.2205	1.0	0.04	184	7.25	176	6.93
51232X	160	6.2992	225	8.8583	51	2.0079	1.5	0.06	199	7.84	186	7.33
51332X	160	6.2992	270	10.6299	87	3.4252	2.5	0.10	225	8.87	205	8.08
51432X	160	6.2992	320	12.5984	130	5.1181	4.0	0.16	254	10.01	226	8.90

*Maximum fillet which corner radius of bearing will clear.

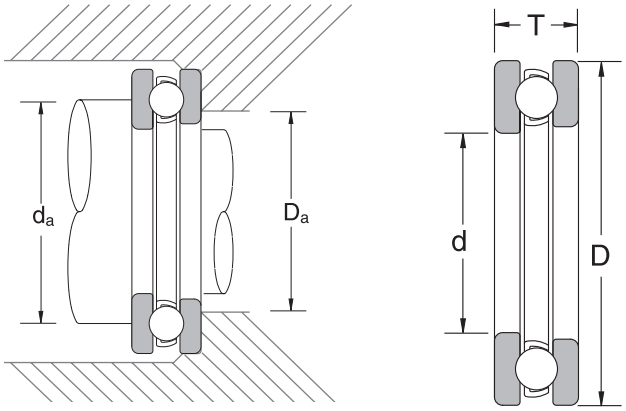

COMMON OPTIONS	
P5 (PA5)	ISO 5 / ABEC 5 Precision
P6 (PA3)	ISO 6 / ABEC 3 Precision

Bearing Number	Basic Load Ratings				Limiting Speeds (RPM)		Bearing Weight (Approx.)	
	C_a		C_{oa}					
	N	lbs	N	lbs	Grease	Oil	kg	lbs
51118	60000	13500	190000	42500	1900	3000	0.64	1.42
51218	114000	25600	310000	70000	1400	2200	1.69	3.73
51318	214000	48000	525000	118000	1100	1700	3.83	8.44
51418X	330000	74000	825000	186000	8000	1200	10.20	22.49
51120	86000	19300	268000	60500	1700	2600	0.96	2.12
51220	135000	30500	375000	84500	1300	2000	2.25	4.96
51320	239000	53500	595000	134000	1000	1500	4.98	10.98
51420X	370000	83500	985000	221000	7100	1100	14.80	32.63
51122	88000	19700	288000	64500	1700	2400	1.04	2.29
51222	136000	30500	395000	88500	1300	1900	2.42	5.34
51322X	282000	63500	755000	170000	9000	1300	7.18	15.83
51422X	415000	93000	1150000	259000	6300	1000	20.00	44.09
51124	90000	20200	310000	69000	1600	2400	1.12	2.47
51224	141000	32000	430000	97000	1200	1800	2.69	5.93
51324X	330000	74000	930000	209000	8000	1200	9.70	21.39
51424X	480000	108000	1400000	315000	6000	900	26.20	57.76
51126	105000	23500	350000	79000	1400	2000	1.68	3.70
51226X	183000	41000	550000	124000	1100	1600	3.95	8.71
51326X	350000	78500	1030000	231000	7500	1100	12.10	26.68
51426X	525000	118000	1590000	355000	5300	800	32.30	71.21
51128X	107000	242000	375000	85000	1300	2000	1.83	4.03
51228X	186000	42000	575000	130000	1000	1500	4.30	9.48
51328X	370000	83000	1130000	253000	6700	1000	15.60	34.39
51428X	550000	124000	1750000	395000	5300	800	34.70	76.50
51130X	110000	24800	400000	90500	1300	1900	1.94	4.28
51230X	238000	53500	735000	165000	9500	1400	5.51	12.15
51330X	380000	85500	1200000	270000	6700	1000	16.70	36.82
51430X	620000	139000	2010000	450000	4800	700	43.50	95.90
51132X	113000	25400	425000	96000	1200	1900	2.06	4.54
51232X	249000	56000	805000	181000	9000	1400	6.04	13.32
51332X	475000	106000	1570000	355000	6000	900	21.50	47.40
51432X	650000	146000	2210000	495000	4500	700	52.71	116.20

C_a = Dynamic Axial Load Rating C_{oa} = Static Axial Load Rating

BALL THRUST BEARINGS: DOUBLE DIRECTION, FLAT SEAT

BORE DIAMETER 10 – 65 MM

Bearing Number With Flat Seat	Boundary Dimensions										Basic Load Ratings				Limiting Speeds (RPM)		Bearing Weight (Approx.)	
	d_2		d		D_1		D		T_1		C_a		C_{oa}					
	mm	inch	mm	inch	mm	inch	mm	inch	mm	inch	N	lbs	N	lbs	Grease	Oil	kg	lbs
52202	10	0.3937	15	0.5906	17	0.6693	32	1.2598	22	0.8661	16700	3750	24800	5600	4800	7100	0.081	0.178
52204	15	0.5906	20	0.7874	22	0.8661	40	1.5748	26	1.0236	22500	5050	37500	8500	4000	6000	0.148	0.326
52405	15	0.5906	25	0.9843	27	1.0630	60	2.3622	45	1.7717	56000	12600	89500	20100	2400	3600	0.640	1.412
52205	20	0.7874	25	0.9843	27	1.0630	47	1.8504	28	1.1024	28000	6300	50500	11300	3400	5300	0.213	0.469
52305	20	0.7874	25	0.9843	27	1.0630	52	2.0472	34	1.3386	36000	8100	61500	13800	3000	4500	0.324	0.714
52406	20	0.7874	30	1.1811	32	1.2598	70	2.7559	52	2.0472	73000	16500	126000	28300	2200	3200	0.977	2.154
52206	25	0.9843	30	1.1811	32	1.2598	52	2.0472	29	1.1417	29500	6650	58000	13100	3200	5000	0.254	0.559
52306	25	0.9843	30	1.1811	32	1.2598	60	2.3622	38	1.4961	43000	9700	78500	17700	2600	4000	0.483	1.064
52407	25	0.9843	35	1.3780	37	1.4567	80	3.1496	59	2.3228	87500	19700	155000	35000	1800	2800	1.429	3.150
52207	30	1.1811	35	1.3780	37	1.4567	62	2.4409	34	1.3386	39500	8900	78000	17600	2800	4300	0.406	0.894
52307	30	1.1811	35	1.3780	37	1.4567	68	2.6772	44	1.7323	56000	12600	105000	23500	2400	3600	0.709	1.564
52208	30	1.1811	40	1.5748	42	1.6535	68	2.6772	36	1.4173	47500	10600	98500	22100	2600	3800	0.543	1.196
52308	30	1.1811	40	1.5748	42	1.6535	78	3.0709	49	1.9291	70000	15700	135000	30000	2000	3000	1.039	2.291
52408	30	1.1811	40	1.5748	42	1.6535	90	3.5433	65	2.5591	103000	23200	188000	42000	1700	2400	1.978	4.361
52209	35	1.3780	45	1.7717	47	1.8504	73	2.8740	37	1.4567	48000	10800	105000	23600	2400	3600	0.605	1.335
52309	35	1.3780	45	1.7717	47	1.8504	85	3.3465	52	2.0472	80500	18100	163000	36500	1900	2800	1.279	2.819
52409	35	1.3780	45	1.7717	47	1.8504	100	3.9370	72	2.8346	128000	28700	246000	55500	1500	2200	2.708	5.969
52210	40	1.5748	50	1.9685	52	2.0472	78	3.0709	39	1.5354	49000	11000	111000	25100	2400	3400	0.696	1.535
52310	40	1.5748	50	1.9685	52	2.0472	95	3.7402	58	2.2835	97500	21900	202000	45500	1700	2600	1.778	3.921
52410	40	1.5748	50	1.9685	52	2.0472	110	4.3307	78	3.0709	147000	33000	288000	65000	1400	2000	3.507	7.731
52211	45	1.7717	55	2.1654	57	2.2441	90	3.5433	45	1.7717	70000	15700	159000	35500	2000	3000	1.109	2.445
52311	45	1.7717	55	2.1654	57	2.2441	105	4.1339	64	2.5197	115000	26000	244000	55000	1500	2400	2.428	5.352
52411	45	1.7717	55	2.1654	57	2.2441	120	4.7244	87	3.4252	181000	40500	350000	78500	1200	1800	4.656	10.264
52212	50	1.9685	60	2.3622	62	2.4409	95	3.7402	46	1.8110	71500	16100	169000	38000	1900	3000	1.219	2.687
52312	50	1.9685	60	2.3622	62	2.4409	110	4.3307	64	2.5197	119000	26800	263000	59000	1500	2200	2.588	5.705
52412	50	1.9685	60	2.3622	62	2.4409	130	5.1181	93	3.6614	202000	45500	395000	89500	1100	1700	5.735	12.643
52413	50	1.9685	65	2.5591	68	2.6772	140	5.5118	101	3.9764	234000	52500	495000	111000	1000	1600	7.403	16.322
52213	55	2.1654	65	2.5591	67	2.6378	100	3.9370	47	1.8504	75500	17000	189000	42500	1900	2800	1.339	2.952
52313	55	2.1654	65	2.5591	67	2.6378	115	4.5276	65	2.5591	123000	27600	282000	63500	1500	2200	2.797	6.167
52214	55	2.1654	70	2.7559	72	2.8346	105	4.1339	47	1.8504	74000	16700	189000	42500	1800	2800	1.439	3.172
52314	55	2.1654	70	2.7559	72	2.8346	125	4.9213	72	2.8346	137000	31000	315000	70500	1300	2000	3.667	8.084
52414	55	2.1654	70	2.7559	73	2.8740	150	5.9055	107	4.2126	252000	56500	555000	124000	1000	1500	8.982	19.802
52215	60	2.3622	75	2.9528	77	3.0315	110	4.3307	47	1.8504	78000	17500	209000	47000	1800	2600	1.539	3.392
52315	60	2.3622	75	2.9528	77	3.0315	135	5.3150	79	3.1102	159000	35500	365000	82500	1200	1800	4.736	10.441
52415	60	2.3622	75	2.9528	78	3.0709	160	6.2992	115	4.5276	254000	57000	560000	126000	900	1400	10.790	23.789
52216	65	2.5591	80	3.1496	82	3.2283	115	4.5276	48	1.8898	79000	17800	218000	49000	1700	2600	1.659	3.656
52316	65	2.5591	80	3.1496	82	3.2283	140	5.5118	79	3.1102	164000	37000	395000	88500	1200	1800	4.986	10.991
52416	65	2.5591	80	3.1496	83	3.2677	170	6.6929	120	4.7244	272000	61000	620000	140000	850	1300	12.589	27.753
52417X	65	2.5591	85	3.3465	88	3.4646	180	7.0866	128	5.0394	310000	69500	755000	169000	800	1200	15.386	33.921

C_a = Dynamic Axial Load Rating C_{oa} = Static Axial Load Rating

BALL THRUST BEARINGS: DOUBLE DIRECTION, FLAT SEAT

BORE DIAMETER 70 – 190 MM

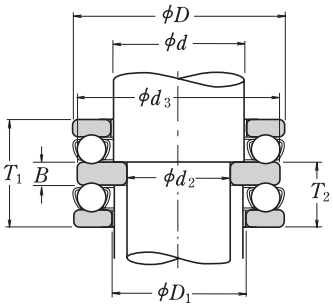

With Flat Seat

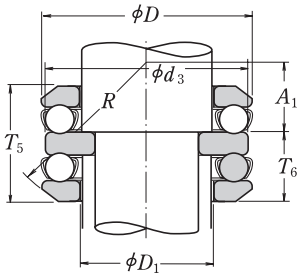

With Aligning Seat

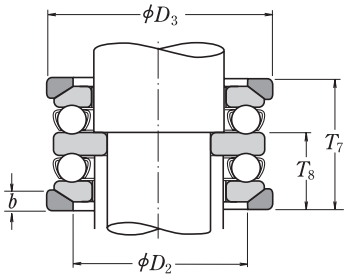

With Aligning Seat Washer

Bearing Number With Flat Seat	Boundary Dimensions										Basic Load Ratings				Limiting Speeds (RPM)		Bearing Weight (Approx.)	
	d_2		d		D_1		D		T_1		C_a		C_{oa}					
	mm	inch	mm	inch	mm	inch	mm	inch	mm	inch	N	lbs	N	lbs	Grease	Oil	kg	lbs
52217	70	2.7559	85	3.3465	88	3.4646	125	4.9213	55	2.1654	96000	21600	264000	59500	1500	2200	2.258	4.978
52317	70	2.7559	85	3.3465	88	3.4646	150	5.9055	87	3.4252	207000	46500	490000	110000	1100	1600	6.374	14.053
52418X	70	2.7559	90	3.5433	93	3.6614	190	7.4803	135	5.3150	330000	74000	825000	186000	750	1100	17.484	38.546
52218	75	2.9528	90	3.5433	93	3.6614	135	5.3150	62	2.4409	114000	25600	310000	70000	1400	2000	3.087	6.806
52318	75	2.9528	90	3.5433	93	3.6614	155	6.1024	88	3.4646	214000	48000	525000	118000	1100	1600	6.784	14.956
52420X	80	3.1496	100	3.9370	103	4.0551	210	8.2677	150	5.9055	370000	83500	985000	221000	670	1000	26.776	59.031
52220	85	3.3465	100	3.9370	103	4.0551	150	5.9055	67	2.6378	135000	30500	375000	84500	1300	1900	4.076	8.987
52320	85	3.3465	100	3.9370	103	4.0551	170	6.6929	97	3.8189	239000	53500	595000	134000	950	1500	8.812	19.427
52422X	90	3.5433	110	4.3307	113	4.4488	230	9.0551	166	6.5354	415000	93000	1150000	259000	600	900	35.568	78.414
52222	95	3.7402	110	4.3307	113	4.4488	160	6.2992	67	2.6378	136000	30500	395000	88500	1200	1800	4.386	9.670
52322X	95	3.7402	110	4.3307	113	4.4488	190	7.4803	110	4.3307	282000	63500	755000	170000	850	1300	12.689	27.974
52424X	95	3.7402	120	4.7244	123	4.8425	250	9.8425	177	6.9685	515000	115000	1540000	345000	560	850	47.557	104.846
52224	100	3.9370	120	4.7244	123	4.8425	170	6.6929	68	2.6772	141000	32000	430000	97000	1200	1800	4.916	10.837
52324X	100	3.9370	120	4.7244	123	4.8425	210	8.2677	123	4.8425	330000	74000	930000	209000	750	1100	17.584	38.767
52426X	100	3.9370	130	5.1181	134	5.2756	270	10.6299	192	7.5591	525000	118000	1590000	355000	530	800	57.748	127.313
52226X	110	4.3307	130	5.1181	133	5.2362	190	7.4803	80	3.1496	183000	41000	550000	124000	1000	1500	7.423	16.366
52326X	110	4.3307	130	5.1181	134	5.2756	225	8.8583	130	5.1181	350000	78500	1030000	231000	710	1100	21.481	47.357
52428X	110	4.3307	140	5.5118	144	5.6693	280	11.0236	196	7.7165	550000	124000	1750000	395000	500	750	62.344	137.445
52228X	120	4.7244	140	5.5118	143	5.6299	200	7.8740	81	3.1890	186000	42000	575000	130000	1000	1500	8.003	17.643
52328X	120	4.7244	140	5.5118	144	5.6693	240	9.4488	140	5.5118	370000	83000	1130000	253000	670	1000	24.778	54.626
52430X	120	4.7244	150	5.9055	153	6.0236	300	11.8110	209	8.2283	620000	139000	2010000	450000	480	710	77.730	171.366
52230X	130	5.1181	150	5.9055	153	6.0236	215	8.4646	89	3.5039	238000	53500	735000	165000	900	1300	10.391	22.907
52330X	130	5.1181	150	5.9055	154	6.0630	250	9.8425	140	5.5118	380000	85500	1200000	270000	630	950	30.273	66.740
52432X	130	5.1181	160	6.2992	164	6.4567	320	12.5984	226	8.8976	650000	146000	2210000	495000	430	630	93.516	206.167
52434X	135	5.3150	170	6.6929	174	6.8504	340	13.3858	236	9.2913	715000	161000	2480000	560000	400	600	109.901	242.291
52232X	140	5.5118	160	6.2992	163	6.4173	225	8.8583	90	3.5433	249000	56000	805000	181000	850	1300	11.190	24.670
52332X	140	5.5118	160	6.2992	164	6.4567	270	10.6299	153	6.0236	475000	106000	1570000	355000	600	900	35.068	77.313
52436X	140	5.5118	180	7.0866	184	7.2441	360	14.1732	245	9.6457	750000	168000	2730000	615000	380	560	125.887	277.533
52234X	150	5.9055	170	6.6929	173	6.8110	240	9.4488	97	3.8189	280000	63000	915000	205000	800	1200	13.588	29.956
52334X	150	5.9055	170	6.6929	174	6.8504	280	11.0236	153	6.0236	465000	105000	1570000	355000	560	850	40.763	89.868
52236X	150	5.9055	180	7.0866	183	7.2047	250	9.8425	98	3.8583	284000	64000	955000	214000	800	1200	14.787	32.599
52336X	150	5.9055	180	7.0866	184	7.2441	300	11.8110	165	6.4961	480000	108000	1680000	375000	530	800	46.258	101.982
52238X	160	6.2992	190	7.4803	194	7.6378	270	10.6299	109	4.2913	330000	74000	1160000	260000	710	1100	22.080	48.678
52338X	160	6.2992	190	7.4803	195	7.6772	320	12.5984	183	7.2047	550000	123000	1960000	440000	480	710	112.899	248.899
52240X	170	6.6929	200	7.8740	204	8.0315	280	11.0236	109	4.2913	315000	710000	1110000	249000	710	1000	23.079	50.881
52340X	170	6.6929	200	7.8740	205	8.0709	340	13.3858	192	7.5591	600000	135000	2222000	500000	450	670	78.330	172.687
52244X	190	7.4803	220	8.6614	224	8.8189	300	11.8110	110	4.3307	325000	73500	1210000	271000	670	1000	25.177	55.507

C_a = Dynamic Axial Load Rating C_{oa} = Static Axial Load Rating

SPHERICAL ROLLER THRUST BEARINGS

Basic Type & Design
292xx: Spherical Roller Thrust, Light
293xx: Spherical Roller Thrust, Medium
294xx: Spherical Roller Thrust, Heavy

293

26

Bore Size
(05 and up: multiply last two numbers by 5 to get bore in mm)

05:	25 mm	**48:**	240 mm
20:	100 mm	**96:**	480 mm

500 millimeters and larger written as:

/500:	500 mm	**/710:**	710 mm
/630:	630 mm	**/1000:**	1000 mm

Cage Option
E: Pressed Steel*
M: Machined Brass (not always shown in the part number)

E

Please refer to the bearing tables for exact part number options

*The "E" designation has replaced the "H." This is nomenclature change only, not a design change.

INTERCHANGE

Description		Interchange			
		NSK	SKF	FAG	TORR/TIMKEN
Part Number	Light	292xx	292xx	292xx	292xx
	Medium	293xx	293xx	293xx	293xx
	Heavy	294xx	294xx	294xx	294xx
Suffix	Steel Cage	E	EJ	E	EJ
	Brass Cage	M	M	EMB	EM

The competitive manufacturers are provided for a convenient source of unit substitution. They can be considered interchangeable in most instances, but for special applications, please contact NSK. NSK assumes no liability with respect to errors or omissions.

APPLICATIONS

Listed below are popular applications for the spherical roller thrust bearings. Also available, but not shown, are cylindrical roller thrust bearings (TMP) and tapered roller thrust bearings (TT, TTF or V-Flat). Please consult an NSK representative for more information.

The spherical roller thrust bearings are designed to handle very heavy thrust loads in one direction while operating at low to moderate speeds. The design of the spherical roller thrust will also allow for some radial load while thrust load is imposed. The spherical shape of the outer ring raceway makes these bearings excellent for handling misalignment.

› Deep Well Pumps › Centrifugal Pumps › Power Plant Preheater › Coal Pulverizer › Plastic Forming Equipment › Crane Hook › Industrial Gear Boxes › Axial Piston Pumps

SPHERICAL ROLLER THRUST BEARINGS

BORE DIAMETER 60 – 190 MM, 2.3622 – 7.4803 INCH

Bearing Number	Nominal Bearing Dimensions											
	d		D		T		d_1		D_1		C	
	mm	inch	mm	inch	mm	inch	mm	inch	mm	inch	mm	inch
29412E	60	2.3622	130	5.1181	42	1.6535	114.5	4.5	89.0	3.5	20	0.8
29413E	65	2.5591	140	5.5118	45	1.7717	121.5	4.8	93.0	3.7	22	0.9
29414E	70	2.7559	150	5.9055	48	1.8898	131.5	5.2	102.0	4.0	24	0.9
29415E	75	2.9528	160	6.2992	51	2.0079	138.0	5.4	107.0	4.2	25	1.0
29416E	80	3.1496	170	6.6929	54	2.1260	148.0	5.8	114.5	4.5	27	1.1
29317E	85	3.3465	150	5.9055	39	1.5354	134.5	5.3	112.0	4.4	19	0.7
29417E	85	3.3465	180	7.0866	58	2.2935	156.5	6.2	124.0	4.9	28	1.1
29318E	90	3.5433	150	6.1024	39	1.5354	139.5	5.5	118.0	4.6	19	0.7
29418E	90	3.5433	190	7.4803	60	2.3622	165.5	6.5	129.5	5.1	29	1.1
29320E	100	3.9370	170	6.6929	42	1.6535	152.0	6.0	128.0	5.0	21	0.8
29420E	100	3.9370	210	8.2677	67	2.6378	185.0	7.3	144.0	5.7	33	1.3
29322E	110	4.3307	190	7.4803	48	1.8898	169.5	6.7	142.5	5.6	24	0.9
29422E	110	4.3307	230	9.0551	73	2.8740	200.0	7.9	157.0	6.2	36	1.4
29324E	120	4.7244	210	8.2677	54	2.1260	187.5	7.4	156.5	6.2	27	1.1
29424E	120	4.7244	250	9.8425	78	3.0709	215.0	8.5	171.0	6.7	38	1.5
29326E	130	5.1181	225	8.8583	58	2.2835	203.5	8.0	168.5	6.6	28	1.1
29426E	130	5.1181	270	10.6299	85	3.3465	235.0	9.3	185.0	7.3	42	1.7
29328E	140	5.5118	240	9.4488	60	2.3622	216.5	8.5	179.0	7.0	30	1.2
29428E	140	5.5118	280	11.0236	85	3.3465	244.5	9.6	195.5	7.7	42	1.7
29330E	150	5.9055	250	9.9425	60	2.3622	224.0	8.8	190.0	7.5	29	1.1
29430E	150	5.9055	300	11.8110	90	3.5433	266.0	10.5	209.0	8.2	44	1.7
29332E	160	6.2992	270	10.6299	67	2.6378	243.0	9.6	203.0	8.0	33	1.3
29432E	160	6.2992	320	12.5984	95	3.7402	278.0	10.9	224.5	8.8	46	1.8
29334E	170	6.6929	280	11.0236	67	2.6378	252.0	9.9	214.5	8.4	32	1.3
29434	170	6.6929	340	13.3958	103	4.0551	310.0	12.2	243.0	9.6	50	2.0
29336E	180	7.0866	300	11.8110	73	2.8740	270.0	10.6	227.0	8.9	36	1.4
29436	180	7.0866	360	14.1732	109	4.2913	330.0	13.0	255.0	10.0	52	2.0
29338E	190	7.4803	320	12.5984	78	3.0709	288.5	11.4	244.0	9.6	38	1.5
29438	190	7.4803	380	14.9606	115	4.5276	345.0	13.6	271.0	10.7	55	2.2

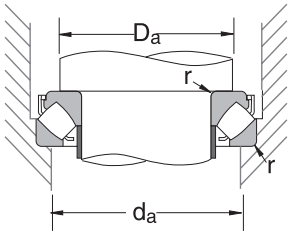

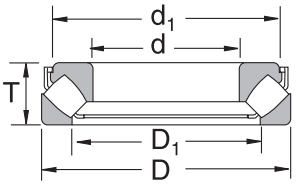

COMMON OPTIONS	
E*	Stamped Steel Cage
M**	Machined Brass Cage

*The "E" designation has replaced the "H". This is a nomenclature change only, not a design change.

**May not be shown in part number

Bearing Number	Preferred Shoulder Diameters						Basic Load Ratings				Limiting Speeds (RPM)	Bearing Weight (Approx.)	
	r*		D_a min		d_a min		C_a		C_{oa}				
	mm	inch	mm	inch	mm	inch	N	lbs	N	lbs	Oil	kg	lbs
29412E	1.5	0.06	90	3.5	108	4.3	330000	74500	885000	199000	2600	2.5	5.6
29413E	2.0	0.08	100	3.9	115	4.5	405000	91000	1100000	248000	2400	3.2	7.1
29414E	2.0	0.08	105	4.1	125	4.9	450000	102000	1240000	278000	2200	0.9	8.6
29415E	2.0	0.08	115	4.5	132	5.2	515000	116000	1430000	320000	2200	4.7	10.3
29416E	2.0	0.08	120	4.7	140	5.5	575000	129000	1600000	360000	2000	5.5	12.2
29317E	1.5	0.06	115	4.5	135	5.3	330000	74500	1040000	233000	2200	2.7	6.0
29417E	2.0	0.08	130	5.1	150	5.9	630000	142000	1760000	395000	1900	6.5	14.4
29318E	1.5	0.06	120	4.7	140	5.5	350000	78500	1080000	244000	2200	2.8	6.3
29418E	2.0	0.08	135	5.3	157	6.2	695000	156000	1950000	440000	1800	7.5	16.6
29320E	1.5	0.06	130	5.1	150	5.9	410000	92000	1280000	288000	2000	3.6	8.0
29420E	2.5	0.10	150	5.9	175	6.9	840000	189000	2400000	540000	1600	10.3	22.7
29322E	2.0	0.08	145	5.7	165	6.5	530000	119000	1710000	385000	1800	5.3	11.6
29422E	2.5	0.10	165	6.5	190	7.5	1010000	227000	2930000	660000	1400	13.3	29.3
29324E	2.0	0.08	160	6.3	180	7.1	645000	144000	2100000	475000	1600	7.3	16.1
29424E	3.0	0.12	180	7.1	205	8.1	1160000	262000	3400000	765000	1400	16.6	36.5
29326E	2.0	0.08	170	6.7	195	7.7	740000	166000	2450000	550000	1500	8.9	19.7
29426E	3.0	0.12	195	7.7	225	8.9	1330000	298000	3900000	880000	1200	21.1	46.5
29328E	2.0	0.08	185	7.3	205	8.1	840000	189000	2810000	630000	1400	10.4	22.9
29428E	3.0	0.12	205	8.1	235	9.3	1370000	310000	4200000	940000	1200	22.2	49.0
29330E	2.0	0.08	195	7.7	215	8.5	870000	196000	2900000	650000	1400	10.8	23.8
29430E	3.0	0.12	220	8.7	250	9.8	1580000	355000	4900000	1100000	1100	27.2	60.0
29332E	2.5	0.10	223	8.8	235	9.3	1010000	226000	3400000	765000	1300	14.3	31.5
29432E	4.0	0.16	230	9.1	265	10.4	1740000	390000	5400000	1220000	1100	32.1	70.8
29334E	2.5	0.10	220	8.7	245	9.6	1050000	235000	3500000	785000	1200	14.7	32.5
29434	4.0	0.16	245	9.6	285	11.2	1680000	375000	5800000	1310000	100	43.5	96.0
29336E	2.5	0.10	235	9.3	260	10.2	1230000	277000	4200000	945000	1100	19.3	42.5
29436	4.0	0.16	260	10.2	300	11.8	1870000	420000	6500000	1460000	900	52.2	115.0
29338E	3.0	0.12	250	9.8	275	10.8	1370000	310000	4700000	1060000	1000	22.9	50.5
29438	4.0	0.16	275	10.8	320	12.6	2100000	475000	7450000	1670000	900	59.9	132.0

*Maximum fillet which corner radius of bearing will clear.

C_a = Dynamic Axial Load Rating

C_{oa} = Static Axial Load Rating

SPHERICAL ROLLER THRUST BEARINGS (CONT.)

BORE DIAMETER 200 - 360 MM, 7.8740 – 14.1732 INCH

Bearing Number	Nominal Bearing Dimensions											
	d		D		T		d_1		D_1		C	
	mm	inch	mm	inch	mm	inch	mm	inch	mm	inch	mm	inch
29240	200	7.8740	280	11.0236	48	1.8898	266	10.472	236	9.291	24	0.945
29340E	200	7.8740	340	13.3858	85	3.3465	307	12.067	257	10.118	41	1.614
29440	200	7.8740	400	15.7480	122	4.8031	365	14.370	280	11.024	59	2.323
29244	220	8.6614	300	11.8110	48	1.8898	285	11.220	254	10.000	24	0.945
29344	220	8.6614	360	14.1732	85	3.3465	335	13.189	280	11.024	41	1.614
29444	220	8.6614	420	16.5354	122	4.8031	385	15.157	308	12.126	58	2.283
29248	240	9.4488	340	13.3858	60	2.3622	325	12.795	283	11.142	30	1.181
29348	240	9.4488	380	14.9606	85	3.3465	355	13.976	300	11.811	41	1.614
29448	240	9.4488	440	17.3228	122	4.8031	405	15.945	326	12.835	59	2.323
29252	260	10.2362	360	14.1732	60	2.3622	345	13.583	302	11.890	30	1.181
29352	260	10.2362	420	16.5354	95	3.7402	390	15.354	329	12.953	45	1.772
29452	260	10.2362	480	18.8976	132	5.1969	445	17.520	357	14.055	64	2.520
29256	280	11.0236	380	14.9606	60	2.3622	365	14.370	323	12.717	30	1.181
29356	280	11.0236	440	17.3228	95	3.7402	480	18.898	384	15.118	46	1.811
29456	280	11.0236	520	20.4724	145	5.7087	480	18.898	384	15.118	68	2.677
29260	300	11.8110	420	16.9540	73	2.8740	400	15.748	353	13.898	38	1.496
29360	300	11.8110	480	18.8976	109	4.2913	450	17.717	379	14.921	50	1.969
29460	300	11.8110	540	21.2598	145	5.7087	500	19.685	402	15.827	70	2.756
29264	320	12.5984	440	17.3228	73	2.8740	420	16.535	372	14.646	38	1.496
29364	320	12.5984	500	19.6850	109	4.2913	470	18.504	399	15.709	53	2.087
29464	320	12.5984	580	22.8346	155	6.1024	555	21.850	436	17.165	75	2.953
29268	340	13.3858	460	11.1102	73	2.8740	440	17.323	395	15.551	37	1.457
29368	340	13.3858	540	21.2598	122	4.8031	510	20.079	428	16.850	59	2.323
29468	340	13.3858	620	24.4094	170	6.6929	590	23.228	462	18.189	82	3.228
29272	360	14.1732	500	19.6850	85	3.3465	480	18.898	423	16.654	44	1.732
29372	360	14.1732	560	22.0472	122	4.8031	525	20.669	448	17.638	59	2.323
29472	360	14.1732	640	25.1969	170	6.6929	610	24.016	480	18.898	82	3.228

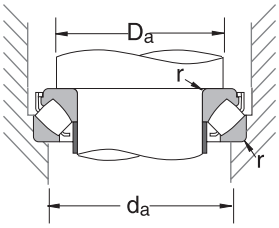

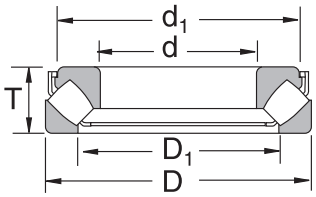

COMMON OPTIONS	
E*	Stamped Steel Cage
M**	Machined Brass Cage

*The "E" designation has replaced the "H". This is a nomenclature change only, not a design change.

**May not be shown in part number

Bearing Number	Preferred Shoulder Diameters						Basic Load Ratings				Limiting Speeds (RPM)	Bearing Weight (Approx.)	
	r*		D_a min		d_a min		C_a		C_{oa}				
	mm	inch	mm	inch	mm	inch	N	lbs	N	lbs	Oil	kg	lbs
29240	2.0	0.079	235	9.252	255	10.039	540000	121000	2310000	520000	1500	8.53	18.8
29340E	3.0	0.118	265	10.433	295	11.614	1570000	355000	5450000	1230000	1000	28.58	63.0
29440	4.0	0.157	290	11.417	335	13.189	2290000	515000	8150000	1840000	800	68.95	152.0
29244	2.0	0.079	260	10.236	275	10.827	560000	126000	2500000	560000	1400	9.07	20.0
29344	3.0	0.118	285	11.220	315	12.402	1340000	300000	5200000	1170000	950	33.11	73.0
29444	5.0	0.197	310	12.205	355	13.976	2350000	530000	8650000	1940000	800	73.94	163.0
29248	2.0	0.079	285	11.220	305	12.008	800000	180000	3450000	775000	1200	16.78	37.0
29348	3.0	0.118	300	11.811	330	12.992	1360000	305000	5400000	1210000	900	35.83	79.0
29448	5.0	0.197	330	12.992	375	14.764	2420000	545000	9100000	2050000	750	78.93	174.0
29252	2.0	0.079	305	12.008	325	12.795	855000	193000	3850000	870000	1200	18.14	40.0
29352	4.0	0.157	330	12.992	365	14.370	1700000	380000	6800000	1530000	800	48.53	107.0
29452	5.0	0.197	360	14.173	405	15.945	2820000	635000	10700000	2400000	710	104.78	231.0
29256	2.0	0.079	325	12.795	345	13.583	885000	199000	4100000	920000	1100	19.05	42.0
29356	4.0	0.157	350	13.780	390	15.354	1830000	410000	7650000	1720000	800	52.62	116.0
29456	5.0	0.197	390	15.354	440	17.323	3400000	765000	13100000	2930000	630	132.00	291.0
29260	2.5	0.098	355	13.976	380	14.961	1160000	260000	5150000	1160000	950	29.94	66.0
29360	4.0	0.157	380	14.961	420	16.535	2190000	495000	9100000	2040000	710	73.94	163.0
29460	5.0	0.197	410	16.142	460	18.110	3500000	780000	13700000	3050000	600	140.61	310.0
29264	2.5	0.098	375	14.764	400	15.748	1190000	268000	5450000	1230000	950	32.43	71.5
29364	4.0	0.157	400	15.748	440	17.323	2230000	500000	9400000	2120000	670	77.11	170.0
29464	6.0	0.236	435	17.126	495	19.488	3650000	820000	14600000	3300000	560	174.63	385.0
29268	2.5	0.098	395	15.551	420	16.535	1230000	275000	5750000	1300000	900	33.57	74.0
29368	4.0	0.157	430	16.929	470	18.504	2640000	595000	11200000	2510000	630	102.97	227.0
29468	6.0	0.236	465	18.307	530	20.866	4400000	985000	17400000	3900000	530	217.72	480.0
29272	3.0	0.118	420	16.535	455	17.913	1550000	350000	7300000	1640000	800	50.80	112.0
29372	4.0	0.157	450	17.717	495	19.488	2670000	600000	11500000	2590000	600	107.05	236.0
29472	6.0	0.236	485	19.094	550	21.654	4200000	950000	17200000	3850000	500	229.06	505.0

*Maximum fillet which corner radius of bearing will clear.

C_a = Dynamic Axial Load Rating

C_{oa} = Static Axial Load Rating

SPHERICAL ROLLER THRUST BEARINGS (CONT.)

BORE DIAMETER 380 - 500 MM, 14.9606 – 19.6850 INCH

Bearing Number	Nominal Bearing Dimensions											
	d		D		T		d_1		D_1		C	
	mm	inch	mm	inch	mm	inch	mm	inch	mm	inch	mm	inch
29276	380	14.9606	520	20.4724	85	3.3465	496	19.528	441	17.362	42	1.65
29376	380	14.9606	600	23.6220	132	5.1969	568	22.362	477	18.780	63	2.48
29476	380	14.9606	670	26.3780	175	6.8898	640	25.197	504	19.843	85	3.35
29280	400	15.7480	540	21.2598	85	3.3465	527	20.354	460	18.110	42	1.65
29380	400	15.7480	620	24.4094	132	5.1969	590	23.228	494	19.449	64	2.52
29480	400	15.7480	710	27.9528	185	7.2935	680	26.772	536	21.102	89	3.50
29284	420	16.5354	580	22.8346	95	3.7402	553	21.772	489	19.252	46	1.81
29384	420	16.5354	650	25.5906	140	5.5118	620	24.409	520	20.472	68	2.68
29484	420	16.5354	730	28.7402	185	7.2835	700	27.559	556	21.890	89	3.50
29288	440	17.3228	600	23.6220	95	3.7402	575	22.638	508	20.000	49	1.93
29388	440	17.3228	680	26.7717	145	5.7087	645	25.394	319	12.575	70	2.76
29488	440	17.3228	780	30.7087	206	8.1102	745	29.331	588	23.150	100	3.94
29292	460	18.1102	620	24.4094	95	3.7402	592	23.307	530	20.866	46	1.81
29392	460	18.1102	710	27.9528	150	5.9055	666	26.220	567	22.323	72	2.84
29492	460	18.1102	800	31.4961	206	8.1102	765	30.118	608	23.937	100	3.94
29296	480	18.8976	650	25.5906	103	4.0551	624	24.567	556	21.890	55	2.17
29396	480	18.8976	730	28.7402	150	5.9055	690	27.165	590	23.228	72	2.84
29496	480	18.8976	850	33.4646	224	8.8189	810	31.890	638	25.118	108	4.25
292/500	500	19.6850	670	26.3780	103	4.0551	645	25.394	574	22.598	55	2.17
293/500	500	19.6850	750	29.5276	150	5.9055	715	28.150	611	24.055	74	2.91
294/500	500	19.6850	870	34.2520	224	8.8189	830	32.677	661	26.024	107	4.21

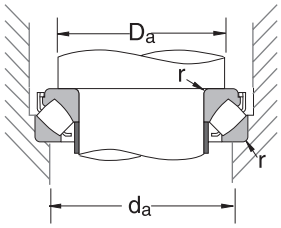

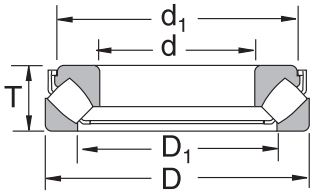

COMMON OPTIONS	
E*	Stamped Steel Cage
M**	Machined Brass Cage

*The "E" designation has replaced the "H". This is a nomenclature change only, not a design change.

**May not be shown in part number

Bearing Number	Preferred Shoulder Diameters						Basic Load Ratings				Limiting Speeds (RPM)	Bearing Weight (Approx.)	
	r*		D_a min		d_a min		C_a		C_{oa}				
	mm	inch	mm	inch	mm	inch	N	lbs	N	lbs	Oil	kg	lbs
29276	3	0.118	440	17.3230	475	18.7010	1620000	365000	7800000	1750000	750	52.2	115
29376	5	0.197	480	18.8980	525	20.6690	3300000	740000	14200000	3200000	5600	140.6	310
29476	6	0.236	510	20.0790	575	22.6380	4800000	1080000	19500000	4400000	480	254.0	560
29280	3	0.118	460	18.1100	490	19.2910	1640000	370000	8000000	1800000	750	54.9	121
29380	5	0.197	500	19.6850	550	21.6540	3250000	725000	14500000	3250000	530	149.7	330
29480	6	0.236	540	21.2600	610	24.0160	5350000	1210000	22100000	4950000	450	306.2	675
29284	4	0.157	490	19.2910	525	20.6690	2010000	450000	9800000	2210000	670	72.1	159
29384	5	0.197	525	20.6690	575	22.6380	3600000	805000	16000000	3600000	500	170.1	375
29484	6	0.236	560	22.0470	630	24.8030	5650000	1270000	23500000	5300000	430	322.1	710
29288	4	0.157	510	20.0790	545	21.4570	2030000	455000	10100000	2260000	670	77.1	170
29388	5	0.197	550	21.6540	600	23.6220	3750000	840000	16700000	3750000	480	190.5	420
29488	8	0.315	595	23.4250	670	26.3780	6550000	1470000	27200000	6100000	400	408.2	900
29292	4	0.157	530	20.8660	570	22.4410	2060000	460000	10300000	2320000	630	79.8	176
29392	5	0.197	575	22.6380	630	24.8030	4100000	920000	18400000	4150000	450	210.9	465
29492	8	0.315	615	24.2130	690	27.1650	6750000	1520000	28600000	6450000	380	419.6	925
29296	4	0.157	555	21.8500	595	23.4250	2370000	530000	12100000	2730000	600	97.1	214
29396	5	0.197	595	23.4250	650	25.5910	4150000	935000	19000000	4250000	450	215.5	475
29496	8	0.315	645	25.3940	730	28.7400	7200000	1610000	31000000	7000000	360	544.3	1200
292/500	4	0.157	575	22.6380	615	24.2130	2390000	535000	12400000	2790000	600	99.8	220
293/500	5	0.197	615	24.2130	670	26.3780	4350000	980000	20400000	4600000	450	220.0	485
294/500	8	0.315	670	26.3780	750	29.5280	7850000	1760000	33000000	7450000	340	557.9	1230

*Maximum fillet which corner radius of bearing will clear.

C_a = Dynamic Axial Load Rating

C_{oa} = Static Axial Load Rating

TAPERED ROLLER THRUST BEARINGS

Bore Size
Metric : exact Inch: Rounded
76: 76.2mm (3.0")
101: 101.6mm (4.0")
150: 150mm

150

TTF

Basic Type
TT: Tapered Roller Thrust
TTF: Tapered Roller Thrust Flat (See diagram)

Outer Diameter Size (Approximate)
30: 300mm
24: 245mm
31: 311.15mm (12.5")

30

01

Tolerance Type
1st Digit 0-4: Metric Tolerance
1st Digit 5-9: Inch Tolerance
2nd Digit: Design Sequence Number

Special Material
G: Case Hardened
G2: Outer Ring only
G3: Inner Ring only
G4: Rollers only

G

P5

Precision Class
Blank: Normal
P6: Class 6
P5: Class 5

Please refer to the bearing tables for exact part number options.

APPLICATIONS

Tapered roller thrust bearings contain tapered rollers. TT type bearings, which have a rib on the housing washer, can accurately guide the shaft in the radial direction. TTF – type bearings, which have no rib on the housing washer, can tolerate some eccentricity during operation.

› **Construction Equipment** › **Rolling Mill Applications** › **Swivels of Drilling Rigs** › **Crane Hooks**

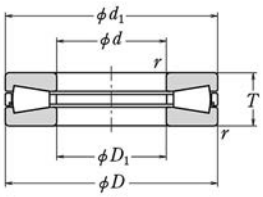

TT

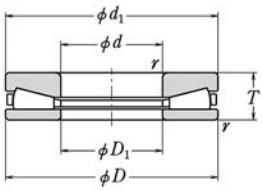

TTF

Bearing Number	Boundary Dimensions								Basic Load Ratings				Dimensions					
	d		D		T		r min		C_a		C_{0a}		D_1		d_1		r_a max	
	mm	inch	mm	inch	mm	inch	mm	inch	N	lbs	N	lbs	mm	inch	mm	inch	mm	inch
*76TT1651	76.2	3.0000	161.925	6.3750	33.338	1.3125	3.3	0.13	380000	85000	1460000	330000	76.4	3.01	161.9	6.38	3.3	0.13
*101TT2151	101.6	4.0000	215.900	8.5000	46.038	1.8125	3.3	0.13	710000	160000	2900000	650000	103.2	4.06	214.3	8.44	3.3	0.13
*127TTF2651	127.0	5.0000	266.700	10.5000	58.738	2.3125	4.8	0.19	1040000	235000	4350000	975000	128.6	5.06	265.1	10.44	4.8	0.19
150TTF3001	150.0	5.9055	300.000	11.8110	90.000	3.5433	5.0	0.20	1470000	330000	6300000	1410000	152.0	5.98	306.0	12.05	4.0	0.16

*Bearings are inch design.

CYLINDRICAL ROLLER THRUST BEARINGS

Bore Size
30: 30 mm
150: 150 mm
300: 300 mm

65

TMP

Basic Type
TMP: Cylindrical Roller Thrust

Dimension Series
11
12
93
94

12

P5

Precision Class
Blank: Normal
P6: Class 6
P5: Class 5

Please refer to the bearing tables for exact part number options.

Thrust Bearings

APPLICATIONS

Cylindrical roller thrust bearings contain cylindrical rollers. They can sustain only axial loads, but they are suitable for heavy loads and have high axial rigidity. The cages are machined brass.

› Gear Boxes › Crane Hooks › Oil Well Swivels › Cone Pumps › Winch Systems

CYLINDRICAL ROLLER THRUST BEARINGS

BORE DIAMETER 65 – 260 MM

Bearing Number	Boundary Dimensions								Dimensions							
	d		D		T		r min		d_1		D_1		D_w		t	
	mm	inch	mm	inch	mm	inch	mm	inch	mm	inch	mm	inch	mm	inch	mm	inch
65 TMP 12	65	2.5591	100	3.9370	27	1.0630	1.0	0.04	100	3.94	67	2.6	12.5	0.5	7.3	0.3
110 TMP 12	110	4.3307	160	6.2992	38	1.4961	1.1	0.04	160	6.30	113	4.4	15.0	0.6	11.5	0.5
130 TMP 12	130	5.1181	190	7.4803	45	1.7717	1.5	0.06	187	7.36	133	5.2	19.0	0.7	13.0	0.5
130 TMP 93	130	5.1181	225	8.8583	58	2.2835	2.1	0.08	225	8.86	133	5.2	22.0	0.9	18.0	0.7
150 TMP 12	150	5.9055	215	8.4646	50	1.9685	2.0	0.08	215	8.46	153	6.0	19.0	0.7	15.5	0.6
150 TMP 93	150	5.9055	250	9.8425	60	2.3622	2.1	0.08	250	9.84	153	6.0	25.0	1.0	17.5	0.7
160 TMP 93	160	6.2992	270	10.6299	67	2.6378	3.0	0.12	265	10.43	164	6.5	25.0	1.0	21.0	0.8
170 TMP 12	170	6.6929	240	9.4488	55	2.1654	1.5	0.06	237	9.33	173	6.8	22.0	0.9	16.5	0.6
170 TMP 93	170	6.6929	280	11.0236	67	2.6378	3.0	0.12	280	11.02	173	6.8	25.0	1.0	21.0	0.8
180 TMP 94	180	7.0866	360	14.1732	109	4.2913	5.0	0.20	354	13.94	189	7.4	45.0	1.8	32.0	1.3
190 TMP 12	190	7.4803	270	10.6299	62	2.4409	3.0	0.12	266	10.47	195	7.7	30.0	1.2	16.0	0.6
190 TMP 93	190	7.4803	320	12.5984	78	3.0709	4.0	0.16	320	12.60	195	7.7	32.0	1.3	23.0	0.9
220 TMP 11	220	8.6614	270	10.6299	37	1.4567	1.1	0.04	267	10.51	223	8.8	17.0	0.7	10.0	0.4
260 TMP 12	260	10.2362	360	14.1732	79	3.1102	2.1	0.08	355	13.98	264	10.4	32.0	1.3	23.5	0.9

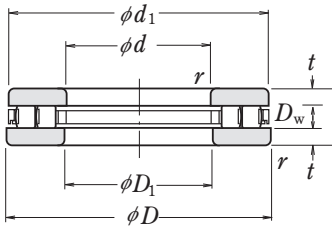

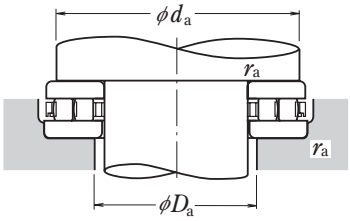

Bearing Number	Abutment and Fillet Dimensions						Basic Load Ratings				Limiting Speeds (RPM)		Bearing Weight (Approx.)	
	d_a min		D_a max		r_a max		C_a		C_{oa}					
	mm	inch	mm	inch	mm	inch	N	lbs	N	lbs	Grease	Oil	kg	lbs
65 TMP 12	93	3.7	71	2.8	1.0	0.04	110000	24800	325000	73000	950	2800	0.81	1.77
110 TMP 12	150	5.9	119	4.7	1.0	0.04	228000	51500	855000	192000	630	1900	2.66	5.85
130 TMP 12	177	7.0	142	5.6	1.5	0.06	300000	68000	1090000	245000	530	1600	4.50	9.90
130 TMP 93	214	8.4	140	5.5	2.0	0.08	585000	131000	2370000	530000	430	1300	10.40	22.88
150 TMP 12	202	8.0	163	6.4	2.0	0.08	375000	84000	1500000	340000	480	1400	6.15	13.53
150 TMP 93	236	9.3	165	6.5	2.0	0.08	635000	143000	2510000	565000	400	1200	12.80	28.16
160 TMP 93	255	10.0	173	6.8	2.5	0.10	745000	167000	3150000	710000	360	1100	16.90	37.18
170 TMP 12	227	8.9	182	7.2	1.5	0.06	485000	109000	1960000	440000	430	1300	8.20	18.04
170 TMP 93	265	10.4	183	7.2	2.5	0.10	800000	180000	3500000	790000	340	1000	17.70	38.94
180 TMP 94	335	13.2	205	8.1	4.0	0.16	1540000	370000	6200000	1390000	240	710	58.20	128.04
190 TMP 12	255	10.0	200	7.9	2.5	0.10	705000	158000	2630000	590000	360	1100	11.80	25.96
190 TMP 93	303	11.9	205	8.1	3.0	0.12	1080000	242000	4500000	1010000	400	900	17.60	38.72
220 TMP 11	262	10.3	227	8.9	1.0	0.04	385000	86500	1860000	415000	480	1500	4.50	9.90
260 TMP 12	342	13.5	276	10.9	2.0	0.08	995000	224000	4350000	980000	280	850	25.20	55.44

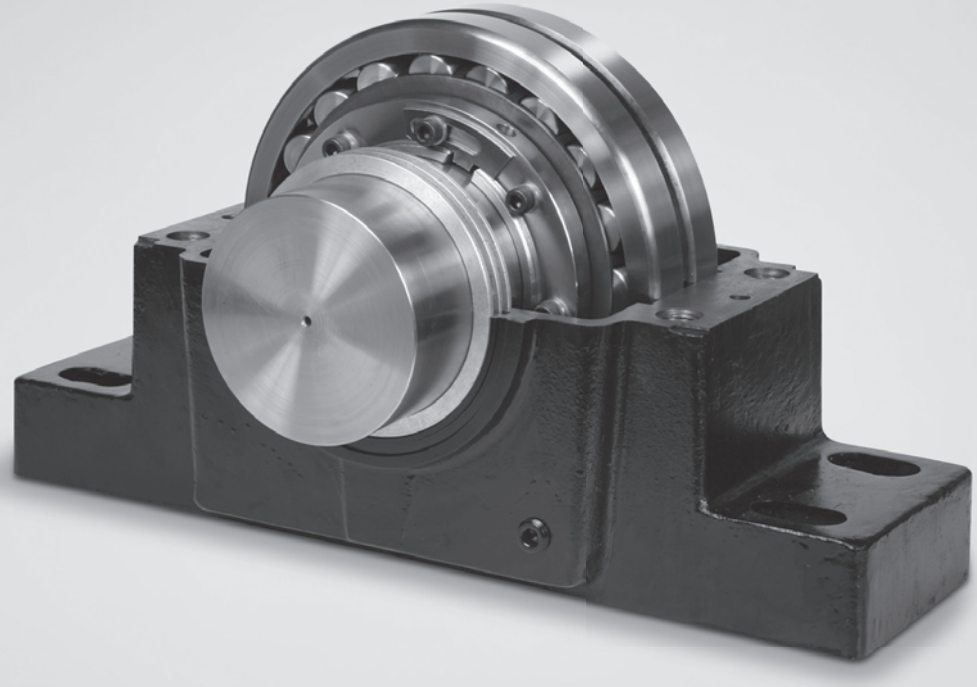

SPLIT PILLOW BLOCKS

Nomenclature G-1

Applications G-2

Accessories G-2

SAF 500 Series G-3

SAF 600 Series G-7

SAF 200 Series G-11

SAF 300 Series G-13

SDAF 500 Series G-17

SDAF 600 Series G-19

SDAF 200 Series G-21

SDAF 300 Series G-23

SAF 000K Series G-25

SDAF 000K Series G-27

Inch Adapter Sleeves G-29

Inch Lock Nuts and Washer G-32

SPLIT PILLOW BLOCKS

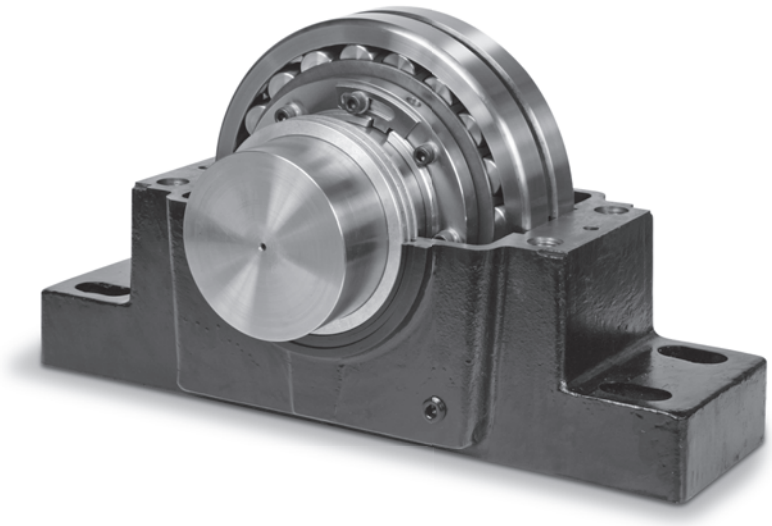

SAF: Two or Four Bolt Pillow Block, Cast Iron
SDAF: Four Bolt Heavy Duty Type Pillow Block, Cast Iron
SAFS: Two or Four Bolt Pillow Block, Cast Steel
FSAF: Four Bolt Pillow Block, Cast Iron (optional)
FSAFS: Four Bolt Pillow Block, Cast Steel (optional)
SDAFS: Four Bolt Heavy Duty Pillow Block, Cast Steel

SAF

22

22: 222xx or 223xx Spherical Roller Bearing
2: 22xx or 23xx Self-Aligning Ball Bearing
1: 12xx or 13xx Double-Row Self-Aligning Ball Bearing

0xx: Housings use Tapered Bore Spherical Roller Bearings with Adapter Sleeves
2xx: Housings use Straight Bore Self-Aligning Ball or Spherical Roller Bearings
3xx: Housings use Straight Bore Self-Aligning Ball or Spherical Roller Bearings
5xx: Housings use Tapered Bore Self-Aligning Ball or Spherical Roller Bearings with Adapter Sleeves
6xx: Housings use Tapered Bore Self-Aligning Ball or Spherical Roller Bearings with Adapter Sleeves

517

K

Indicated on adapter type mounting arrangement for 000 K Series.
Example: SDAF23064K/11-1/2

Shaft size. Only used for Pillow Block units in 000 K Series

11 - 1/2

Please refer to the bearing tables for exact part number options

APPLICATIONS

NSK Pillow Blocks are designed for exceptional performance in a wide range of applications. The pillow blocks are manufactured in a wide variety of sizes out of heavy-duty cast iron. They are also available in ductile and cast steel as an option. NSK pillow blocks are tremendous at keeping water and contaminants away from the bearing while keeping lubrication inside the housing. The housing comes standard with a triple-ring labyrinth seal; but for applications where contamination is a greater concern, taconite seals are available.

NSK Pillow Blocks are completely interchangeable with other manufacturers units.

› **General Industry (Conveyors, Roller Tables, Fans and Blowers)** › **Steel Mills (Runout Tables, Strip Processing Lines)**
› **Processing Industry (Crushers, Hammer Mills, Ball and Rod Mills, Decanters, Kilns)**
› **Paper Making Equipment (Dryer Cans, Jack Ladders, Chip Conveyers, Pumps, Pulpers, Breast Rolls, Press Rolls)**

ACCESSORIES

LER Standard Labyrinth Seal

The LER is a popular standard labyrinth seal for SAF blocks.

LER-DC Dust Cover/Wiper Seal for LER or PER Seals

LER-DC Dust Cover/Wiper Seal can be used with both LER or PER seals. It provides an additional barrier and flinger for contaminants. The housing's machined face provides for an ideal contact for the wiper seal to shroud seal area and create an additional labyrinth. The LER-DC in combination with the PER and PER-PTV seal, provides optimum protection for low speed application in harsh environments.

PER Labyrinth with O-Ring

The PER interchanges completely and includes an O-ring shaft seal for a snug fit on the shaft. The O-ring will cause the PER to generally spin on the shaft.

PER-PTV-Ring Seal for use with PER Labyrinth

PER-PTV-ring is a lip contact seal installed over the PER and within the housing seal grooves. The PTV-ring seal allows the grease to slowly purge creating a barrier for contaminants. The lip contact seal can be reversed to also retain grease for applications where contamination is of less concern or access for re-lube is difficult.

TER Taconite with V-Ring Face Seal

TER-OS Taconite Seal with Oil Seal

The TER taconite seal is available in two versions...one with a V-ring face seal and the other with an oil seal as a shaft contact seal. Both include a felt shaft seal and an O-ring seal for the housing side to provide a tight yet flexible fit.

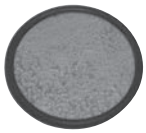

EPR End Cover

The EPR end cover seals one end of the housing.

OLB Seal

The OLB seal is an advanced solution that's uniquely designed to keep water and contaminants out while keeping clean bearing lubrication inside the housing.

PILLOW BLOCK: SAF 500 SERIES

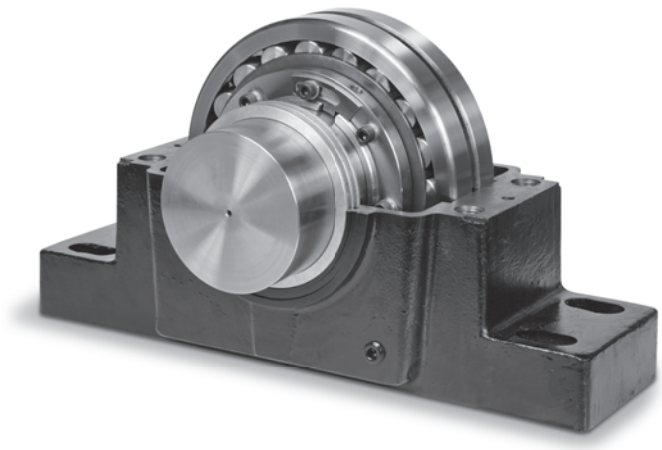

Housing No.	A	B	P	G	E		E_1	H	L	X	Bolts (No. Req'd)	Wt.	D	F	d_1
	In.	In.	In.	In.	Max In.	Min In.	In.	In.	In.	In.	In.	lbs.*	mm	In.	In.
SAF505	1-1/2	6-1/2	1-3/4	11/16	5-1/2	4-5/8	--	2-15/16	2-7/8	--	(2)-1/2	4.0	--	--	3/4
SAF506	1-3/4	7-1/2	2	11/16	6-1/8	5-1/4	--	3-5/16	3-1/4	--	(2)-1/2	6.0	--	--	15/16
SAF507	2	7-1/2	2	7/8	6-1/8	5-5/8		3-7/8	3-1/4	1.000	(2)-1/2	8.0	80	8	1-3/16
SAF509	2-1/4	8-1/4	2-3/8	13/16	7	6-1/4		4-3/8	3-5/8	0.114	(2)-1/2	9.3	85	29	1-7/16
SAF510	2-1/2	8-1/4	2-3/8	15/16	7	6-1/2		4-3/4	3-5/8	0.133	(2)-1/2	10.1	90	30	1-11/16
SAF511	2-3/4	9-5/8	2-3/4	15/16	7-7/8	7-3/8		5-1/4	3-7/8	0.114	(2)-5/8	12.5	100	31	1-15/16
SAF513 FSAF513	3 3	11 11	3-1/8 3-1/8	1 1	9-1/2 9-1/2	8-1/8 8-1/8	2	5-15/16 5-15/16	4-1/2 4-1/2	0.157 0.157	(2)-5/8 (4)-1/2	19.0 19.0	120 120	39 39	2-3/16 2-3/16
SAF515 FSAF515	3-1/4 3-1/4	11-1/4 11-1/4	3-1/8 3-1/8	1-1/8 1-1/8	9-5/8 9-5/8	8-5/8 8-5/8	1-7/8	6-3/8 6-3/8	4-3/4 4-3/4	0.118 0.118	(2)-5/8 (4)-1/2	18.3 18.3	130 130	37 37	2-7/16 2-7/16
SAF516 FSAF516	3-1/2 3-1/2	13 13	3-1/2 3-1/2	1-3/16 1-3/16	11 11	9-5/8 9-5/8	2-1/8	6-7/8 6-7/8	4-7/8 4-7/8	0.187 0.187	(2)-3/4 (4)-5/8	27.3 27.3	140 140	43 43	2-11/16 2-11/16
SAF517 FSAF517	3-3/4 3-3/4	13 13	3-1/2 3-1/2	1-1/4 1-1/4	11 11	9-7/8 9-7/8	2-1/8	7-5/16 7-5/16	5 5	0.187 0.187	(2)-3/4 (4)-5/8	31.8 31.8	150 150	46 46	2-15/16 2-15/16

* Weights are approximate.

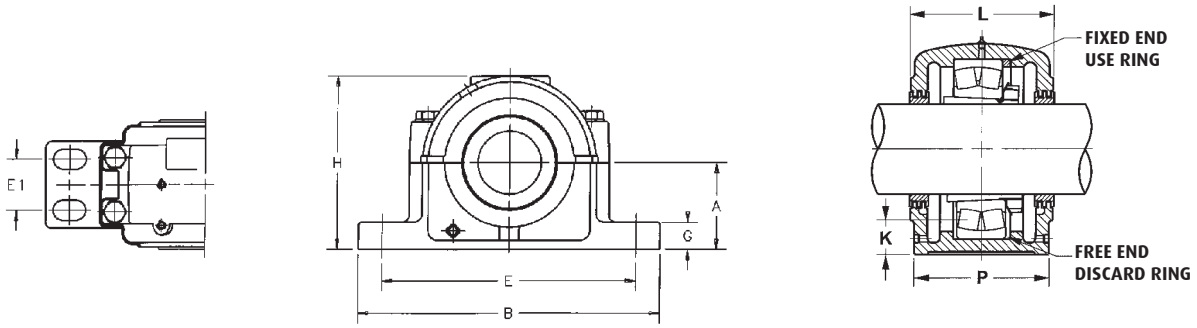

Shaft Size	Complete Unit Number	Housing Only [a]	Bearing Number	Adapters		Labyrinth Seal (2 required)	Taconite Seal (2 required)	OLB Seal (2 required)	Fixing Ring [b]		End Cover [c]
				SNW Type	H Type				Size	Qty.	
3/4	SAF1505 SAF2505	SAF505	1205K 2205K	SNW05 x 3/4 SNW05 x 3/4	H205 x 3/4 H305 x 3/4	LER6	--	OLB6	FR52 x 5 FR52 x 7	2 1	--
15/16	SAF1506 SAF2506	SAF506	1206K 2206K	SNW06 x 15/16 SNW06 x 15/16	H206 x 15/16 H306 x 15/16	LER10	--	OLB10	FR62 x 7 FR62 x 10	2 1	--
1-3/16	SAF1507 SAF2507	SAF507	1207K 2207K	SNW07X1-3/16 SNW07X1-3/16	HA207X1-3/16 HA307X1-3/16	LER14	---	OLB14	FR72X8 FR72X10	2 1	---
1-7/16	SAF1509 SAF2509 SAF22509	SAF509	1209K 2209K 22209K	SNW09X1-7/16 SNW09X1-7/16 SNW09X1-7/16	HA209X1-7/16 HA309X1-7/16 HA309X1-7/16	LER17	TER17	OLB17	FR85X5 FR85X6 FR85X6	2 1 1	EPR03
1-11/16	SAF1510 SAF2510 SAF22510	SAF510	1210K 2210K 22210K	SNW10X1-11/16 SNW10X1-11/16 SNW10X1-11/16	HA210X1-11/16 HA310X1-11/16 HA310X1-11/16	LER20	TER20	OLB20	FR90X5 FR90X7 FR90X7	2 1 1	EPR04
1-15/16	SAF1511 SAF2511 SAF22511	SAF511	1211K 2211K 22211K	SNW11X1-15/16 SNW11X1-15/16 SNW11X1-15/16	HA211X1-15/16 HA311X1-15/16 HA311X1-15/16	LER24	TER24	OLB24	FR100X5 FR100X6 FR100X6	2 1 1	EPR05
2-3/16	SAF1513 SAF2513 SAF22513	SAF513 FSAF513	1213K 2213K 22213K	SNW13X2-3/16 SNW13X2-3/16 SNW13X2-3/16	HA213X2-3/16 HA313X2-3/16 HA313X2-3/16	LER29	TER29	OLB29	FR120X8 FR120X8 FR120X8	2 1 1	EPR06
2-7/16	SAF1515 SAF2515 SAF22515	SAF515 FSAF515	1215K 2215K 22215K	SNW15X2-7/16 SNW15X2-7/16 SNW15X2-7/16	HA215X2-7/16 HA315X2-7/16 HA315X2-7/16	LER37	TER37	OLB37	FR130X6 FR130X6 FR130X6	2 1 1	EPR07
2-11/16	SAF1516 SAF2516 SAF22516	SAF516 FSAF516	1216K 2216K 22216K	SNW16X2-11/16 SNW16X2-11/16 SNW16X2-11/16	HA216X2-11/16 HA316X2-11/16 HA316X2-11/16	LER44	TER44	OLB44	FR140X8.5 FR140X10 FR140X10	2 1 1	EPR08
2-15/16	SAF1517 SAF2517 SAF22517	SAF517 FSAF517	1217K 2217K 22217K	SNW17X2-15/16 SNW17X2-15/16 SNW17X2-15/16	HA217X2-15/16 HA317X2-15/16 HA317X2-15/16	LER53	TER53	OLB53	FR150X9 FR150X10 FR150X10	2 1 1	EPR09

Note: Housings available in cast iron (SAF), Ductile (SAFD) or cast steel (SAFS).
LOR seals with O-rings are also available.

[a] "Housing Only" includes cap, base, capbolts, labyrinth seals and fixing rings.
[b] Fixing Ring is used for fixed block only; do not use for float mounting.
[c] End Cover is optional.

PILLOW BLOCK: SAF 500 SERIES (CONT.)

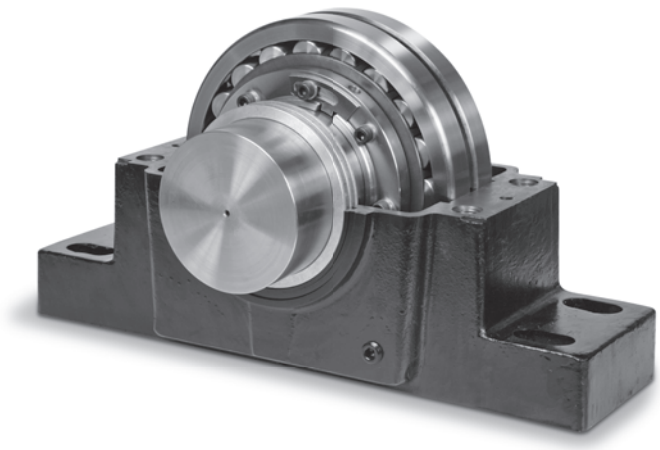

Housing No.	A	B	P	G	E		E_1	H	L	X	Bolts (No. Req'd)	Wt.	D	F	d_1
	In.	In.	In.	In.	Max In.	Min In.	In.	In.	In.	In.	In.	lbs.*	mm	In.	In.
SAF518	4	13-3/4	3-7/8	1-5/16	11-5/8	10-3/8	2-1/8	7-3/4	5-3/4	0.187	(2)-3/4	36.6	160	50	3-3/16
FSAF518	4	13-3/4	3-7/8	1-5/16	11-5/8	10-3/8		7-3/4	5-3/4	0.187	(4)-5/8	36.6	160	50	3-3/16
SAF520	4-1/2	15-1/4	4-3/8	1-3/4	13-1/8	11-5/8	2-3/8	8-3/4	6-1/8	0.187	(2)-7/8	50.3	180	56	3-7/16
FSAF520	4-1/2	15-1/4	4-3/8	1-3/4	13-1/8	11-5/8		8-3/4	6-1/8	0.187	(4)-3/4	50.3	180	56	3-7/16
SAF522	4-15/16	16-1/2	4-3/4	2	14-1/2	12-5/8	2-3/4	9-5/8	6-1/2	0.187	(4)-3/4	69.2	200	63	3-15/16
SAF524	5-1/4	16-1/2	4-3/4	2-1/8	14-1/2	13-1/4	2-3/4	10-1/4	7-3/8	0.187	(4)-3/4	71.2	215	68	4-3/16
SAF526	6	18-3/4	5-1/8	2-3/8	16	14-5/8	3-1/4	11-1/2	8	0.187	(4)-1/2	94.8	230	74	4-7/16
SAF528	6	20-1/8	5-7/8	2-3/8	17-1/8	16	3-3/8	11-3/4	7-5/8	0.187	(4)-1	110.0	250	78	4-15/16
SAF530	6-5/16	21-1/4	6-1/4	2-1/2	18-1/4	17	3-3/4	12-1/2	8-3/8	0.187	(4)-1	138.0	270	83	5-3/16
SAF532	6-11/16	22	6-1/4	2-5/8	19-1/4	17-3/8	3-3/4	13-5/16	8-3/4	0.187	(4)-1	158.0	290	90	5-7/16
SAF534	7-1/16	24-3/4	6-3/4	2-3/4	21-5/8	19-3/8	4-1/4	14-3/16	9-5/8	0.187	(4)-1	185.0	310	96	5-15/16
SAF536	7-1/2	26-3/4	7-1/8	3	23-5/8	20-7/8	4-5/8	14-7/16	10	0.187	(4)-1	217.0	320	96	6-7/16
SAF538	7-7/8	28	7-1/2	3-1/8	24-3/8	21-5/8	4-1/2	15-11/16	10-3/4	0.187	(4)-11/4	285.0	340	102	6-15/16
SAF540	8-1/4	29-1/2	8	3-3/8	25	22-1/2	5	16-1/2	11-1/4	0.187	(4)-11/4	331.0	360	108	7-3/16
SAF544	9-1/2	32-3/4	8-3/4	3-3/4	27-7/8	24-3/4	5-1/4	18-5/8	12	0.187	(4)-11/2	391.0	400	111	7-15/16

* Weights are approximate.

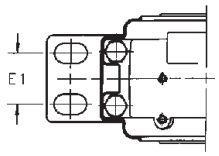

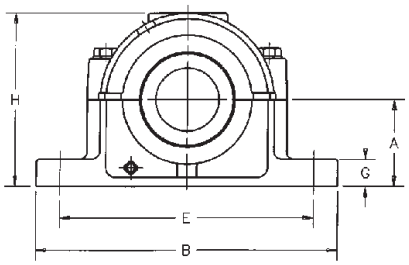

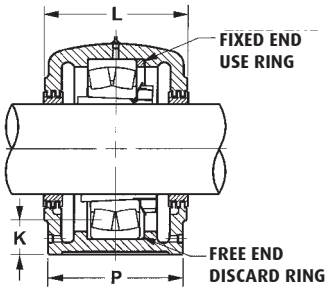

Shaft Size	Complete Unit Number	Housing Only [a]	Bearing Number	Adapters		Labyrinth Seal (2 required)	Taconite Seal (2 required)	OLB Seal (2 required)	Fixing Ring [b]		End Cover [c]
				SNW Type	H Type				Size	Qty.	
3-3/16	SAF1518 SAF2518 SAF22518	SAF518 FSAF518	1218K 2218K 22218K	SNW18X3-3/16 SNW18X3-3/16 SNW18X3-3/16	HA218X3-3/16 HA318X3-3/16 HA318X3-3/16	LER188	TER188	OLB188	FR160X10 FR160X10 FR160X10	2 1 1	EPR11
3-7/16	SAF1520 SAF2520 SAF22520	SAF520 FSAF520	1220K 2220K 22220K	SNW20X3-7/16 SNW20X3-7/16 SNW20X3-7/16	HA220X3-7/16 HA320X3-7/16 HA320X3-7/16	LER102	TER102	OLB102	FR180X11 FR180X10 FR180X10	2 1 1	EPR12
3-15/16	SAF1522 SAF2522 SAF22522	SAF522	1222K 2222K 22222K	SNW22X3-15/16 SNW22X3-15/16 SNW22X3-15/16	HA222X3-15/16 HA322X3-15/16 HA322X3-15/16	LER109	TER109	OLB109	FR200X12.5 FR200X10 FR200X10	2 1 1	EPR13
4-3/16	SAF22524	SAF524	22224K	SNW24X4-3/16	HA3124X4-3/16	LER113	TER113	OLB113	FR215X10	1	EPR14
4-7/16	SAF22526	SAF526	22226K	SNW26X4-7/16	HA3126X4-7/16	LER117	TER117	OLB117	FR230X10	1	EPR15
4-15/16	SAF22528	SAF528	22228K	SNW28X4-15/16	HA3128X4-15/16	LER122	TER122	OLB122	FR250X10	1	EPR27
5-3/16	SAF22530	SAF530	22230K	SNW30X5-3/16	HA3130X5-3/16	LER125	TER125	OLB125	FR270X10	1	EPR16
5-7/16	SAF22532	SAF532	22232K	SNW32X5-7/16	HA3132X5-7/16	LER130	TER130	OLB130	FR290X10	1	EPR16
5-15/16	SAF22534	SAF534	22234K	SNW34X5-15/16	HA3134X5-15/16	LER140	TER140	OLB140	FR310X10	1	EPR18
6-7/16	SAF22536	SAF536	22236K	SNW36X6-7/16	HA3136X6-7/16	LER148	TER148	OLB148	FR320X10	1	EPR19
6-15/16	SAF22538	SAF538	22238K	SNW38X6-15/16	HA3138X6-15/16	LER155	TER155	OLB155	FR340X10	1	EPR20
7-3/16	SAF22540	SAF540	22240K	SNW40X7-3/16	HA3140X7-3/16	LER159	TER159	OLB159	FR360X10	1	EPR20
7-15/16	SAF22544	SAF544	22244K	SNW44X7-15/16	HA3144X7-15/16	LER167	TER167	OLB167	FR400X10	1	EPR20

Note: Housings available in cast iron (SAF), Ductile (SAFD) or cast steel (SAFS).
LOR seals with O-rings are also available.

[a] "Housing Only" includes cap, base, capbolts, labyrinth seals and fixing rings.
[b] Fixing Ring is used for fixed block only; do not use for float mounting.
[c] End Cover is optional.

PILLOW BLOCK: SAF 600 SERIES

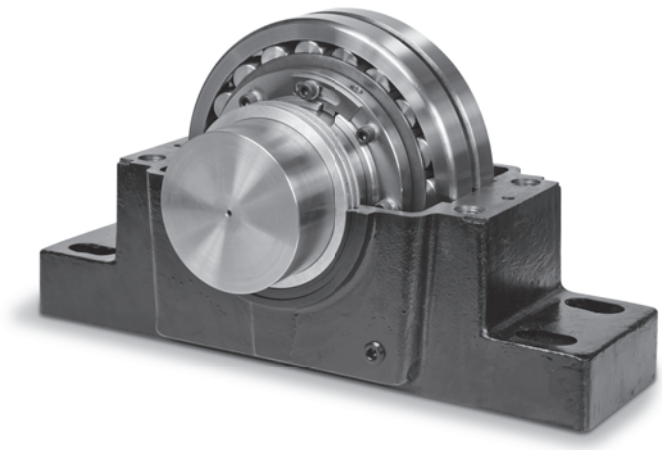

Housing No.	A	B	P	G	E		E_1	H	L	Bolts (No. Req'd)	Wt.	D	F	d_1
	In.	In.	In.	In.	Max In.	Min In.	In.	In.	In.	In.	lbs.*	mm	mm	In.
SAF609	2-3/4	9-5/8	2-3/4	1	7-7/8	7-3/8		5-6/16	4-1/4	(2)-5/8	13.6	100	46	1-7/16
SAF610	3	10-5/8	2-3/4	1-1/8	9	7-3/4		5-13/16	4-5/8	(2)-5/8	17.8	110	51	1-11/16
SAF611 FSAF611	3-1/4 3-1/4	11 11	3-1/3 3-1/3	1-3/16 1-3/16	9-1/2 9-1/2	8-1/8 8-1/8	2	6-3/16 6-3/16	4-7/8 4-7/8	(2)-5/8 (4)-1/2	21.3 21.3	120 120	53 53	1-15/16 1-15/16
SAF613 FSAF613	3-1/2 3-1/2	13 13	3-1/2 3-1/2	1-1/4 1-1/4	11 11	9-5/8 9-5/8	2-1/8	6-15/16 6-15/16	5-3/8 5-3/8	(2)-3/4 (4)-5/8	30.2 30.2	140 140	58 58	2-3/16 2-3/16
SAF615 FSAF615	4 4	13-3/4 13-3/4	3-7/8 3-7/8	1-5/16 1-5/16	11-5/8 11-5/8	10-3/8 10-3/8	2-1/8	7-3/4 7-3/4	6-1/4 6-1/4	(2)-3/4 (4)-5/8	41.3 41.3	160 160	65 65	2-7/16 2-7/16
SAF616 FSAF616	4-1/4 4-1/4	14-1/4 14-1/4	3-7/8 3-7/8	1-5/16 1-5/16	12-5/8 12-5/8	10-5/8 10-5/8	2-1/8	8-1/4 8-1/4	6-1/2 6-1/2	(2)-3/4 (4)-5/8	48.0 48.0	170 170	68 68	2-11/16 2-11/16
SAF617 FSAF617	4-1/2 4-1/2	15-1/4 15-1/4	4-3/8 4-3/8	1-3/4 1-3/4	13-1/8 13-1/8	11-5/8 11-5/8	2-3/8	8-3/4 8-3/4	6-3/4 6-3/4	(2)-7/8 (4)-3/4	71.0 71.0	180 180	70 70	2-15/16 2-15/16
SAF618	4-3/4	15-1/2	4-3/8	2	13-1/2	12	2-1/4	9-3/16	6-7/8	(4)-3/4	76.0	190	74	3-3/16

* Weights are approximate.

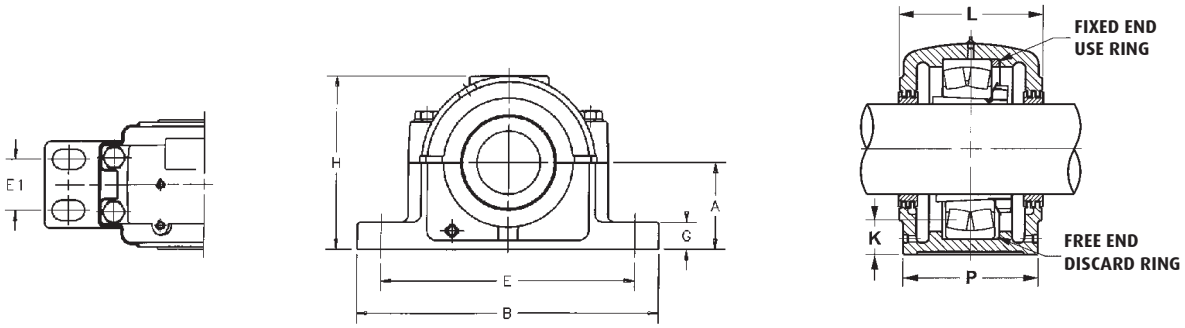

Shaft Size	Complete Unit Number	Housing Only [a]	Bearing Number	Adapters		Labyrinth Seal (2 required)	Taconite Seal (2 required)	OLB Seal (2 required)	Fixing Ring [b]		End Cover [c]
				SNW Type	H Type				Size	Qty.	
1-7/16	SAF1609 SAF2609 SAF21609 SAF22609	SAF609	1309K 2309K 21309K 22309K	SNW09X1-7/16 SNW09X1-7/16 SNW09X1-7/16 SNW109X1-7/16	HA309X1-7/16 HA2309X1-7/16 HA309X1-7/16 HA2309X1-7/16	LER17	TER17	OLB17	FR100X10.5 FR100X10 FR100X10.5 FR100X10	2 1 2 1	EPR03
1-11/16	SAF1610 SAF2610 SAF21610 SAF22610	SAF610	1310K 2310K 21310K 22310K	SNW10X1-11/16 SNW10X1-11/16 SNW10X1-11/16 SNW110X1-11/16	HA310X1-11/16 HA2310X1-11/16 HA310X1-11/16 HA2310X1-11/16	LER20	TER20	OLB20	FR110X11.5 FR110X10 FR110X11.5 FR110X10	2 1 2 1	EPR04
1-15/16	SAF1611 SAF2611 SAF21611 SAF22611	SAF611 FSAF611	1311K 2311K 21311K 22311K	SNW11X1-15/16 SNW11X1-15/16 SNW11X1-15/16 SNW111X1-15/16	HA311X1-15/16 HA2311X1-15/16 HA311X1-15/16 HA2311X1-15/16	LER24	TER24	OLB24	FR120X12 FR120X10 FR120X12 FR120X10	2 1 2 1	EPR05
2-3/16	SAF1613 SAF2613 SAF21613 SAF22613	SAF613 FSAF613	1313K 2313K 21313K 22313K	SNW13X2-3/16 SNW13X2-3/16 SNW13X2-3/16 SNW113X2-3/16	HA313X2-3/16 HA2313X2-3/16 HA313X2-3/16 HA2313X2-3/16	LER32	TER32	OLB32	FR140X12.5 FR140X10 FR140X12.5 FR140X10	2 1 2 1	EPR07
2-7/16	SAF1615 SAF2615 SAF21615 SAF22615	SAF615 FSAF615	1315K 2315K 21315K 22315K	SNW15X2-7/16 SNW15X2-7/16 SNW15X2-7/16 SNW115X2-7/16	HA315X2-7/16 HA2315X2-7/16 HA315X2-7/16 HA2315X2-7/16	LER37	TER37	OLB37	FR160X14 FR160X10 FR160X14 FR160X10	2 1 2 1	EPR07
2-11/16	SAF1616 SAF2616 SAF21616 SAF22616	SAF616 FSAF616	1316K 2316K 21316K 22316K	SNW16X2-11/16 SNW16X2-11/16 SNW16X2-11/16 SNW116X2-11/16	HA316X2-11/16 HA2316X2-11/16 HA316X2-11/16 HA2316X2-11/16	LER44	TER44	OLB44	FR170X14.5 FR170X10 FR170X14.5 FR170X10	2 1 2 1	EPR08
2-15/16	SAF1617 SAF2617 SAF21617 SAF22617	SAF617 FSAF617	1317K 2317K 21317K 22317K	SNW17X2-15/16 SNW17X2-15/16 SNW17X2-15/16 SNW117X2-15/16	HA317X2-15/16 HA2317X2-15/16 HA317X2-15/16 HA2317X2-15/16	LER184	TER184	OLB184	FR180X14.5 FR180X10 FR180X14.5 FR180X10	2 1 2 1	EPR10
3-3/16	SAF1618 SAF2618 SAF21618 SAF22618	SAF618	1318K 2318K 21318K 22318K	SNW18X3-3/16 SNW18X3-3/16 SNW18X3-3/16 SNW118X3-3/16	HA318X3-3/16 HA2318X3-3/16 HA318X3-3/16 HA2318X3-3/16	LER188	TER188	OLB188	FR190X15.5 FR190X10 FR190X15.5 FR190X10	2 1 2 1	EPR11

Note: Housings available in cast iron (SAF), Ductile (SAFD) or cast steel (SAFS).
LOR seals with O-rings are also available.

[a] "Housing Only" includes cap, base, capbolts, labyrinth seals and fixing rings.
[b] Fixing Ring is used for fixed block only; do not use for float mounting.
[c] End Cover is optional.

PILLOW BLOCK: SAF 600 SERIES (CONT.)

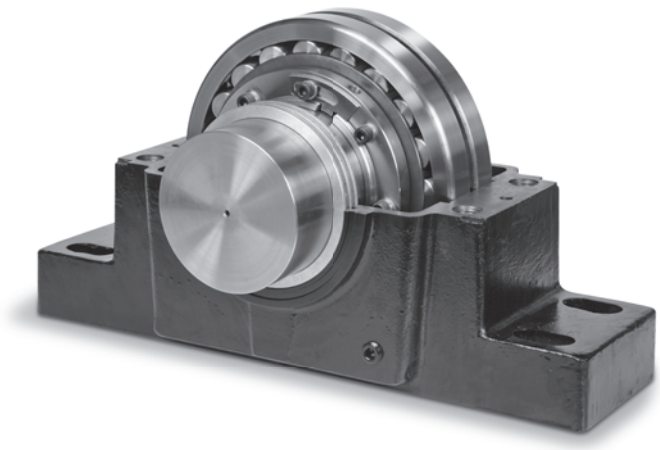

Housing No.	A	B	P	G	E		E_1	H	L	Bolts (No. Req'd)	Wt.	D	F	d_1
	In.	In.	In.	In.	Max In.	Min In.	In.	In.	In.	In.	lbs.*	mm	mm	In.
SAF620	5-1/4	16-1/2	4-3/4	2-1/8	14-1/2	13-1/4	2-3/4	10-1/4	7-3/8	(4)-3/4	98.0	215	83	3-7/16
SAF622	6	18-3/8	5-1/8	2-3/8	16	14-5/8	3	11-1/2	8	(4)-7/8	125.0	240	90	3-15/16
SAF624	6-5/16	21-1/4	6-1/4	2-1/2	18-1/4	17	3-3/4	12-1/2	8-3/8	(4)-1	166.0	260	96	4-3/16
SAF626	6-11/16	22	6-1/4	2-5/8	19-1/4	17-3/8	3-3/4	13-5-16	8-3/4	(4)-1	193.0	280	103	4-7/16
SAF628	7-1/16	24-3/4	6-3/4	2-3/4	21-5/8	19-3/8	4-1/4	14-3/16	9-5/8	(4)-1	244.0	300	112	4-15/16
SAF630	7-1/2	26-3/4	7-1/8	3	23-5/8	20-7/8	4-5/8	14-7/8	9-3/4	(4)-1	271.0	320	116	5-3/16
SAF632	7-7/8	28	7-1/2	3-1/8	24-3/8	21-5/8	4-1/2	15-11/16	10-3/4	(4)-11/4	280.0	340	124	5-7/16
SAF634	8-1/4	29-1/2	8	3-3/8	25	22-1/2	5	16-1/2	11-1/4	(4)-11/4	345.0	360	130	5-15/16
SAF636	8-7/8	31-1/4	8-1/4	3-1/2	26-5/8	24	5-1/4	17-3/4	11-3/8	(4)-11/4	375.0	380	136	6-7/16
SAF638	9-1/2	32-3/4	8-3/4	3-3/4	27-7/8	24-3/4	5-1/4	18-5/8	12	(4)-11/2	480.0	400	142	6-15/16
SAF640	9-7/8	34-1/4	9	4	29-1/2	26-1/4	5-1/2	20	12-1/16	(4)-11/2	500.0	420	148	7-3/16

* Weights are approximate.

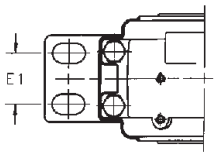

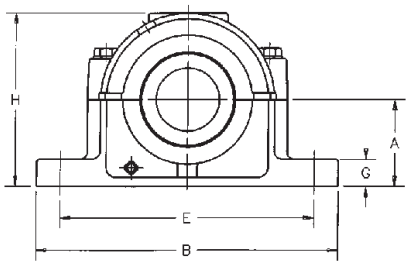

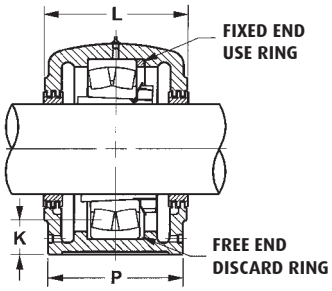

Shaft Size	Complete Unit Number	Housing Only [a]	Bearing Number	Adapters		Labyrinth Seal (2 required)	Taconite Seal (2 required)	OLB Seal (2 required)	Fixing Ring [b]		End Cover [c]
				SNW Type	H Type				Size	Qty.	
3-7/16	SAF1620		1320K	SNW20X3-7/16	HA320X3-7/16	LER102	TER102	OLB102	FR215X18	2	EPR12
	SAF2620	SAF620	2320K	SNW20X3-7/16	HA2320X3-7/16				FR215X10	1	
	SAF21620	SAF622	21320K	SNW20X3-7/16	HA320X3-7/16				FR215X18	2	
	SAF22620		22320K	SNW120X3-7/16	HA2320X3-7/16				FR215X10	1	
3-15/16	SAF1622		1322K	SNW22X3-15/16	HA322X3-15/16	LER109	TER109	OLB109	FR240X20	2	EPR13
	SAF21622		21322K	SNW22X3-15/16	HA322X3-15/16				FR240X20	2	
	SAF22622		22322K	SNW122X3-15/16	HA2322X3-15/16				FR240X10	1	
4-3/16	SAF22624	SAF624	22324K	SNW124X4-3/16	HA2324X4-3/16	LER113	TER113	OLB113	FR260X10	1	EPR14
4-7/16	SAF22626	SAF626	22326K	SNW126X4-7/16	HA2326X4-7/16	LER117	TER117	OLB117	FR280X10	1	EPR15
4-15/16	SAF22628	SAF628	22328K	SNW128X4-15/16	HA2328X4-15/16	LER122	TER122	OLB122	FR300X10	1	EPR27
5-3/16	SAF22630	SAF630	22330K	SNW130X5-3/16	HA2330X5-3/16	LER125	TER125	OLB125	FR320X10	1	EPR16
5-7/16	SAF22632	SAF632	22332K	SNW132X5-7/16	HA2332X5-7/16	LER130	TER130	OLB130	FR340X10	1	EPR16
5-15/16	SAF22634	SAF634	22334K	SNW134X5-15/16	HA2334X5-15/16	LER140	TER140	OLB140	FR360X10	1	EPR18
6-7/16	SAF22636	SAF636	22336K	SNW136X6-7/16	HA2336X6-7/16	LER148	TER148	OLB148	FR380X10	1	EPR19
6-15/16	SAF22638	SAF638	22338K	SNW138X6-15/16	HA2338X6-15/16	LER155	TER155	OLB155	FR400X10	1	EPR20
7-3/16	SAF22640	SAF640	22340K	SNW140X7-3/16	HA2340X7-3/16	LER159	---	OLB159	FR420X10	1	EPR21

Note: Housings available in cast iron (SAF), Ductile (SAFD) or cast steel (SAFS).
LOR seals with O-rings are also available.

[a] "Housing Only" includes cap, base, capbolts, labyrinth seals and fixing rings.
[b] Fixing Ring is used for fixed block only; do not use for float mounting.
[c] End Cover is optional.

PILLOW BLOCK: SAF 200 SERIES

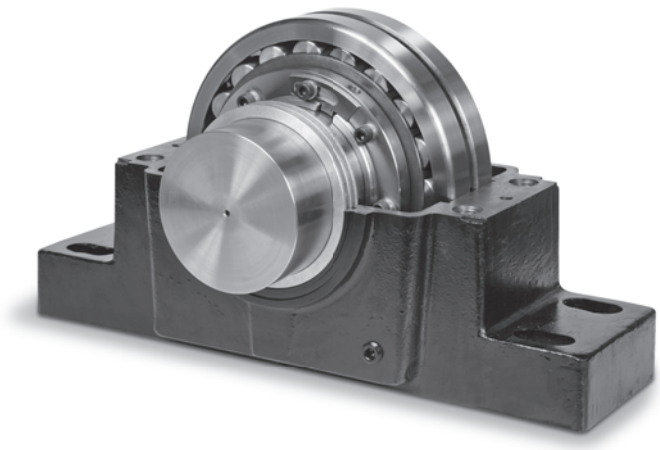

Housing No.	A	B	P	G	E		E_1	H	L	Bolts (No. Req'd)	Wt.	D	F	d_1	d_2
	In.	In.	In.	In.	Max In.	Min In.	In.	In.	In.	In.	lbs.*	mm	mm	In.	In.
SAF216	3-1/2	13	3-1/2	1-1/4	11	9-5/8	2-1/8	6-15/16	5-3/8	(2)-3/4	30	140	43	3-5/8	3
FSAF216	3-1/2	13	3-1/2	1-1/4	11	9-5/8		6-15/16	5-3/8	(4)-5/8	30	140	43	3-5/8	3
SAF217	3-3/4	13	3-1/2	1-1/4	11	9-7/8	2-1/8	7-3/8	5-3/8	(2)-3/4	32	150	46	3-5/16	3-3/16
FSAF217	3-3/4	13	3-1/2	1-1/4	11	9-7/8		7-3/8	5-3/8	(4)-5/8	32	150	46	3-5/16	3-3/16
SAF218	4	13-3/4	3-7/8	1-5/16	11-5/8	10-3/8	2-1/8	7-3/4	5-3/4	(2)-3/4	38	160	50	4-1/8	3-3/8
FSAF218	4	13-3/4	3-7/8	1-5/16	11-5/8	10-3/8		7-3/4	5-3/4	(4)-5/8	38	160	50	4-1/8	3-3/8
SAF220	4-1/2	15-1/4	4-3/8	1-3/4	13-1/8	11-5/8	2-3/8	8-3/4	6	(2)-7/8	60	180	56	4-1/2	3-13/16
FSAF220	4-1/2	15-1/4	4-3/8	1-3/4	13-1/8	11-5/8		8-3/4	6	(4)-3/4	60	180	56	4-1/2	3-13/16
SAF222	4-15/16	16-1/2	4-3/4	2	14-1/2	12-5/8	2-3/4	9-5/8	6-1/2	(4)-3/4	78	200	63	4-7/8	4-3/16
SAF224	5-1/4	16-1/2	4-3/4	2-1/8	14-1/2	13-1/4	2-3/4	10-1/4	7-3/8	(4)-3/4	91	215	68	5-5/16	4-9/16
SAF226	6	18-3/8	5-1/8	2-3/8	16	14-5/8	3-1/4	11-1/2	8	(4)-7/8	125	230	74	5-7/8	4-15/16
SAF228	6	20-1/8	5-7/8	2-3/8	17-1/8	16	3-3/8	11-3/4	7-5/8	(4)-1	129	250	78	6-1/4	5-5/16
SAF230	6-5/16	21-1/4	6-1/4	2-1/2	18-1/4	17	3-3/4	12-1/2	8-3/8	(4)-1	165	270	83	6-5/8	5-3/4
SAF232	6-11/16	22	6-1/4	2-5/8	19-1/4	17-3/8	3-3/4	13-5/16	8-3/4	(4)-1	179	290	90	7	6-1/16
SAF234	7-1/16	24-3/4	6-3/4	2-3/4	21-5/8	19-3/8	4-1/4	14-3/16	9-5/8	(4)-1	228	310	96	7-7/16	6-7/16
SAF236	7-1/2	26-3/4	7-1/8	3	23-5/8	20-7/8	4-5/8	14-7/8	10	(4)-1	258	320	96	7-13/16	6-7/8
SAF238	7-7/8	28	7-1/2	3-1/8	24-3/8	21-5/8	4-1/2	15-11/16	10-3/4	(4)-1	305	340	102	8-3/8	7-1/4
SAF240	8-1/4	29-1/2	8	3-3/8	25	22-1/2	5	16-1/2	11-1/4	(4)-1	361	360	108	8-3/4	7-5/8
SAF244	9-1/2	32-3/4	8-3/4	3-3/4	27-7/8	24-3/4	5-1/4	18-5/8	12	(4)-1	500	400	118	9-9/16	8-5/16

* Weights are approximate.

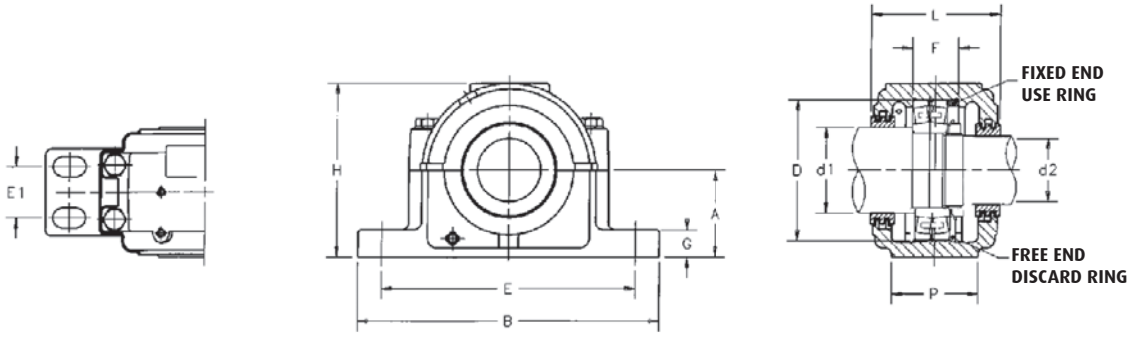

Shaft		Complete Unit Number	Housing Only [a]	Bearing Number	Locknut	Lockwasher	Labyrinth Seal		OLB Seal		Fixing Ring [b]		End [c] Cover
D_1	D_2						D_1 Shaft (1 required)	D_2 Shaft (1 required)	D_1 Shaft (1 required)	D_2 Shaft (1 required)	Size	Qty.	
3-5/8	3	SAF1216 SAF2216 SAF22216	SAF216 FSAF216	1216 2216 22216	AN16	W16	LER82	LER54	OLB82	OLB54	FR140X8.5 FR140X10 FR140X10	2 1 1	EPR09
3-15/16	3/3-16	SAF1217 SAF2217 SAF22217	SAF217 FSAF217	1217 2217 22217	AN17	W17	LER89	LER63	OLB89	OLB63	FR150X9 FR150X10 FR150X10	2 1 1	EPR09
4-1/8	3-3/8	SAF1218 SAF2218 SAF22218	SAF218 FSAF218	1218 2218 22218	AN18	W18	LER112	LER191	OLB112	OLB191	FR160X10 FR160X10 FR160X10	2 1 1	EPR11
4-1/2	3-3/16	SAF1220 SAF2220 SAF22220	SAF220 FSAF220	1220 2220 22220	AN20	W20	LER118	LER106	OLB118	OLB106	FR180X11 FR180X10 FR180X10	2 1 1	EPR12
4-7/8	4-3/16	SAF1222 SAF2222 SAF22222	SAF222	1222 2222 22222	AN22	W22	LER121	LER113	OLB121	OLB113	FR200X12.5 FR200X10 FR200X10	2 1 1	EPR14
5-5/16	4-9/16	SAF22224	SAF224	22224	AN24	W24	LER127	LER119	OLB127	OLB119	FR215X10	1	EPR15
5-7/8	4-15/16	SAF22226	SAF226	22226	AN26	W26	LER136	LER122	OLB136	OLB122	FR230X10	1	EPR27
6-1/4	5-5/16	SAF22228	SAF228	22228	AN28	W28	LER144	LER127	OLB144	OLB127	FR250X10	1	EPR16
6-5/8	5-3/4	SAF22230	SAF230	22230	AN30	W30	LER151	LER134	OLB151	OLB134	FR270X10	1	EPR17
7	6-1/16	SAF22232	SAF232	22232	AN32	W32	LER156	LER142	OLB156	OLB142	FR290X10	1	EPR18
7-7/16	6-7/16	SAF22234	SAF234	22234	AN34	W34	LER161	LER148	OLB161	OLB148	FR310X10	1	EPR19
7-13/16	6-7/8	SAF22236	SAF236	22236	AN36	W36	LER165	LER154	OLB165	OLB154	FR320X10	1	EPR20
8-3/8	7-1/4	SAF22238	SAF238	22238	AN38	W38	LER171	LER160	OLB171	OLB160	FR340X10	1	EPR21
8-3/4	7-5/8	SAF22240	SAF240	22240	AN40	W40	LER175	LER164	OLB175	OLB164	FR360X10	1	EPR22
9-9/16	8-5/16	SAF22244	SAF244	22244	AN44	W44	LER179	LER170	OLB179	OLB170	FR400X10	1	EPR24

Note: Housings available in cast iron (SAF), Ductile (SAFD) or cast steel (SAFS).
Taconite (TER) and LOR seals with O-rings are also available.

[a] "Housing Only" includes cap, base, capbolts, labyrinth seals and fixing rings.
[b] Fixing Ring is used for fixed block only; do not use for float mounting.
[c] End Cover is optional.

PILLOW BLOCK: SAF 300 SERIES

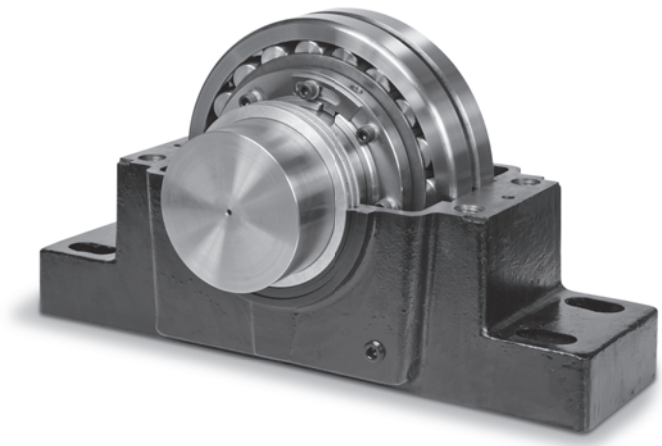

Housing No.	A	B	P	G	E		E_1	H	L	Bolts (No. Req'd)	Wt.	D	F	d_1	d_2
	In.	In.	In.	In.	Max In.	Min In.	In.	In.	In.	In.	lbs.*	mm	mm	In.	In.
SAF308	2-1/2	8-1/4	2-3/8	1	7	6-1/2		4-13/16	4	(2)-1/2	10	90	43	1-15/16	1-7/16
SAF309	2-3/4	9-5/8	2-3/4	1	7-7/8	7-3/8		5-5/16	4-1/4	(2)-5/8	13	100	46	2-1/8	1-11/16
SAF310	3	10-5/8	2-3/4	1-1/8	9	7-3/4		5-13/16	4-5/8	(2)-5/8	17	110	51	2-3/8	1-7/8
SAF311 FSAF311	3-1/4 3-1/4	11 11	3-1/8 3-1/8	1-3/16 1-3/16	9-1/2 9-1/2	8-1/8 8-1/8	2	6-3/16 6-3/16	5 5	(2)-5/8 (4)-1/2	21 21	120 120	53 53	2-9/16 2-9/16	2-1/16 2-1/16
SAF313 FSAF313	3-1/2 3-1/2	13 13	3-1/2 3-1/2	1-1/4 1-1/4	11 11	9-5/8 9-5/8	2-1/8	6-15/16 6-15/16	5-3/8 5-3/8	(2)-3/4 (4)-5/8	30 30	140 140	58 58	3-1/16 3-1/16	2-7/16 2-7/16
SAF314 FSAF314	3-3/4 3-3/4	13 13	3-1/2 3-1/2	1-1/4 1-1/4	11 11	9-7/8 9-7/8	2-1/8	7-3/8 7-3/8	5-3/8 5-3/8	(2)-3/4 (4)-5/8	32 32	150 150	63 63	3-1/4 3-1/4	2-5/8 2-5/8
SAF315 FSAF315	4 4	13-3/4 13-3/4	3-7/8 3-7/8	1-5/16 1-5/16	11-5/8 11-5/8	10-3/8 10-3/8	2-1/8	7-13/16 7-13/16	6-1/4 6-1/4	(2)-3/4 (4)-5/8	41 41	160 160	65 65	3-7/16 3-7/16	2-13/16 2-13/16
SAF316 FSAF316	4-1/4 4-1/4	14-1/4 14-1/4	3-7/8 3-7/8	1-5/16 1-5/16	12-5/8 12-5/8	10-5/8 10-5/8	2-1/8	8-1/4 8-1/4	6-1/2 6-1/2	(2)-3/4 (4)-5/8	49 49	170 170	68 68	3-5/8 3-5/8	3 3
SAF317 FSAF317	4-1/2 4-1/2	15-1/4 15-1/4	4-3/8 4-3/8	1-3/4 1-3/4	13-1/8 13-1/8	11-5/8 11-5/8	2-3/8	8-3/4 8-3/4	6-3/4 6-3/4	(2)-7/8 (4)-3/4	65 65	180 180	70 70	3-15/16 3-15/16	3-3/16 3-3/16

* Weights are approximate

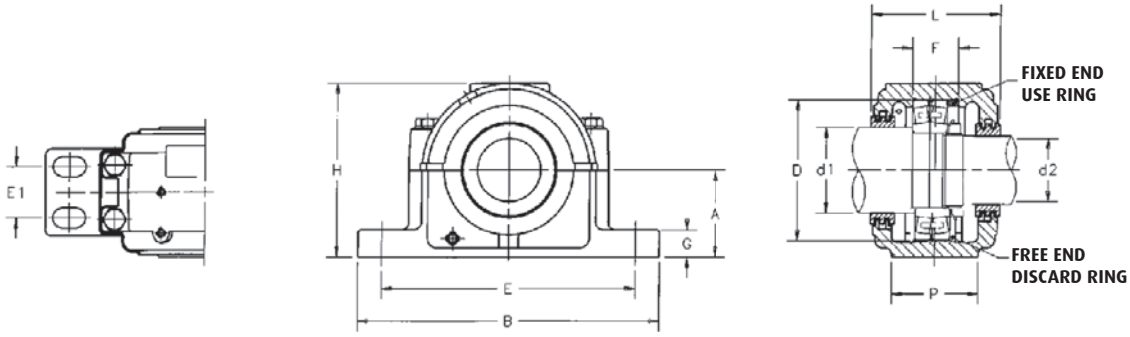

Shaft		Complete Unit Number	Housing Only [a]	Bearing Number	Locknut	Lockwasher	Labyrinth Seal		OLB Seal		Fixing Ring [b]		End [c] Cover
D_1	D_2						D_1 Shaft (1 required)	D_2 Shaft (1 required)	D_1 Shaft (1 required)	D_2 Shaft (1 required)	Size	Qty.	
1-15/16	1-7/16	SAF1308 SAF2308 SAF21308 SAF22308	SAF308	1308 2308 21308 22308	N08	W08	LER24	LER17	OLB24	OLB17	FR90X10 FR90X10 FR90X10.2 FR90X10	2 1 2 1	EPR03
2-1/8	1-11/16	SAF1309 SAF2309 SAF21309 SAF22309	SAF309	1309 2309 21309 22309	N09	W09	LER28	LER20	OLB28	OLB20	FR100X10.5 FR100X10 FR100X10.5 FR100X10	2 1 2 1	EPR04
2-3/8	1-7/8	SAF1310 SAF2310 SAF21310 SAF22310	SAF310	1310 2310 21310 22310	N10	W10	LER35	LER23	OLB35	OLB23	FR110X11.5 FR110X10 FR110X11.5 FR110X10	2 1 2 1	EPR05
2-9/16	2-1/16	SAF1311 SAF2311 SAF21311 SAF22311	SAF311 FSAF311	1311 2311 21311 22311	N11	W11	LER40	LER27	OLB40	OLB27	FR120X12 FR120X10 FR120X12 FR120X10	2 1 2 1	EPR06
3-1/16	2-7/16	SAF1313 SAF2313 SAF21313 SAF22313	SAF313 FSAF313	1313 2313 21313 22313	N13	W13	LER55	LER37	OLB55	OLB37	FR140X12.5 FR140X10 FR140X12.5 FR140X10	2 1 2 1	EPR07
3-1/4	2-5/8	SAF1314 SAF2314 SAF21314 SAF22314	SAF314	1314 2314 21314 22314	N14	W14	LER64	LER43	OLB64	OLB43	FR150X12.5 FR150X10 FR150X12.5 FR150X10	2 1 2 1	---
3-7/16	2-13/16	SAF1315 SAF2315 SAF21315 SAF22315	SAF315 FSAF315	1315 2315 21315 22315	N15	W15	LER79	LER46	OLB79	OLB46	FR160X14 FR160X10 FR160X14 FR160X10	2 1 2 1	EPR08
3-5/8	3	SAF1316 SAF2316 SAF21316 SAF22316	SAF316 FSAF316	1316 2316 21316 22316	AN16	W16	LER84	LER60	OLB84	OLB60	FR170X14.5 FR170X10 FR170X14.5 FR170X10	2 1 2 1	EPR10
3-15/16	3-3/16	SAF1317 SAF2317 SAF21317 SAF22317	SAF317 FSAF317	1317 2317 21317 22317	AN17	W17	LER109	LER188	OLB109	OLB188	FR180X14.5 FR180X10 FR180X14.5 FR180X10	2 1 2 1	EPR11

Note: Housings available in cast iron (SAF), Ductile (SAFD) or cast steel (SAFS).
Taconite (TER) and LOR seals with O-rings are also available.

[a] "Housing Only" includes cap, base, capbolts, labyrinth seals and fixing rings.
[b] Fixing Ring is used for fixed block only; do not use for float mounting.
[c] End Cover is optional.

PILLOW BLOCK: SAF 300 SERIES (CONT.)

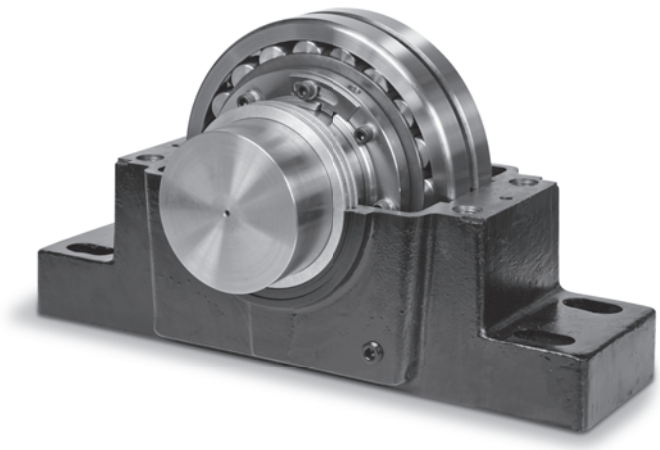

Housing No.	A	B	P	G	E		E_1	H	L	Bolts (No. Req'd)	Wt.	D	F	d_1	d_2
	In.	In.	In.	In.	Max In.	Min In.	In.	In.	In.	In.	lbs.*	mm	mm	In.	In.
SAF318	4-3/4	15-1/2	4-3/8	2	13-1/2	12	2-1/4	9-3/16	6-7/8	(4)-3/4	75	190	74	4-1/8	3-3/8
SAF320	5-1/4	16-1/2	4-3/4	2-1/8	14-1/2	13-1/4	2-3/4	10-1/4	7-3/8	(4)-3/4	91	215	83	4-1/2	3-13/16
SAF322	6	18-3/8	5-1/8	2-3/8	16	14-5/8	3-1/4	11-1/2	8	(4)-7/8	120	240	90	4-7/8	4-3/16
SAF324	6-5/16	21-1/4	6-1/4	2-1/2	18-1/4	17	3-3/4	12-1/2	8-3/8	(4)-1	166	260	96	5-5/16	4-9/16
SAF326	6-11/16	22	6-1/4	2-5/8	19-1/4	17-3/8	3-3/4	13-5/16	8-3/4	(4)-1	184	280	103	5-7/8	4-15/16
SAF328	7-1/16	24-3/4	6-3/4	2-3/4	21-5/8	19-3/8	4-1/4	14-3/16	9-5/8	(4)-1	243	300	112	6-1/4	5-5/16
SAF330	7-1/2	26-3/4	7-1/8	3	23-5/8	20-7/8	4-5/8	14-7/8	9-3/4	(4)-1	259	320	118	6-5/8	5-3/4
SAF332	7-7/8	28	7-1/2	3-1/8	24-3/8	21-5/8	4-1/2	15-11/16	10-3/4	(4)-11/4	299	340	124	7	6-1/16
SAF334	8-1/4	29-1/2	8	3-3/8	25	22-1/2	5	16-1/2	11-1/4	(4)-11/4	355	360	130	7-7/16	6-7/16
SAF336	8-7/8	31-1/4	8-1/4	3-1/2	26-5/8	24	5-1/4	17-3/4	11-3/8	(4)-11/4	360	380	136	7-13/16	6-7/8
SAF338	9-1/2	32-3/4	8-3/4	3-3/4	27-7/8	24-3/4	5-1/4	18-5/8	12	(4)-11/2	477	400	142	8-3/8	7-1/4
SAF340	9-7/8	34-1/4	9	4	29-1/2	26-1/4	5-1/2	20	12-1/16	(4)-11/2	480	420	148	8-3/4	7-5/8

* Weights are approximate.

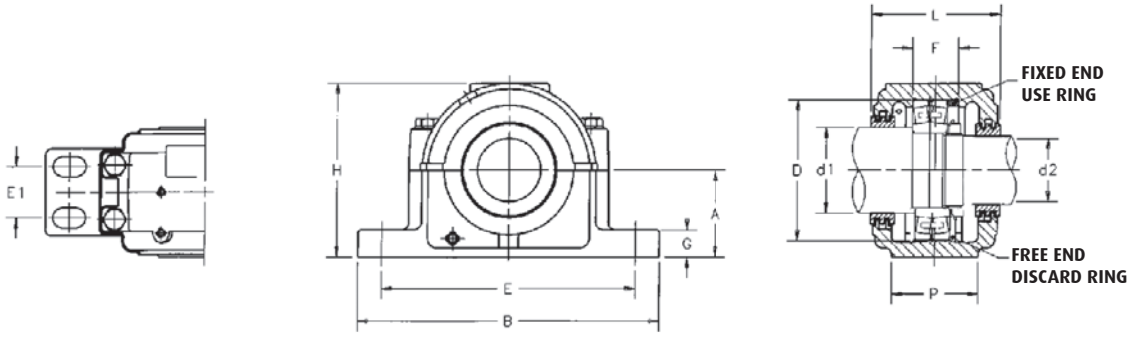

Shaft		Complete Unit Number	Housing Only [a]	Bearing Number	Locknut	Lockwasher	Labyrinth Seal		OLB Seal		Fixing Ring [b]		End [c] Cover
D_1	D_2						D_1 Shaft (1 required)	D_2 Shaft (1 required)	D_1 Shaft (1 required)	D_2 Shaft (1 required)	Size	Qty.	
4-1/8	3-3/8	SAF1318 SAF2318 SAF21318 SAF22318	SAF318 FSAF318	1318 2318 21318 22318	AN18	W18	LER112	LER191	OLB112	OLB191	FR190X15.5 FR190X10 FR190X15.5 FR190X10	2 1 2 1	EPR11
4-1/2	3-13/16	SAF1320 SAF2320 SAF21320 SAF22320	SAF320 FSAF320	1320 2320 21320 22320	AN20	W20	LER118	LER106	OLB118	OLB106	FR215X18 FR215X10 FR215X18 FR215X10	2 1 2 1	EPR12
4-7/8	4-3/16	SAF1322 SAF21322 SAF22322	SAF322	1322 21322 22322	AN22	W22	LER121	LER113	OLB121	OLB113	FR240X20 FR240X20 FR240X10	2 2 1	EPR14
5-5/16	4-9/16	SAF22324	SAF324	22324	AN24	W24	LER127	LER119	OLB127	OLB119	FR260X10	1	EPR15
5-7/8	4-15/16	SAF22326	SAF326	22326	AN26	W26	LER136	LER122	OLB136	OLB122	FR280X10	1	EPR27
6-1/4	5-15/16	SAF22328	SAF328	22328	AN28	W28	LER144	LER127	OLB144	OLB127	FR300X10	1	EPR16
6-5/8	5-3/4	SAF22330	SAF330	22330	AN30	W30	LER151	LER134	OLB151	OLB134	FR320X10	1	EPR17
7	6-1/16	SAF22332	SAF332	22332	AN32	W32	LER156	LER142	OLB156	OLB142	FR340X10	1	EPR18
7-7/16	6-7/16	SAF22334	SAF334	22334	AN34	W34	LER161	LER148	OLB161	OLB148	FR360X10	1	EPR19
7-13/16	6-7/8	SAF22336	SAF336	22336	AN36	W36	LER165	LER154	OLB165	OLB154	FR380X10	1	EPR20
8-3/8	7-1/4	SAF22338	SAF338	22338	AN38	W38	LER171	LER160	OLB171	OLB160	FR400X10	1	EPR21
8-3/4	7-5/8	SAF22340	SAF340	22340	AN40	W40	LER175	LER164	OLB175	OLB164	FR420X10	1	EPR22

Note: Housings available in cast iron (SAF), Ductile (SAFD) or cast steel (SAFS).
Taconite (TER) and LOR seals with O-rings are also available.

[a] "Housing Only" includes cap, base, capbolts, labyrinth seals and fixing rings.
[b] Fixing Ring is used for fixed block only; do not use for float mounting.
[c] End Cover is optional.

PILLOW BLOCK: SDAF 500 SERIES

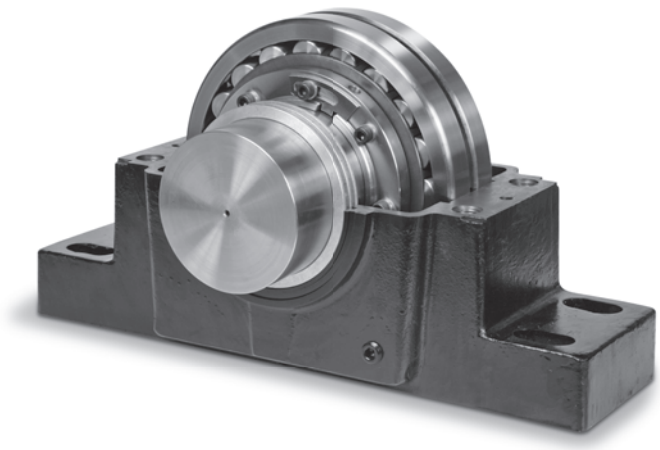

Housing No.	A	B	P	G	E		E_1	H	K Static Oil Level	L	Bolts (No. Req'd)	Wt.
	In.	In.	In.	In.	Max In.	Min In.	In.	In.	In.	In.	In.	lbs.*
SDAF520	4-1/2	15-1/4	6	1-7/8	13-1/8	11-5/8	3-3/8	8-15/16	1-3/4	6-3/4	(4)--3/4	65
SDAF522	4-15/16	16-1/2	6-3/4	2-1/8	14-1/2	12-5/8	4	9-7/8	1-7/8	7-1/4	(4)--7/8	96
SDAF524	5-1/4	16-1/2	6-7/8	2-1/4	14-1/2	13-1/4	4-1/8	10-1/2	1-15/16	7-3/8	(4)--7/8	107
SDAF526	6	18-3/8	7-1/2	2-3/8	16	14-5/8	4-1/2	11-7/8	2-7/16	8	(4)--1	147
SDAF528	6	20-1/8	7-1/2	2-3/8	17-1/8	16	4-1/2	12-1/16	2-1/8	7-15/16	(4)--1-1/8	131
SDAF530	6-5/16	21-1/4	7-7/8	2-1/2	18-1/4	17	4-3/4	12-13/16	2-3/16	8-3/8	(4)--1-1/8	157
SDAF532	6-11/16	22	8-1/4	2-1/2	19-1/4	17-3/8	5	13-11/16	2-3/16	8-3/4	(4)--1-1/8	187
SDAF534	7-1/16	24-3/4	9	2-1/2	21-5/8	19-3/8	5-1/2	14-1/4	2-5/16	9-5/8	(4)--1-1/4	212
SDAF536	7-1/2	26-3/4	9-3/8	2-3/4	23-5/8	20-7/8	5-7/8	15-3/16	2-9/16	10	(4)--1-1/4	292
SDAF538	7-7/8	27-5/8	10	3	23-1/2	21-1/2	6-1/4	16-1/4	2-5/8	10-5/8	(4)--1-3/8	338
SDAF540	8-1/4	28-3/4	10-1/2	3-1/4	25	23	6-3/4	17-1/8	2-11/16	11-1/8	(4)--1-3/8	344
SDAF544	9-1/2	32	11-1/4	3-1/2	27-7/8	25-5/8	7-1/4	19-1/4	3-3/8	11-7/8	(4)--1-1/2	513

* Weights are approximate.

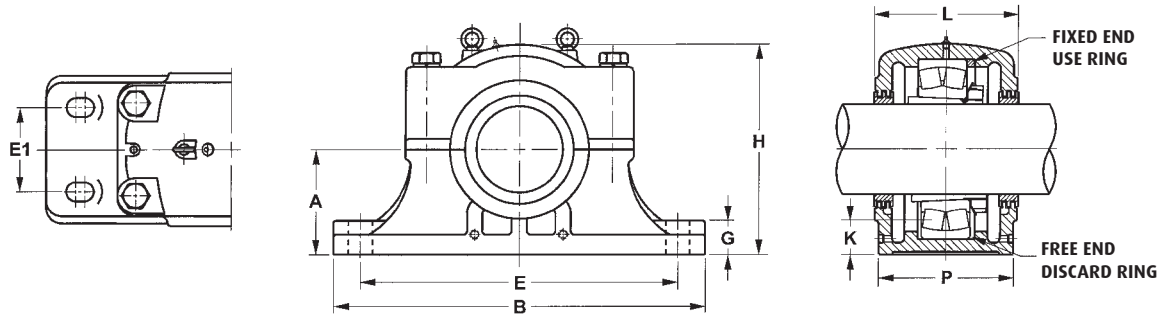

Shaft Diameter S-1 in.	Complete Unit Number	Housing Only [a]	Bearing Number	Adapter Locknut and Lockwasher	Labyrinth Seal (2 required)	OLB Seal (2 required)	Fixing Ring [b]	End Cover [c]
3-7/16	SDAF22520	SDAF520	22220K	SNW20X3-7/16	LER75	OLB75	FR180X10	EPR11
3-15/16	SDAF22522	SDAF522	22222K	SNW22X3-15/16	LER93	OLB93	FR200X10	EPR13
4-3/16	SDAF22524	SDAF524	22224K	SNW24X4-3/16	LER113	OLB113	FR218X10	EPR14
4-7/16	SDAF22526	SDAF526	22226K	SNW26X4-7/16	LER117	OLB117	FR230X10	EPR15
4-15/16	SDAF22528	SDAF528	22228K	SNW28X4-15/16	LER122	OLB122	FR250X10	---
5-3/16	SDAF22530	SDAF530	22230K	SNW30X5-3/16	LER125	OLB125	FR270X10	EPR16
5-7/16	SDAF22532	SDAF532	22232K	SNW32X5-7/16	LER130	OLB130	FR290X10	EPR16
5-15/16	SDAF22534	SDAF534	22234K	SNW34X5-15/16	LER140	OLB140	FR310X10	EPR18
6-7/16	SDAF22536	SDAF536	22236K	SNW36X6-7/16	LER148	OLB148	FR320X10	EPR19
6-15/16	SDAF22538	SDAF538	22238K	SNW38X6-15/16	LER224	OLB224	FR340X10	EPR21
7-3/16	SDAF22540	SDAF540	22240K	SNW40X7-3/16	LER228	OLB228	FR360X10	EPR22
7-15/16	SDAF22544	SDAF544	22244K	SNW44X7-15/16	LER236	OLB236	FR400X10	EPR24

Note: Housings available in cast iron (SAF), Ductile (SAFD) or cast steel (SAFS).
Taconite (TER) and LOR seals with O-rings are also available.

[a] "Housing Only" includes cap, base, capbolts, labyrinth seals and fixing rings.
[b] Fixing Ring is used for fixed block only; do not use for float mounting.
[c] End Cover is optional.

PILLOW BLOCK: SDAF 600 SERIES

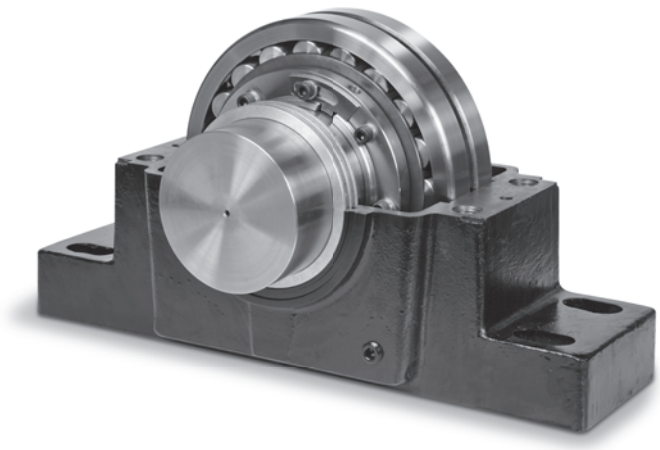

Housing No.	A	B	P	G	E		E_1	H	K Static Oil Level	L	Bolts (No. Req'd)	Wt.
	In.	In.	In.	In.	Max In.	Min In.	In.	In.	In.	In.	In.	lbs.*
SDAF616	4-1/4	14-1/4	5-1/2	1-3/4	12-5/8	10-5/8	3-1/4	8-1/4	1-3/4	6-3/8	(4)--5/8	49
SDAF617	4-1/2	15-1/4	6	1-7/8	13-1/8	11-5/8	3-3/8	8-15/16	1-13/16	6-3/4	(4)--3/4	67
SDAF618	4-3/4	15-1/2	6-1/8	2	13-1/2	12	3-5/8	9-7/16	2	6-7/8	(4)--3/4	72
SDAF620	5-1/4	16-1/2	6-7/8	2-1/4	14-1/2	13-1/4	4-1/8	10-1/2	2-1/8	7-3/8	(4)--7/8	110
SDAF622	6	18-3/8	7-1/2	2-3/8	16	14-5/8	4-1/2	11-7/8	2-1/2	8	(4)--1	147
SDAF624	6-5/16	21-1/4	7-7/8	2-1/2	18-1/4	17	4-3/4	12-13/16	2-9/16	8-3/8	(4)--1-1/8	172
SDAF626	6-11/16	22	8-1/4	2-1/2	19-1/4	17-3/8	5	13-11/16	2-5/8	8-3/4	(4)--1-1/8	194
SDAF628	7-1/16	24-3/4	9	2-1/2	21-5/8	19-3/8	5-1/2	14-1/4	2-11/16	9-3/8	(4)--1-1/4	228
SDAF630	7-1/2	26-3/4	9-3/8	2-3/4	23-5/8	20-7/8	5-7/8	15-3/16	2-7/8	9-3/4	(4)--1-1/4	300
SDAF632	7-7/8	27-5/8	10	3	23-1/2	21-1/2	6-1/4	16-1/4	2-15/16	10-5/8	(4)--1-3/8	355
SDAF634	8-1/4	28-3/4	10-1/2	3-1/4	25	23	6-3/4	17-1/8	3-1/16	11-1/8	(4)--1-3/8	392
SDAF636	8-7/8	30-1/2	10-3/4	3-1/4	26-3/8	24-1/8	6-7/8	17-15/16	3-3/8	11-3/8	(4)--1-1/2	405
SDAF638	9-1/2	32	11-1/4	3-1/2	27-7/8	25-5/8	7-1/2	19-1/4	3-11/16	11-7/8	(4)--1-1/2	484
SDAF640	9-7/8	33-1/2	11-3/4	3-1/2	29-1/4	26-5/8	7-5/8	19-15/16	3-3/4	12-3/8	(4)--1-5/8	564

* Weights are approximate.

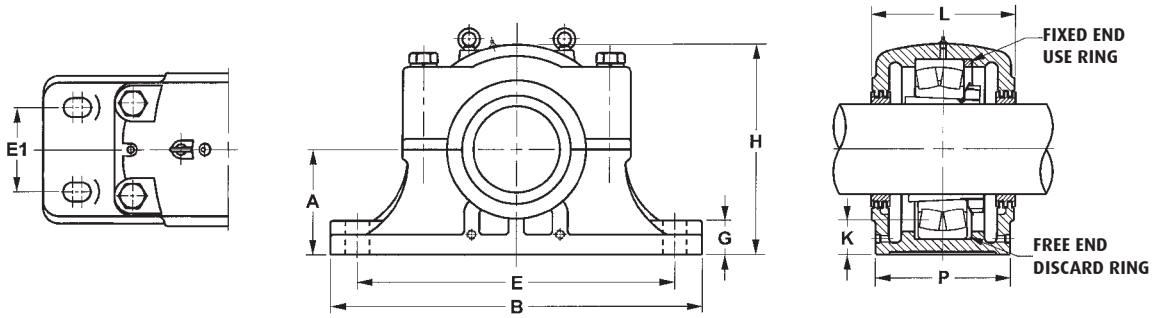

Shaft Diameter S-1 in.	Complete Unit Number	Housing Only [a]	Bearing Number	Adapter Locknut and Lockwasher	Labyrinth Seal (2 required)	OLB Seal (2 required)	Fixing Ring [b]	End Cover [c]
2-11/16	SDAF22616	SDAF616	22316K	SNW116X2-11/16	LER44	OLB44	FR170X10	EPR08
2-15/16	SDAF22617	SDAF617	22317K	SNW117X2-15/16	LER59	OLB59	FR180X10	EPR10
3-3/16	SDAF22618	SDAF618	22318K	SNW118X3-3/16	LER69	OLB69	FR190X10	EPR11
3-7/16	SDAF22620	SDAF620	22320K	SNW120X3-7/16	LER75	OLB75	FR218X10	EPR11
3-15/16	SDAF22622	SDAF622	22322K	SNW122X3-15/16	LER93	OLB93	FR240X10	EPR13
4-3/16	SDAF22624	SDAF624	22324K	SNW124X4-3/16	LER113	OLB113	FR260X10	EPR14
4-7/16	SDAF22626	SDAF626	22326K	SNW126X4-7/16	LER117	OLB117	FR280X10	EPR15
4-15/16	SDAF22628	SDAF628	22328K	SNW128X4-15/16	LER122	OLB122	FR300X10	EPR27
5-3/16	SDAF22630	SDAF630	22330K	SNW130X5-3/16	LER125	OLB125	FR320X10	EPR16
5-7/16	SDAF22632	SDAF632	22332K	SNW132X5-7/16	LER211	OLB211	FR340X10	EPR17
5-15/16	SDAF22634	SDAF634	22334K	SNW134X5-15/16	LER215	OLB215	FR360X10	EPR19
6-7/16	SDAF22636	SDAF636	22336K	SNW136X6-7/16	LER220	OLB220	SR-0-36	EPR26
6-15/16	SDAF22638	SDAF638	22338K	SNW138X6-15/16	LER224	OLB224	FR400X10	EPR21
7-3/16	SDAF22640	SDAF640	22340K	SNW140X7-3/16	LER228	OLB228	FR420X10	EPR22

Note: Housings available in cast iron (SAF), Ductile (SAFD) or cast steel (SAFS).
Taconite (TER) and LOR seals with O-rings are also available.

[a] "Housing Only" includes cap, base, capbolts, labyrinth seals and fixing rings.
[b] Fixing Ring is used for fixed block only; do not use for float mounting.
[c] End Cover is optional.

PILLOW BLOCK: SDAF 200 SERIES

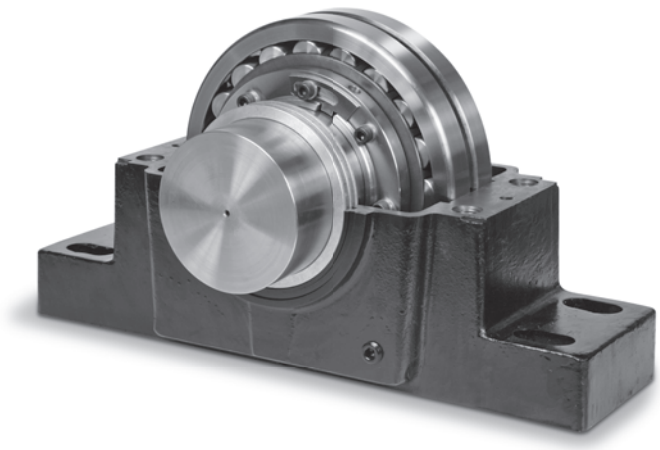

Housing No.	A	B	P	G	E		E_1	H	K Static Oil Level	L	Bolts (No. Req'd)	Wt.
	In.	In.	In.	In.	Max In.	Min In.	In.	In.	In.	In.	In.	lbs.*
SDAF220	4-1/2	15-1/4	6	1-7/8	13-1/8	11-5/8	3-3/8	8-15/16	1-3/4	6-3/4	(4)--3/4	69
SDAF222	4-15/16	16-1/2	6-3/4	2-1/8	14-1/2	12-5/8	4	9-7/8	1-7/8	7-1/4	(4)--7/8	100
SDAF224	5-1/4	16-1/2	6-7/8	2-1/4	14-1/2	13-1/4	4-1/8	10-1/2	1-15/16	7-3/8	(4)--7/8	106
SDAF226	6	18-3/8	7-1/2	2-3/8	16	14-5/8	4-1/2	11-7/8	2-7/16	8	(4)--1	147
SDAF228	6	20-1/8	7-1/2	2-3/8	17-1/8	16	4-1/2	12-1/16	2-1/8	7-15/16	(4)--1	141
SDAF230	6-5/16	21-1/4	7-7/8	2-1/2	18-1/4	17	4-3/4	12-13/16	2-3/16	8-3/8	(4)--1-1/8	157
SDAF232	6-11/16	22	8-1/4	2-1/2	19-1/4	17-3/8	5	13-11/16	2-3/16	8-3/4	(4)--1-1/8	188
SDAF234	7-1/16	24-3/4	9	2-1/2	21-5/8	19-3/8	5-1/2	14-1/4	2-5/16	9-5/8	(4)--1-1/4	212
SDAF236	7-1/2	26-3/4	9-3/8	2-3/4	23-5/8	20-7/8	5-7/8	15-3/16	2-9/16	10	(4)--1-1/4	276
SDAF238	7-7/8	27-5/8	10	3	23-1/2	21-1/2	6-1/4	16-1/4	2-5/8	10-5/8	(4)--1-3/8	338
SDAF240	8-1/4	28-3/4	10-1/2	3-1/4	25	23	6-3/4	17-1/8	2-11/16	11-1/8	(4)--1-3/8	344
SDAF244	9-1/2	32	11-1/4	3-1/2	27-7/8	25-5/8	7-1/4	19-1/4	3-3/8	11-7/8	(4)--1-1/2	520

* Weights are approximate.

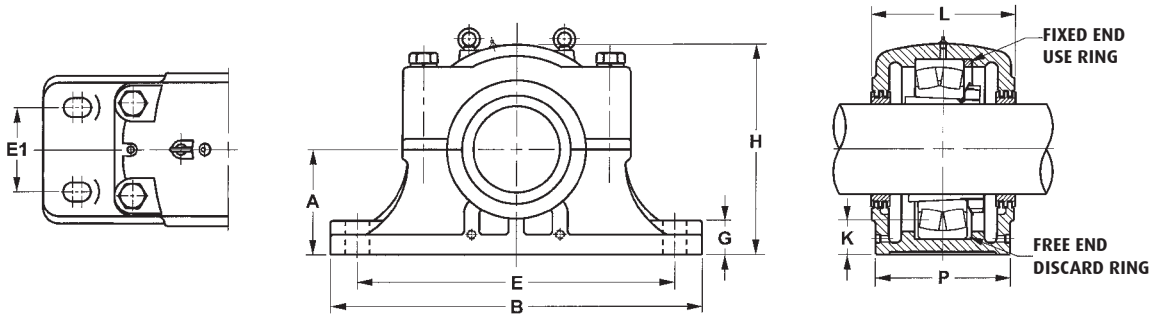

Shaft Diameter		Complete Unit Number	Housing Only [a]	Bearing Number	Locknut	Lockwasher	Labyrinth Seal		OLB Seal		Fixing Ring [b]	End Cover [c]
S-2 in.	S-3 in.						S-2 Shaft (1 required)	S-3 Shaft (1 required)	S-2 Shaft (1 required)	S-3 Shaft (1 required)		
4-1/2	3-13/16	SDAF22220	SDAF220	22220	AN20	W20	LER205	LER87	OLB205	OLB87	FR180X10	EPR12
4-7/8	4-3/16	SDAF22222	SDAF222	22222	AN22	W22	LER121	LER113	OLB121	OLB113	FR200X10	EPR14
5-5/16	4-9/16	SDAF22224	SDAF224	22224	AN24	W24	LER127	LER119	OLB127	OLB119	FR215X10	EPR15
5-7/8	4-15/16	SDAF22226	SDAF226	22226	AN26	W26	LER136	LER122	OLB136	OLB122	FR230X10	EPR27
6-1/4	5-5/16	SDAF22228	SDAF228	22228	AN28	W28	LER144	LER127	OLB144	OLB127	FR250X10	---
6-5/8	5-3/4	SDAF22230	SDAF230	22230	AN30	W30	LER151	LER134	OLB151	OLB134	FR270X10	EPR17
7	6-1/16	SDAF22232	SDAF232	22232	AN32	W32	LER156	LER142	OLB156	OLB142	FR290X10	EPR18
7-7/16	6-7/16	SDAF22234	SDAF234	22234	AN34	W34	LER161	LER148	OLB161	OLB148	FR310X10	EPR19
7-13/16	6-7/8	SDAF22236	SDAF236	22236	AN36	W36	LER165	LER154	OLB165	OLB154	FR320X10	EPR20
8-3/8	7-1/4	SDAF22238	SDAF238	22238	AN38	W38	LER240	LER229	OLB240	OLB229	FR340X10	EPR22
8-3/4	7-5/8	SDAF22240	SDAF240	22240	AN40	W40	LER244	LER233	OLB244	OLB233	FR360X10	EPR23
9-9/16	8-15/16	SDAF22244	SDAF244	22244	AN44	W44	LER248	LER239	OLB248	OLB239	FR400X10	EPR25

Note: Housings available in cast iron (SAF), Ductile (SAFD) or cast steel (SAFS).
Taconite (TER) and LOR seals with O-rings are also available.

[a] "Housing Only" includes cap, base, capbolts, labyrinth seals and fixing rings.
[b] Fixing Ring is used for fixed block only; do not use for float mounting.
[c] End Cover is optional.

PILLOW BLOCK: SDAF 300 SERIES

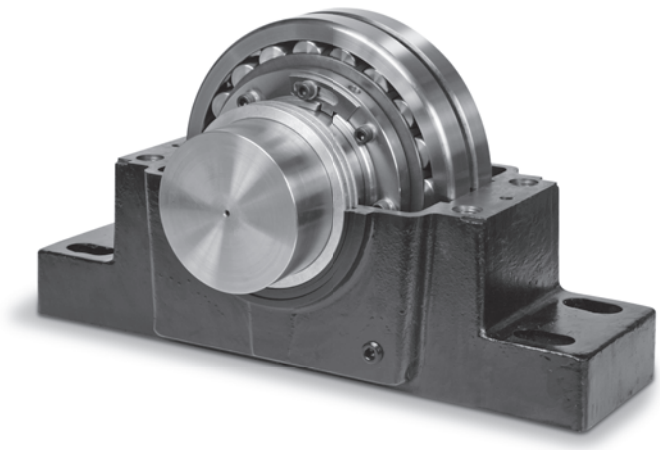

Housing No.	A	B	P	G	E		E_1	H	K Static Oil Level	L	Bolts (No. Req'd)	Wt.
	In.	In.	In.	In.	Max In.	Min In.	In.	In.	In.	In.	In.	lbs.*
SDAF316	4-1/4	14-1/4	5-1/2	1-3/4	12-5/8	10-5/8	3-1/4	8-1/4	1-3/4	6-3/8	(4)--5/8	53
SDAF317	4-1/2	15-1/4	6	1-7/8	13-1/8	11-5/8	3-3/8	8-15/16	1-13/16	6-3/4	(4)--3/4	67
SDAF318	4-3/4	15-1/2	6-1/8	2	13-1/2	12	3-5/8	9-7/16	2	6-7/8	(4)--3/4	72
SDAF320	5-1/4	16-1/2	6-7/8	2-1/4	14-1/2	13-1/4	4-1/8	10-1/2	2-1/8	7-3/8	(4)--7/8	106
SDAF322	6	18-3/8	7-1/2	2-3/8	16	14-5/8	4-1/2	11-7/8	2-1/2	8	(4)--1	149
SDAF324	6-5/16	21-1/4	7-7/8	2-1/2	18-1/4	17	4-3/4	12-13/16	2-9/16	8-3/8	(4)--1-1/8	172
SDAF326	6-11/16	22	8-1/4	2-1/2	19-1/4	17-3/8	5	13-11/16	2-5/8	8-3/4	(4)--1-1/8	195
SDAF328	7-1/16	24-3/4	9	2-1/2	21-5/8	19-3/8	5-1/2	14-1/4	2-11/16	9-3/8	(4)--1-1/4	228
SDAF330	7-1/2	26-3/4	9-3/8	2-3/4	23-5/8	20-7/8	5-7/8	15-3/16	2-7/8	9-3/4	(4)--1-1/4	302
SDAF332	7-7/8	27-5/8	10	3	23-1/2	21-1/2	6-1/4	16-1/4	2-15/16	10-5/8	(4)--1-3/8	355
SDAF334	8-1/4	28-3/4	10-1/2	3-1/4	25	23	6-3/4	17-1/8	3-1/16	11-1/8	(4)--1-3/8	380
SDAF336	8-7/8	30-1/2	10-3/4	3-1/4	26-3/8	24-1/8	6-7/8	17-15/16	3-3/8	11-3/8	(4)--1-1/2	405
SDAF338	9-1/2	32	11-1/4	3-1/2	27-7/8	25-5/8	7-1/4	19-1/4	3-11/16	11-7/8	(4)--1-1/2	522
SDAF340	9-7/8	33-1/2	11-3/4	3-1/2	29-1/4	26-5/8	7-5/8	19-15/16	3-3/4	12-3/8	(4)--1-5/8	564

* Weights are approximate.

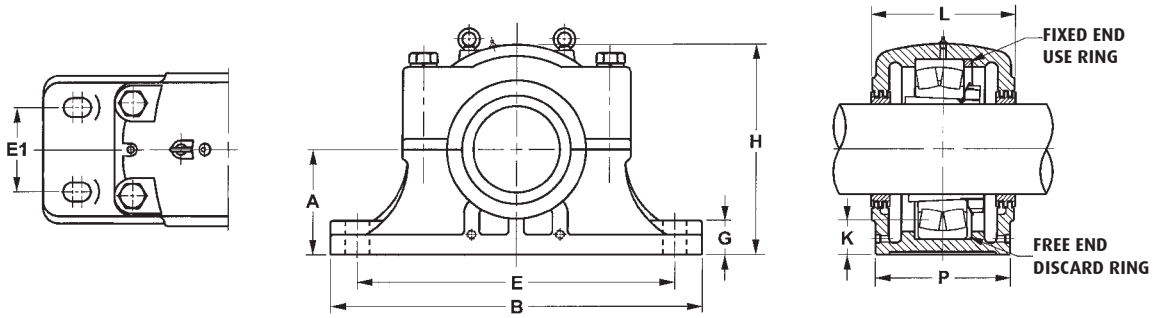

Shaft Diameter		Complete Unit Number	Housing Only [a]	Bearing Number	Locknut	Lockwasher	Labyrinth Seal		OLB Seal		Fixing Ring [b]	End Cover [c]
S-2 in.	S-3 in.						S-2 Shaft (1 required)	S-3 Shaft (1 required)	S-2 Shaft (1 required)	S-3 Shaft (1 required)		
3-5/8	3	SDAF22316	SDAF316	22316	AN16	W16	LER84	LER60	OLB84	OLB60	FR170X10	EPR10
3-15/16	3-3/16	SDAF22317	SDAF317	22317	AN17	W17	LER93	LER69	OLB93	OLB69	FR180X10	EPR11
4-1/8	3-3/8	SDAF22318	SDAF318	22318	AN18	W18	LER96	LER72	OLB96	OLB72	FR190X10	EPR11
4-1/2	3-13/16	SDAF22320	SDAF320	22320	AN20	W20	LER205	LER87	OLB205	OLB87	FR218X10	EPR12
4-7/8	4-3/16	SDAF22322	SDAF322	22322	AN22	W22	LER121	LER113	OLB121	OLB113	FR240X10	EPR14
5-5/16	4-9/16	SDAF22324	SDAF324	22324	AN24	W24	LER127	LER119	OLB127	OLB119	FR260X10	EPR15
5-7/8	4-15/16	SDAF22326	SDAF326	22326	AN26	W26	LER136	LER122	OLB136	OLB122	FR280X10	EPR27
6-1/4	5-5/16	SDAF22328	SDAF328	22328	AN28	W28	LER144	LER127	OLB144	OLB127	FR300X10	EPR16
6-5/8	5-3/4	SDAF22330	SDAF330	22330	AN30	W30	LER151	LER134	OLB151	OLB134	FR320X10	EPR17
7	6-1/16	SDAF22332	SDAF332	22332	AN32	W32	LER225	LER217	OLB225	OLB217	FR340X10	EPR19
7-7/16	6-7/16	SDAF22334	SDAF334	22334	AN34	W34	LER230	LER220	OLB230	OLB220	FR360X10	EPR26
8	6-7/8	SDAF22336	SDAF336	22336	AN36	W36	LER234	LER223	OLB234	OLB223	FR380X10	EPR21
8-3/8	7-1/4	SDAF22338	SDAF338	22338	AN38	W38	LER240	LER229	OLB240	OLB229	FR400X10	EPR22
8-3/4	7-5/8	SDAF22340	SDAF340	22340	AN40	W40	LER244	LER233	OLB244	OLB233	FR420X10	EPR23

Note: Housings available in cast iron (SAF), Ductile (SAFD) or cast steel (SAFS).
Taconite (TER) and LOR seals with O-rings are also available.

[a] "Housing Only" includes cap, base, capbolts, labyrinth seals and fixing rings.
[b] Fixing Ring is used for fixed block only; do not use for float mounting.
[c] End Cover is optional.

PILLOW BLOCK: SAF 000K SERIES

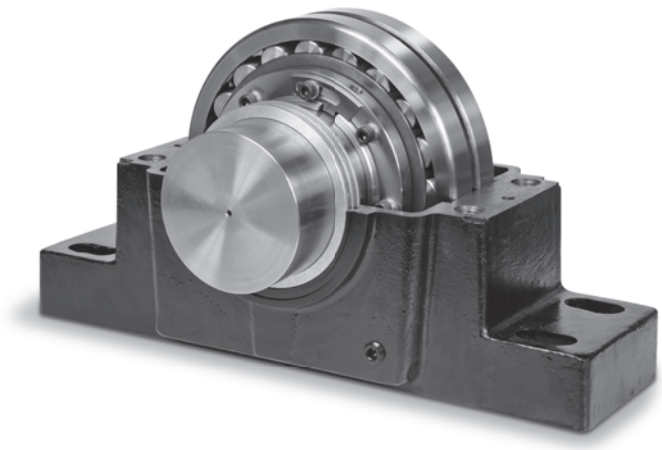

Housing No.	A	B	P	G	E		E_1	H	K Static Oil Level	L	Bolts (No. Req'd)	Wt.
	In.	In.	In.	In.	Max In.	Min In.	In.	In.	In.	In.	In.	lbs.*
SAF 024KX4-3/16	4-1/2	15-1/4	4-3/8	1-3/4	13-1/8	11-5/8	2-3/8	8-3/4	1-3/4	6	(4)--3/4	48
SAF 026KX4-7/16	4-15/16	16-1/2	4-3/4	2	14-1/2	12-5/8	2-3/4	9-5/8	1-7/8	6-1/2	(4)--3/4	56
SAF 028KX4-15/16	5-1/4	16-1/2	4-3/4	2-1/8	14-1/2	13-1/4	2-3/4	10-1/4	1-15/16	7-3/8	(4)--3/4	69
SAF 030KX5-3/16	6	18-3/8	5-1/8	2-3/8	16	14-5/8	3-1/4	11-9/16	2-7/16	8	(4)--7/8	107
SAF 032KX5-7/16	6	18-3/8	5-1/8	2-3/8	16	14-5/8	3-1/4	11-9/16	2-7/16	8	(4)--7/8	125
SAF 034KX5-15/16	6	20-1/8	5-7/8	2-3/8	17-1/8	16	3-3/8	11-3/4	2-1/8	7-5/8	(4)--1	120
SAF 036KX6-7/16	6-11/16	22	6-1/4	2-5/8	19-1/4	17-3/8	3-3/4	13-1/2	2-3/16	8-3/4	(4)--1	172
SAF 038KX6-15/16	6-11/16	22	6-1/4	2-5/8	19-1/4	17-3/8	3-3/4	13-1/2	2-3/16	8-3/4	(4)--1	167
SAF 040KX7-3/16	7-1/16	24-3/4	6-3/4	2-3/4	21-5/8	19-3/8	4-1/4	14-3/8	2-5/16	9-5/8	(4)--1	193
SAF 044KX7-15/16	7-7/8	28	7-1/2	3-1/8	24-3/8	21-5/8	4-1/2	15-7/8	2-5/8	10-5/8	(4)--1-1/4	304
SAF 048KX8-7/16	8-1/4	29-1/2	8	3-3/8	25	22-1/2	5	16-1/2	2-7/32	11-1/4	(4)--1-1/4	270
SAF 048KX8-1/2	8-1/4	29-1/2	8	3-3/8	25	22-1/2	5	16-1/2	2-7/32	11-1/4	(4)--1-1/4	270
SAF 048KX8-15/16	8-1/4	29-1/2	8	3-3/8	25	22-1/2	5	16-1/2	2-7/32	11-1/4	(4)--1-1/4	270
SAF 048KX9	8-1/4	29-1/2	8	3-3/8	25	22-1/2	5	16-1/2	2-7/32	11-1/4	(4)--1-1/4	270
SAF 052KX9-7/16	9-1/2	32-3/4	8-3/4	3-3/4	27-7/8	24-3/4	5-1/4	18-5/8	2-3/4	12	(4)--1-1/2	450
SAF 052KX9-1/2	9-1/2	32-3/4	8-3/4	3-3/4	27-7/8	24-3/4	5-1/4	18-5/8	2-3/4	12	(4)--1-1/2	450
SAF 056KX9-15/16	9-7/8	34-1/4	9	4	29-1/2	26-1/4	5-1/2	20-3/16	2-7/8	12-1/4	(4)--1-1/2	507
SAF 056KX10	9-7/8	34-1/4	9	4	29-1/2	26-1/4	5-1/2	20-3/16	2-7/8	12-1/4	(4)--1-1/2	507
SAF 056KX10-7/16	9-7/8	34-1/4	9	4	29-1/2	26-1/4	5-1/2	20-3/16	2-7/8	12-1/4	(4)--1-1/2	507
SAF 056KX10-1/2	9-7/8	34-1/4	9	4	29-1/2	26-1/4	5-1/2	20-3/16	2-7/8	12-1/4	(4)--1-1/2	507

* Weights are approximate.

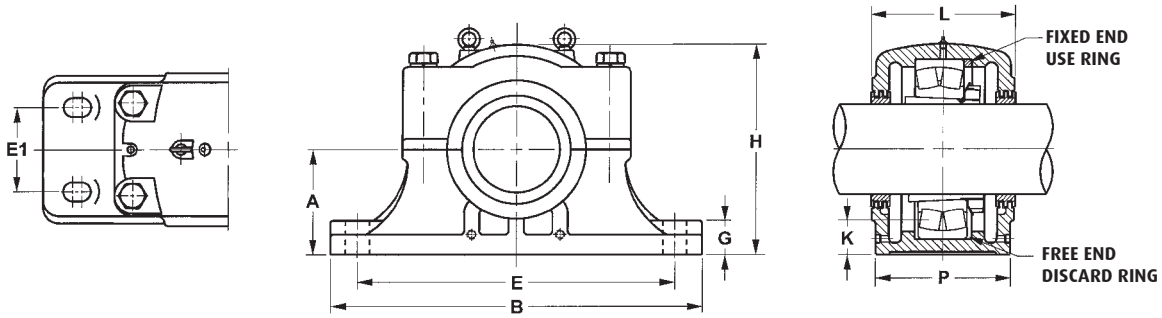

Shaft Diameter S-1 in.	Complete Unit Number	Housing Only [a]	Bearing Number	Adapter Locknut and Lockwasher or Lockplate	Labyrinth Seal (2 required)	Taconite Seal (2 required)	OLB Seal (2 required)	Fixing Ring [b]	End [c] Cover
4-3/16	SAF23024K/4-3/16	SAF024KX4-3/16	23024K	SNW3024X4-3/16	LER113	TER113	OLB113	FR180X10	EPR14
4-7/16	SAF23026K/4-7/16	SAF026KX4-7/16	23026K	SNW3026X4-7/16	LER117	TER117	OLB117	FR200X10	EPR15
4-15/16	SAF23028K/4-15/16	SAF028KX4-15/16	23028K	SNW3028X4-15/16	LER122	TER122	OLB122	SR-0-20	EPR27
5-3/16	SAF23030K/5-3/16	SAF030KX5-3/16	23030K	SNW3030X5-3/16	LER125	TER125	OLB125	SR-0-21	EPR16
5-7/16	SAF23032K/5-7/16	SAF032KX5-7/16	23032K	SNW3032X5-7/16	LER130	TER130	OLB130	FR240X10	EPR16
5-15/16	SAF23034K/5-15/16	SAF034KX5-15/16	23034K	SNW3034X5-15/16	LER140	TER140	OLB140	FR260X10	EPR18
6-7/16	SAF23036K/6-7/16	SAF036KX6-7/16	23036K	SNW3036X6-7/16	LER148	TER148	OLB148	FR280X10	EPR19
6-15/16	SAF23038K6-15/16	SAF038KX6-15/16	23038K	SNW3038X6-15/16	LER155	TER155	OLB155	FR290X10	EPR20
7-3/16	SAF23040K/7-3/16	SAF040KX7-3/16	23040K	SNW3040X7-3/16	LER159	TER159	OLB159	FR310X10	EPR21
7-15/16	SAF23044K/7-15/16	SAF044KX7-15/16	23044K	SNW3044X7-15/16	LER167	TER167	OLB167	FR340X10	EPR23
8-7/16	SAF23048K/8-7/16	SAF048KX8-7/16	23048K	SNP3048X8-7/16	LER550	TER550	OLB550	A8897	---
8-1/2	SAF23048K/8-1/2	SAF048KX8-1/2	23048K	SNP3048X8-1/2	LER551	TER551	OLB551	A8897	---
8-15/16	SAF23048K/8-15/16	SAF048KX8-15/16	23048K	SNP3048X8-15/16	LER552	TER552	OLB552	A8897	---
9	SAF23048K/9	SAF048KX9	23048K	SNP3048X9	LER513	TER513	OLB513	A8897	---
9-7/16	SAF23052K/9-7/16	SAF052KX9-7/16	23052K	SNP3052X9-7/16	LER553	TER553	OLB553	A8898	---
9-1/2	SAF23052K/9-1/2	SAF052KX9-1/2	23052K	SNP3052X9-1/2	LER178	TER178	OLB178	A8898	---
9-15/16	SAF23056K/9-15/16	SAF056KX9-15/16	23056K	SNP3056X9-15/16	ER751	TER751	OLB751	A8819	---
10	SAF23056K/10	SAF056KX10	23056K	SNP3056X10	ER705	TER705	OLB705	A8819	---
10-7/16	SAF23056K/10-7/16	SAF056KX10-7/16	23056K	SNP3056X10-7/16	ER745	TER745	OLB745	A8819	---
10-1/2	SAF23056K/10-1/2	SAF056KX10-1/2	23056K	SNP3056X10-1/2	ER710	TER710	OLB710	A8819	---

Note: Housings available in cast iron (SAF), Ductile (SAFD) or cast steel (SAFS).
Taconite (TER) and LOR seals with O-rings are also available.

[a] "Housing Only" includes cap, base, capbolts, labyrinth seals and fixing rings.
[b] Fixing Ring is used for fixed block only; do not use for float mounting.
[c] End Cover is optional.

PILLOW BLOCK: SDAF 000K SERIES

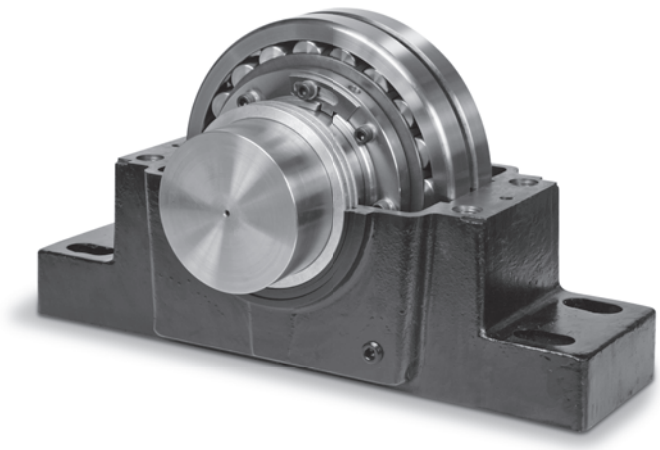

Housing No.	A	B	P	G	E		E_1	H	K Static Oil Level	L	Bolts (No. Req'd)	Wt.
	In.	In.	In.	In.	Max In.	Min In.	In.	In.	In.	In.	In.	lbs.*
SDAF060K/10-15/16	12	38-1/4	14-3/4	3-3/8	33-1/2	32-3/4	9	23-7/16	4-3/8	14-1/2	(4)--1-5/8	875
SDAF060K/11	12	38-1/4	14-3/4	3-3/8	33-1/2	32-3/4	9	23-7/16	4-3/8	14-1/2	(4)--1-5/8	875
SDAF064K/11-7/16	12	38-1/4	14-3/4	3-3/8	33-1/2	32-3/4	9	23-7/16	4	15-1/2	(4)--1-5/8	878
SDAF064K/11-1/2	12	38-1/4	14-3/4	3-3/8	33-1/2	32-3/4	9	23-7/16	4	15-1/2	(4)--1-5/8	878
SDAF064K/11-15/16	12	38-1/4	14-3/4	3-3/8	33-1/2	32-3/4	9	23-7/16	4	15-1/2	(4)--1-5/8	878
SDAF064K/12	12	38-1/4	14-3/4	3-3/8	33-1/2	32-3/4	9	23-7/16	4	15-1/2	(4)--1-5/8	878
SDAF068K/12-7/16	12	39	15-1/4	4-3/16	33-1/2	32	10	24	3-3/8	15-3/4	(4)--1-7/8	1100
SDAF068K/12-1/2	12	39	15-1/4	4-3/16	33-1/2	32	10	24	3-3/8	15-3/4	(4)--1-7/8	1100
SDAF072K/12-15/16	12-13/16	41-3/4	15-3/4	4-1/2	36-1/2	35	10-1/2	25-3/4	3-23/32	16-1/4	(4)--1-7/8	1170
SDAF072K/13	12-13/16	41-3/4	15-3/4	4-1/2	36-1/2	35	10-1/2	25-3/4	3-23/32	16-1/4	(4)--1-7/8	1170
SDAF072K/13-7/16	12-13/16	41-3/4	15-3/4	4-1/2	36-1/2	35	10-1/2	25-3/4	3-23/32	16-1/4	(4)--1-7/8	1170
SDAF072K/13-1/2	12-13/16	41-3/4	15-3/4	4-1/2	36-1/2	35	10-1/2	25-3/4	3-23/32	16-1/4	(4)--1-7/8	1170
SDAF076K/13-15/16	12-13/16	41-3/4	15-3/4	4-1/2	36-1/2	35	10-1/2	25-3/4	3-3/8	16-1/4	(4)--1-7/8	1146
SDAF076K/14	12-13/16	41-3/4	15-3/4	4-1/2	36-1/2	35	10-1/2	25-3/4	3-3/8	16-1/4	(4)--1-7/8	1146

* Weights are approximate.

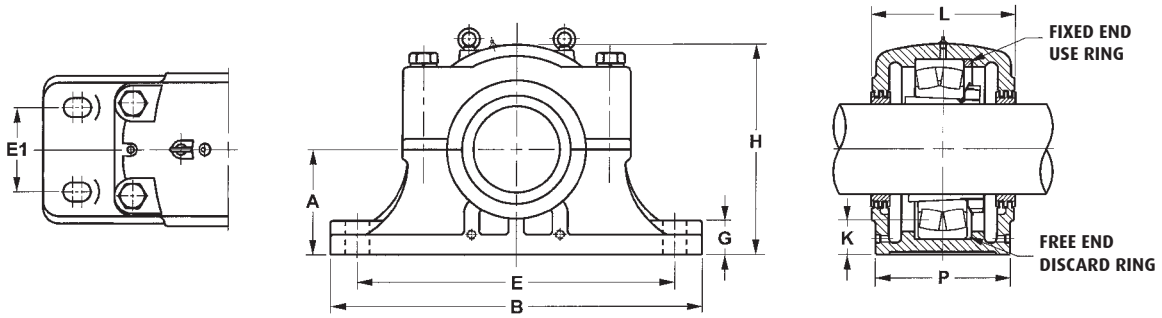

Shaft Diameter S-1 in	Complete Unit Number	Housing Only [a]	Bearing Number	Adapter Locknut and Lockwasher or Lockplate	Labyrinth Seal (2 required)	OLB Seal (2 required)	Fixing Ring [b]
10-15/16	SDAF23060K/10-15/16	SDAF060K/10-15/16	23060K	SNP3060X10-15/16	ER858	OLB858	A8967
11	SDAF23060K/11	SDAF060K/11	23060K	SNP3060X11	ER825	OLB825	A8967
11-7/16	SDAF23064K/11-7/16	SDAF064K/11-7/16	23064K	SNP3064X11-7/16	ER861	OLB861	A8968
11-1/2	SDAF23064K/11-1/2	SDAF064K/11-1/2	23064K	SNP3064X11-1/2	ER832	OLB832	A8968
11-15/16	SDAF23064K/11-15/16	SDAF064K/11-15/16	23064K	SNP3064X11-15/16	ER859	OLB859	A8968
12	SDAF23064K/12	SDAF064K/12	23064K	SNP3064X12	ER818	OLB818	A8968
12-7/16	SDAF23068K/12-7/16	SDAF068K/12-7/16	23068K	SNP3068X12-7/16	ER865	OLB865	A8969
12-1/2	SDAF23068K/12-1/2	SDAF068K/12-1/2	23068K	SNP3068X12-1/2	ER866	OLB866	A8969
12-15/16	SDAF23072K/12-15/16	SDAF072K/12-15/16	23072K	SNP3072X12-15/16	ER869	OLB869	A8970
13	SDAF23072K/13	SDAF072K/13	23072K	SNP3072X13	ER846	OLB846	A8970
13-7/16	SDAF23072K/13-7/16	SDAF072K/13-7/16	23072K	SNP3072X13-7/16	ER872	OLB872	A8970
13-1/2	SDAF23072K/13-1/2	SDAF072K/13-1/2	23072K	SNP3072X13-1/2	ER823	OLB823	A8970
13-15/16	SDAF23076K/13-15/16	SDAF076K/13-15/16	23076K	SNP3076X13-15/16	ER875	OLB875	A8971
14	SDAF23076K/14	SDAF076K/14	23076K	SNP3076X14	ER876	OLB876	A8971

Note: Housings available in cast iron (SAF), Ductile (SAFD) or cast steel (SAFS).
Taconite (TER) and LOR seals with O-rings are also available.

[a] "Housing Only" includes cap, base, capbolts, labyrinth seals and fixing rings.
[b] Fixing Ring is used for fixed block only; do not use for float mounting.

INCH ADAPTER SLEEVES: FOR 222 SERIES BEARINGS

WITH NUT AND WASHER (ALSO USED WITH 12, 13, AND 22 SERIES)

Part No. (Bore)	Weight lbs.	Dimension in Inches				Lock Nut	Lock Washer
		d_1	I	D	c		
SNW05X3/4	0.2	3/4	1.27	1.6	0.46	N05	W05
SNW05X11/16	0.3	11/16	1.27	1.6	0.46	N05	W05
SNW06X15/16	0.2	15/16	1.35	1.8	0.46	N06	W06
SNW06X1	0.2	1	1.35	1.8	0.46	N06	W06
SNW07X1-1/16	0.4	1/1-16	1.46	2.1	0.48	N07	W07
SNW07X1-1/4	0.3	1/1-4	1.46	2.1	0.48	N07	W07
SNW07X1-1/8	0.3	1-1/8	1.46	2.1	0.48	N07	W07
SNW07X1-3/16	0.3	1-3/16	1.46	2.1	0.48	N07	W07
SNW08X1-1/4	0.4	1-1/4	1.50	2.3	0.50	N08	W08
SNW08X1-3/8	0.4	1-3/8	1.50	2.3	0.50	N08	W08
SNW08X1-5/16	0.4	1-15/16	1.50	2.3	0.50	N08	W08
SNW09X1-3/8	0.6	1-3/8	1.58	2.5	0.50	N09	W09
SNW09X1-1/2	0.6	1-1/2	1.58	2.5	0.50	N09	W09
SNW09X1-7/16	0.6	1-7/16	1.58	2.5	0.50	N09	W09
SNW10X1-11/16	0.7	1-11/16	1.77	2.7	0.56	N10	W10
SNW10X1-3/4	0.7	1-3/4	1.77	2.7	0.56	N10	W10
SNW10X1-5/8	0.7	1-5/8	1.77	2.7	0.56	N10	W10
SNW11X1-13/16	0.8	1-13/16	1.85	3.0	0.56	N11	W11
SNW11X1-3/4	0.8	1-3/4	1.85	3.0	0.56	N11	W11
SNW11X1-7/8	0.8	1-7/8	1.85	3.0	0.56	N11	W11
SNW11X1-15/16	0.9	1-15/16	1.85	3.0	0.56	N11	W11
SNW11X2	0.9	2	1.85	3.0	0.56	N11	W11
SNW13X2	1.0	2	2.10	3.4	0.63	N13	W13
SNW13X2-1/4	1.4	2-1/4	2.10	3.4	0.63	N13	W13
SNW13X2-3/16	1.4	2-3/16	2.10	3.4	0.63	N13	W13
SNW13X2-5/16	1.3	2-5/16	2.10	3.4	0.63	N13	W13
SNW15X2-1/2	2.3	2-1/2	2.30	3.9	0.67	AN15	W15
SNW15X2-3/8	2.4	2-3/8	2.30	3.9	0.67	AN15	W15
SNW15X2-5/8	2.2	2-5/8	2.30	3.9	0.67	AN15	W15
SNW15X2-7/16	2.2	2-7/16	2.30	3.9	0.67	AN15	W15
SNW16X2-11/16	2.4	2-11/16	2.38	4.2	0.67	AN16	W16
SNW16X2-3/4	2.4	2-3/4	2.38	4.2	0.67	AN16	W16
SNW17X2-15/16	2.9	2-15/16	2.49	4.4	0.70	AN17	W17
SNW17X3	2.9	3	2.49	4.4	0.70	AN17	W17
SNW18X3-1/4	4.0	3-1/4	2.49	4.7	0.78	AN18	W18
SNW18X3	4.0	3	2.65	4.7	0.78	AN18	W18
SNW20X3-1/2	4.0	3-1/2	2.87	5.2	0.84	AN20	W20
SNW20X3-7/16	4.0	3-7/16	2.87	5.2	0.84	AN20	W20
SNW22X3-11/16	4.9	3-11/16	3.21	5.7	0.91	AN22	W22
SNW22X3-15/16	4.8	3-15/16	3.21	5.7	0.91	AN22	W22
SNW22X4	4.8	4	3.21	5.7	0.91	AN22	W22
SNW24X4-1/4	6.2	4-1/4	3.47	6.1	0.94	AN24	W22
SNW24X4-3/16	6.2	4-3/16	3.47	6.1	0.94	AN24	W24
SNW26X4-7/16	9.7	4-7/16	3.76	6.8	1.00	AN26	W26
SNW26X4-1/2	9.7	4-1/2	3.76	6.8	1.00	AN26	W26
SNW28X4-15/16	10.5	4-15/16	3.98	7.1	1.06	AN28	W28
SNW28X4-7/8	10.5	4-7/8	3.98	7.1	1.06	AN28	W28
SNW28X5	10.5	5	3.98	7.1	1.06	AN28	W28
SNW30X5-1/4	16.0	5-1/4	4.24	7.7	1.13	AN30	W30
SNW30X5-3/16	16.0	5-3/16	4.24	7.7	1.13	AN30	W30
SNW32X5-1/2	16.0	5-1/2	4.58	8.1	1.19	AN32	W32
NW32X5-7/16	16.0	5-7/16	4.58	8.1	1.19	AN32	W32
SNW32X5-3/4	16.0	5-3/4	4.58	8.1	1.19	AN32	W32
SNW34X5-15/16	19.5	5-15/16	4.85	8.7	1.22	AN34	W34
SNW34X6	19.5	6	4.85	8.7	1.22	AN34	W34
SNW36X6-7/16	20.5	6-7/16	5.04	9.1	1.25	AN36	W36
SNW36X6-1/2	20.5	6-1/2	5.04	9.1	1.25	AN36	W36
SNW38X6-15/16	23.5	6-15/16	5.26	9.5	1.28	AN38	W38
SNW38X7	23.5	7	5.26	9.5	1.28	AN38	W38
SNW40X7-3/16	30.5	7-3/16	5.48	9.8	1.34	AN40	W40
SNW40X7-3/8	30.5	7-3/8	5.48	9.8	1.34	AN40	W40
SNW44X7-1/2	32.5	7-1/2	5.90	11.0	1.41	AN44	W44
SNW44X7-7/8	32.5	7-7/8	5.90	11.0	1.41	AN44	W44
SNW44X7-15/16	32.5	7-15/16	5.90	11.0	1.41	AN44	W44
SNW44X8	32.5	8	5.90	11.0	1.41	AN44	W44

INCH ADAPTER SLEEVES: FOR 223 AND 232 SERIES BEARINGS

WITH NUT AND WASHER

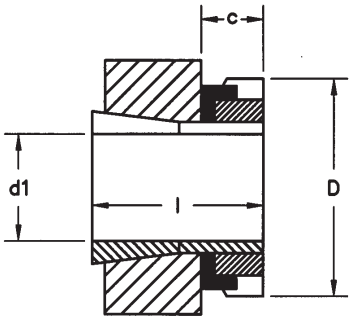

Part No. (Bore)	Weight lbs.	Dimension in Inches				Lock Nut	Lock Washer
		d_1	l	D	c		
SNW109X1-7/16	0.7	1-7/16	2.13	2.53	0.50	N09	W09
SNW109X1-1/2	0.7	1-1/2	2.13	2.53	0.50	N09	W09
SNW110X1-11/16	0.9	1-11/16	2.39	2.69	0.56	N10	W10
SNW110X1-3/4	0.9	1-3/4	2.39	2.69	0.56	N10	W10
SNW111X1-7/8	0.9	1-7/8	2.52	2.97	0.56	N11	W11
SNW111X1-15/16	0.9	1-15/16	2.52	2.97	0.56	N11	W11
SNW111X2	0.9	2	2.52	2.97	0.56	N11	W11
SNW113X2-1/4	1.8	2-1/4	2.77	3.38	0.63	N13	W13
SNW113X2-3/16	1.8	2-3/16	2.77	3.38	0.63	N13	W13
SNW115X2-3/8	3.0	2-3/8	3.08	3.88	0.70	AN15	W15
SNW115X2-7/16	3.0	2-7/16	3.08	3.88	0.70	AN15	W15
SNW115X2-1/2	3.0	2-1/2	3.08	3.88	0.70	AN15	W15
SNW116X2-11/16	3.2	2-11/16	3.20	4.16	0.67	AN16	W16
SNW116X2-3/4	3.2	2-3/4	3.20	4.16	0.67	AN16	W16
SNW117X2-15/16	3.4	2-15/16	3.31	4.41	0.70	AN17	W17
SNW117X3	3.4	3	3.31	4.41	0.70	AN17	W17
SNW118X3.3/16	4.0	3-3/16	3.55	4.66	0.78	AN18	W18
SNW118X3-1/4	4.0	3-1/4	3.55	4.66	0.78	AN18	W18
SNW120X3-7/16	6.3	3-7/16	3.97	5.19	0.84	AN20	W20
SNW120X3-1/2	6.3	3-1/2	3.97	5.19	0.84	AN20	W20
SNW122X3-11/16	6.5	3-11/16	4.35	5.72	0.91	AN22	W22
SNW122X3-15/16	6.5	3-15/16	4.35	5.72	0.91	AN22	W22
SNW122X4	6.5	4	4.35	5.72	0.91	AN22	W22
SNW124X4-3/16	7.8	4-3/16	4.65	6.13	0.94	AN24	W24
SNW124X4-1/4	7.8	4-1/4	4.65	6.13	0.94	AN24	W24
SNW126X4-7/16	12.5	4-7/16	4.98	6.75	1.00	AN26	W26
SNW126X4-1/2	12.5	4-1/2	4.98	6.75	1.00	AN26	W26
SNW128X4-15/16	13.0	4-15/16	5.32	7.09	1.06	AN28	W28
SNW128X5	13.0	5	5.32	7.09	1.06	AN28	W28
SNW130X5-3/16	18.0	5-3/16	5.62	7.69	1.13	AN30	W30
SNW130X5-1/4	18.0	5-1/4	5.62	7.69	1.13	AN30	W30
SNW132X5-7/16	18.0	5-7/16	5.92	8.06	1.19	AN32	W32
SNW134X5-15/16	21.0	5-15/16	6.19	8.66	1.22	AN34	W34
SNW134X6	21.0	6	6.19	8.66	1.22	AN34	W34
SNW136X6-7/16	20.5	6-7/16	6.46	9.06	1.25	AN36	W36
SNW136X6-1/2	20.5	6-1/2	6.46	9.06	1.25	AN36	W36
SNW138X6-15/16	28.0	6-15/16	6.76	9.47	1.28	AN38	W38
SNW138X7	28.0	7	6.76	9.47	1.28	AN38	W38
SNW140X7-3/16	35.5	7-3/16	7.10	9.84	1.34	AN40	W40
SNW144X7-15/16	46.5	7-15/16	7.29	11.00	1.41	N44	W44
SNW144X8	46.5	8	7.29	11.00	1.41	N44	W44

INCH ADAPTER SLEEVES: FOR 230 SERIES BEARINGS

WITH NUT AND WASHER

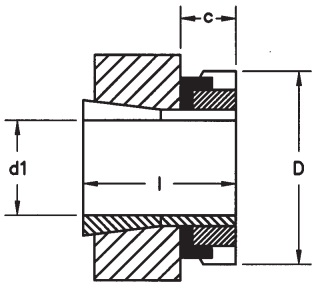

Part No. (Bore)	Weight lbs.	Dimension in Inches				Lock Nut	Lock Washer
		d_1	l	D	c		
SNW3024X4-3/16	6.2	4-3/16	2.95	5.69	0.94	AN24	W24
SNW3026X4-7/16	7.5	4-7/16	3.24	6.13	1.00	AN26	W26
SNW3026X4-1/2	7.5	4-1/2	3.24	6.13	1.00	AN26	W26
SNW3028X4-15/16	8.5	4-15/16	3.34	6.50	1.06	AN28	W28
SNW3028X5	8.5	5	3.34	6.50	1.06	AN28	W28
SNW3030X5-3/16	9.8	5-3/16	3.49	7.13	1.13	AN30	W30
SNW3030X5-1/4	9.8	5-1/4	3.49	7.13	1.13	AN30	W30
SNW3032X5-7/16	12.0	5-7/16	3.71	7.50	1.19	AN32	W32
SNW3034X5-15/16	13.5	5-15/16	4.02	7.88	1.22	AN34	W34
SNW3034X6	13.5	6	4.02	7.88	1.22	AN34	W34
SNW3036X6-7/16	15.0	6-7/16	4.34	8.25	1.25	AN36	W36
SNW3036X6-1/2	15.0	6-1/2	4.34	8.25	1.25	AN36	W36
SNW3038X6-15/16	17.0	6-15/16	4.41	8.69	1.28	AN38	W38
SNW3038X7	17.0	7	4.41	8.69	1.28	AN38	W38
SNW3040X7-3/16	19.5	7-3/16	4.75	9.44	1.34	AN40	W40
SNW3044X7-15/16	24.5	7-15/16	5.13	10.25	1.38	N44	W44
SNW3044X8	24.5	8	5.13	10.25	1.38	N44	W44
SNP3048X8-7/16	31.0	8-7/16	5.43	11.44	1.70	N048	P48
SNP3048X8-1/2	31.0	8-1/2	5.43	11.44	1.70	N048	P48
SNP3048X8-15/16	32.0	8-15/16	5.43	11.44	1.70	N048	P48
SNP3048X9	32.0	9	5.43	11.44	1.70	N048	P48
SNP3052X9-7/16	41.0	9-7/16	6.02	12.19	1.77	N052	P52
SNP3052X9-1/2	40.0	9-1/2	6.02	12.19	1.77	N052	P52
SNP3056X9-15/16	47.0	9-15/16	6.19	13.00	1.86	N056	P56
SNP3056X10	46.0	10	6.19	13.00	1.86	N056	P56
SNP3056X10-7/16	45.0	10-7/16	6.19	13.00	1.86	N056	P56
SNP3056X10-1/2	45.0	10-1/2	6.19	13.00	1.86	N056	P56
SNP3060X10-15/16	59.0	10-15/16	6.73	14.19	1.97	N060	P60
SNP3060X11	59.0	11	6.73	14.19	1.97	N060	P60
SNP3064X11-1/2	66.0	11-1/2	6.95	15.00	2.06	N064	P64
SNP3064X12	66.0	12	6.95	15.00	2.06	N064	P64
SNP3068X12-7/16	78.0	12-7/16	7.54	15.75	2.19	N068	P68
SNP3068X12-1/2	78.0	12-1/2	7.54	15.75	2.19	N068	P68
SNP3072X13-7/16	86.0	13-7/16	7.58	16.50	2.19	N072	P72
SNP3076X13-15/16	95.0	13-15/16	7.74	17.75	2.41	N076	P76
SNP3076X14	95.0	14	7.74	17.75	2.41	N076	P76
SNP3080X15	100.0	15	8.41	18.50	2.56	N080	P80
SNP3084X15-3/4	105.0	15-3/4	8.50	19.31	2.56	N084	P84
SNP3088X16	143.0	16	8.98	20.47	2.36	N088	P88
SNP3088X16-1/2	143.0	16-1/2	8.98	20.47	2.36	N088	P88
SNP3092X17	153.0	17	9.21	21.26	2.36	N092	P92
SNP3096X18	161.0	18	9.33	22.05	2.36	N096	P96
SNP3500X18-1/2	180.0	18-1/2	9.72	22.83	2.68	N500	P500

INCH LOCK NUTS AND WASHER

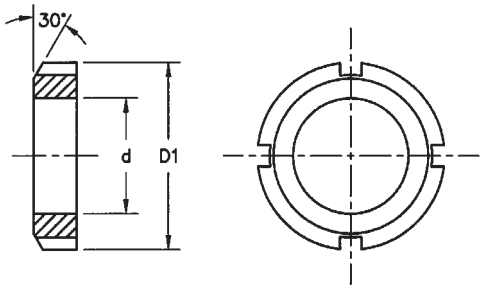

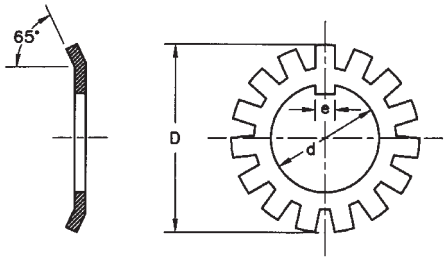

Inch Lock Nuts

Part No.	Thread per inch	d in.	D_1 in.
N00	32	0.39	0.76
N01	32	0.47	0.88
N02	32	0.59	1.01
N03	32	0.66	1.13
N04	32	0.78	1.38
N05	32	0.97	1.57
N06	18	1.17	1.76
N07	18	1.38	2.07
N08	18	1.56	2.26
N09	18	1.77	2.54
N10	18	1.97	2.69
N11	18	2.16	2.97
N12	18	2.36	3.16
N13	18	2.55	3.38
N14	18	2.75	3.63
AN15	12	2.93	3.88
AN16	12	3.14	4.16
AN17	12	3.34	4.41
AN18	12	3.53	4.66
AN19	12	3.73	4.94
AN20	12	3.92	5.19
AN21	12	4.12	5.44
AN22	12	4.33	5.72
AN24	12	4.72	6.13
AN26	12	5.11	6.76
AN28	12	5.50	7.10
AN30	12	5.89	7.69
AN32	8	6.28	8.07
AN34	8	6.66	8.66
AN36	8	7.07	9.07
AN38	8	7.47	9.47
AN40	8	7.85	9.85
AN44	8	8.63	11.01

Inch Lock Washers

Part No.	d in.	D_1 in.	e in.
W00	0.40	0.88	0.12
W01	0.48	1.02	0.12
W02	0.60	1.16	0.12
W03	0.68	1.33	0.12
W04	0.80	1.53	0.18
W05	0.99	1.72	0.18
W06	1.19	1.92	0.18
W07	1.40	2.25	0.18
W08	1.58	2.47	0.29
W09	1.79	2.73	0.29
W10	1.99	2.92	0.29
W11	2.18	3.11	0.29
W12	2.40	3.34	0.29
W13	2.59	3.58	0.29
W14	2.79	3.83	0.29
W15	2.97	4.11	0.29
W16	3.18	4.38	0.35
W17	3.40	4.63	0.35
W18	3.58	4.94	0.35
W19	3.80	5.22	0.35
W20	3.99	5.50	0.35
W21	4.19	5.70	0.35
W22	4.40	6.06	0.35
W24	4.80	6.47	0.35
W26	5.19	7.03	0.44
W28	5.58	7.44	0.59
W30	5.98	8.06	0.59
W32	6.39	8.44	0.59
W34	6.76	9.06	0.72
W36	7.17	9.44	0.72
W38	7.58	9.88	0.72
W40	7.98	10.31	0.84
W44	8.70	11.44	0.94

NSK
NSK

SUPER PRECISION BEARINGS

SUPER PRECISION ANGULAR CONTACT BALL BEARINGS

Nomenclature H-1
Interchange H-2
Applications H-2
7000C Series H-3
7000A5 Series H-5
7200C Series H-7
7200A5 Series H-9
7900C Series H-11
7900A5 Series H-13

HIGH SPEED SUPER PRECISION ANGULAR CONTACT BALL BEARINGS

Nomenclature H-15
Interchange H-16
Applications H-16
Recommended Grease Quantities H-18
BER Series H-19
BNR Series H-27
BSR Series H-35

SUPER PRECISION ANGULAR CONTACT THRUST BALL BEARINGS

Nomenclature H-39
Interchange H-40
Applications H-40
BAR Series H-41
BTR Series H-43

SUPER PRECISION CYLINDRICAL ROLLER BEARINGS

Nomenclature H-45
Interchange H-46
Applications H-46
N1000 Series H-47
NN3000 Series H-49
NN3900 Series H-51

BALL SCREW SUPPORT BEARINGS

TAC Series

Nomenclature H-53
Interchange H-54
Applications H-54
Major Dimensions H-55
Load Ratings H-56
Preloads H-57

BSBD Series

BSN Type H-59
BSF Type H-60
BSN-DT Series H-61
BSN-DF Series H-62

PRECISION DEEP GROOVE BALL BEARINGS

Nomenclature H-63
Interchange H-63
Applications H-63
60 & 62 Series H-64
63 Series H-65

SUPER PRECISION ANGULAR CONTACT BALL BEARINGS

Series
7000
7200
7900

Contact Angle
C: 15°
A5: 25°

Cage Symbols
TR: Phenolic
TYN: Polyamide

Preload Symbols
L: Light
M: Medium
H: Heavy

70 **16** **C** **SN24** **TR** **DU** **L** **P4Y**

Bore Size
(04 and up: multiply last two numbers by 5 to get bore in mm)
00: 10 mm **04:** 20 mm
01: 12 mm **05:** 25 mm
02: 15 mm **12:** 60 mm
03: 17 mm **20:** 100 mm

Ball Material
Blank: Steel Ball
SN24: Ceramic Ball

Combination Symbols
DU: Duplex Universal
SU: Single Universal

Precision Class:
P4: ISO Class 4 (ABEC7)
P4Y*: NSK Exclusive P4 Accuracy
P3: Dimensions - ISO Class 4
Running Accuracy : ISO Class 2
P2: ISO Class 2 (ABEC9)

*P4Y indicates special ID/OD tighter tolerance for ease of matching sets.

Please refer to the bearing tables for exact part number options

INTERCHANGE

	Description	Interchange								
		NSK	*OLD NSK	SKF	FAG	BARDEN	OLD BARDEN	FAF/TIMKEN	SNFA	NTN
Part No.	Ultra Light Series	79XX	79XX	719XX	719XX	19XX	-	93XXWI	EB/ESP	79XX
	Extra Light Series	70XX	70XX	70XX	70XX	1XX	1XX	91XXWI	EX/ESX	70XX
	Light Series	72XX	72XX	72XX	72XX	2XX	2XX	2XXWI	E2/ES2	72XX
Part Number Suffix	15° Contact Angle	C	C	CD	C	C	BLANK	2**	1	C
	25° Contact Angle	A5	A5	ACD	E	E	2**	3**	3	AD
	Polyamide Cage	TYN	TY	-	-	TMT	-	PRC	P	T2
	Phenolic Cage	TR	T	BLANK	T	T, TA	BLANK	CR	C	T1
	Seals	V1V	-	S**	2RSD OR S**	RR	VV, PP	-	/S	-
	Duplex Universal	DU	DU	DG	DU	DU	D	DU	DU	GD2
	Single Universal	SU	SU	G	U	U	-	SU	U	G
	Extra Light Preload	EL	EL	-	-	-	-	X	-	GL
	Light Preload	L	L	A	L	L	L	L	L	GN
	Medium Preload	M	M	B	M	M	M	M	M	GM
	Heavy Preload	H	H	C	H	H	H	H	H	-
	Ceramic Balls	SN24	SN24	HC	HCB**	C**	-	C**	/NS	5S**
	ABEC 7 Precision	P4Y	P4	P4A	P4S	BLANK	BLANK	MM/MMV**	7	P4
	ABEC 9 Precision	P2	P2	PA9A, P9	-	ABEC 9	ABEC 9	MMX**	9	P2

*TYN cage replaces TY, TR cage replaces T. Sealed (V1V) versions are a new option and P4Y tolerance specification replaces P4. P4Y tolerance specification has tighter bore and OD control than ABEC 7 (class 4 or P4). NSK supplies the following bearing series with P4Y tolerance: 7000; 7200.

**Indicates prefix not suffix.

The competitive manufacturers are provided for a convenient source of unit substitution. They can be considered interchangeable in most instances, but for special applications, please contact NSK. NSK assumes no liability with respect to errors or omissions.

APPLICATIONS

Super Precision Angular Contact ball bearings are specifically designed for rigid, high-speed, high-precision machine tool spindles. Their state-of-the-art preload control assures consistent high performance. Super Precision Angular contacts are also available with seals – contact NSK for details.

› **Lathes** › **Boring Machinery** › **Grinders** › **Machining Centers** › **Milling Machines** › **Slicing Machines** › **Drilling Machines** › **Gem Cutting Machines**

LIMITING SPEEDS

The limiting speeds listed in the Bearing Dimensional Tables are guideline values. They are based on a single bearing that is lightly preloaded by means of a spring and subjected to a relatively light load with good heat dissipation.

The limiting speeds with grease lubrication are determined using high quality grease in appropriate amounts. Those listed for oil lubrication are based on the use of oil-air (or oil mist) lubrication. In situations where the lubricating oil is used as a means to remove heat, higher speed can be achieved, however a large amount of oil must be pressure fed through the bearing, so there is significant loss of spindle power.

When single bearings are used in two, three or four row combinations, or the preload is increased to improve spindle rigidity, limiting speeds will be lower than those listed by the factors in the table below.

SPEED FACTOR

Arrangement			EL	L	M	H
DB	Ø	⦸	0.85	0.80	0.65	0.55
DBB	ØØ	⦸⦸	0.80	0.75	0.60	0.45
DBD	ØØ	⦸	0.75	0.70	0.55	0.40

NSKHPS™ SUPER PRECISION ANGULAR CONTACT BALL BEARINGS: 7000C SERIES

15^0 CONTACT ANGLE

Bearing Number	Basic Bearing Dimensions						Preferred Shoulder Dimensions									
	d		D		B		d_a min		D_a max		*D_b max		r_a max		**r_b max	
	mm	inch	mm	inch	mm	inch	mm	inch	mm	inch	mm	inch	mm	inch	mm	inch
7000C	10	0.3937	26	1.0236	8	0.3150	12.5	0.492	23.5	0.925	24.8	0.976	0.3	0.011	0.15	0.005
7001C	12	0.4724	28	1.1024	8	0.3150	14.5	0.571	25.5	1.004	26.8	1.055	0.3	0.011	0.15	0.005
7002C	15	0.5906	32	1.2598	9	0.3543	17.5	0.689	29.5	1.161	30.8	1.213	0.3	0.011	0.15	0.005
7003C	17	0.6693	35	1.3780	10	0.3937	19.5	0.768	32.5	1.280	33.8	1.331	0.3	0.011	0.15	0.005
7004C	20	0.7874	42	1.6535	12	0.4724	25	0.984	37	1.457	39.5	1.555	0.6	0.023	0.3	0.011
7005C	25	0.9843	47	1.8504	12	0.4724	30	1.181	42	1.654	44.5	1.752	0.6	0.023	0.3	0.011
7006C	30	1.1811	55	2.1654	13	0.5118	36	1.417	49	1.929	50	1.969	1.0	0.039	0.5	0.019
7007C	35	1.3780	62	2.4409	14	0.5512	41	1.614	56	2.205	57	2.244	1.0	0.039	0.5	0.019
7008C	40	1.5748	68	2.6772	15	0.5906	46	1.811	62	2.441	63	2.480	1.0	0.039	0.5	0.019
7009C	45	1.7717	75	2.9528	16	0.6299	51	2.008	69	2.717	70	2.756	1.0	0.039	0.5	0.019
7010C	50	1.9685	80	3.1496	16	0.6299	56	2.205	74	2.913	75	2.953	1.0	0.039	0.5	0.019
7011C	55	2.1654	90	3.5433	18	0.7087	62	2.441	83	3.268	85	3.346	1.0	0.039	0.6	0.023
7012C	60	2.3622	95	3.7402	18	0.7087	67	2.638	88	3.465	90	3.543	1.0	0.039	0.6	0.023
7013C	65	2.5591	100	3.9370	18	0.7087	72	2.835	93	3.661	95	3.740	1.0	0.039	0.6	0.023
7014C	70	2.7559	110	4.3307	20	0.7874	77	3.031	103	4.055	105	4.134	1.0	0.039	0.6	0.023
7015C	75	2.9528	115	4.5276	20	0.7874	82	3.228	108	4.252	110	4.331	1.0	0.039	0.6	0.023
7016C	80	3.1496	125	4.9213	22	0.8661	87	3.425	118	4.646	120	4.724	1.0	0.039	0.6	0.023
7017C	85	3.3465	130	5.1181	22	0.8661	92	3.622	123	4.843	125	4.921	1.0	0.039	0.6	0.023
7018C	90	3.5433	140	5.5118	24	0.9449	99	3.898	131	5.157	134	5.276	1.5	0.059	0.8	0.031
7019C	95	3.7402	145	5.7087	24	0.9449	104	4.094	136	5.354	139	5.472	1.5	0.059	0.8	0.031
7020C	100	3.9370	150	5.9055	24	0.9449	109	4.291	141	5.551	144	5.669	1.5	0.059	0.8	0.031
7021C	105	4.1339	160	6.2992	26	1.0236	115	4.528	150	5.906	154	6.063	2.0	0.078	1.0	0.039
7022C	110	4.3307	170	6.6929	28	1.1024	120	4.724	160	6.299	164	6.457	2.0	0.078	1.0	0.039
7024C	120	4.7244	180	7.0866	28	1.1024	130	5.118	170	6.693	174	6.850	2.0	0.078	1.0	0.039
7026C	130	5.1181	200	7.8740	33	1.2992	140	5.512	190	7.480	194	7.638	2.0	0.078	1.0	0.039
7028C	140	5.5118	210	8.2677	33	1.2992	150	5.906	200	7.874	204	8.031	2.0	0.078	1.0	0.039
7030C	150	5.9055	225	8.8583	35	1.3780	162	6.378	213	8.386	218	8.583	2.0	0.078	1.0	0.039
7032C	160	6.2992	240	9.4488	38	1.4961	172	6.772	228	8.976	233	9.173	2.0	0.078	1.0	0.039
7034C	170	6.6929	260	10.2362	42	1.6535	182	7.165	248	9.764	253	9.961	2.0	0.078	1.0	0.039
7036C	180	7.0866	280	11.0236	46	1.8110	192	7.559	268	10.551	273	10.748	2.0	0.078	1.0	0.039
7038C	190	7.4803	290	11.4173	46	1.8110	202	7.953	278	10.945	283	11.142	2.0	0.078	1.0	0.039
7040C	200	7.8740	310	12.2047	51	2.0079	212	8.346	298	11.732	303	11.929	2.0	0.078	0.3	0.011

*D_b is housing diameter for low shoulder **r_b is housing fillet radius for low shoulder

For application limiting speed, please refer to page H-2.

Note: When a ceramic ball is used, limiting speed value will be 1.25 times the value of the steel ball.

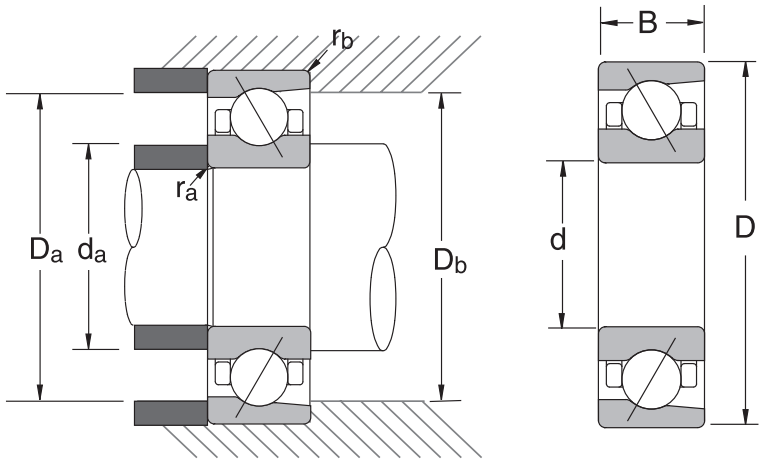

COMMON OPTIONS	
TR	Phenolic Cage
TYN	Polyamide Cage
DU	Duplex Universal
SU	Single Universal
L	Light Preload
M	Medium Preload
H	Heavy Preload
P4	ISO 4 (ABEC 7) Precision
P4Y	NSK Exclusive P4 Accuracy
V1V	Non-contacting Seal
SN24	Ceramic Rolling Element

Bearing Number	Basic Load Ratings				Limiting Speeds (RPM)		Bearing Weight (Approx.)		Sealed Design Available
	C_r		C_{or}						
	N	lbs	N	lbs	Grease	Oil	kg	lbs	
7000C	5600	1250	2490	560	63900	97300	0.019	0.042	-
7001C	6100	1370	2900	650	57500	87500	0.021	0.046	-
7002C	6550	1470	3400	760	49000	74500	0.030	0.066	-
7003C	6950	1560	3800	855	44300	67400	0.039	0.086	-
7004C	11700	2620	6550	1470	37100	56500	0.067	0.147	-
7005C	12300	2760	7400	1670	32000	48700	0.078	0.172	-
7006C	15900	3550	10300	2310	27100	41200	0.114	0.251	*
7007C	20100	4500	13700	3050	23800	36100	0.151	0.332	*
7008C	21600	4850	15900	3550	21300	32500	0.189	0.416	*
7009C	25600	5750	19300	4350	19200	29200	0.238	0.524	*
7010C	27300	6150	21900	4900	17700	27000	0.259	0.570	*
7011C	36000	8050	28600	6450	15900	24200	0.380	0.836	*
7012C	37000	8300	30500	6900	14900	22600	0.405	0.891	*
7013C	39000	8750	34500	7700	14000	21300	0.435	0.957	*
7014C	49000	11100	43000	9650	12800	19500	0.606	1.33	*
7015C	50500	11300	45500	10300	12200	18500	0.643	1.41	*
7016C	61500	13900	55500	12400	11300	17100	0.855	1.88	*
7017C	63000	14200	58500	13200	10700	16300	0.898	1.98	*
7018C	75500	16900	69000	15500	10000	15300	1.16	2.55	*
7019C	77000	17400	73000	16500	9600	14600	1.21	2.66	*
7020C	79000	17800	77000	17400	9200	14000	1.27	2.79	*
7021C	92500	20800	89500	20100	8700	13300	1.58	3.48	-
7022C	111000	25000	104000	23400	8300	12500	1.94	4.27	-
7024C	118000	26500	117000	26200	7700	11700	2.09	4.60	-
7026C	136000	30500	137000	31000	7000	10700	3.22	7.08	-
7028C	139000	31000	145000	32500	6600	10000	3.41	7.50	-
7030C	158000	35500	168000	38000	6200	9400	4.15	9.13	-
7032C	180000	40500	193000	43500	5800	8800	5.11	11.2	-
7034C	215000	48500	234000	52500	5400	8200	6.88	15.1	-
7036C	240000	54000	276000	62000	5000	7700	10.4	22.9	-
7038C	259000	58000	305000	69000	4800	7300	11.2	24.6	-
7040C	278000	62500	340000	76500	4600	6900	13.6	29.9	-

C_r = Dynamic Radial Load Rating C_{or} = Static Radial Load Rating

NSKHPS™ SUPER PRECISION ANGULAR CONTACT BALL BEARINGS: 7000A5 SERIES

25^0 CONTACT ANGLE

Bearing Number	Basic Bearing Dimensions						Preferred Shoulder Dimensions									
	d		D		B		d_a min		D_a max		*D_b max		r_a max		**r_b max	
	mm	inch	mm	inch	mm	inch	mm	inch	mm	inch	mm	inch	mm	inch	mm	inch
7000A5	10	0.3937	26	1.0236	8	0.3150	12.5	0.492	23.5	0.925	24.8	0.976	0.3	0.011	0.15	0.005
7001A5	12	0.4724	28	1.1024	8	0.3150	14.5	0.571	25.5	1.004	26.8	1.055	0.3	0.011	0.15	0.005
7002A5	15	0.5906	32	1.2598	9	0.3543	17.5	0.689	29.5	1.161	30.8	1.213	0.3	0.011	0.15	0.005
7003A5	17	0.6693	35	1.3780	10	0.3937	19.5	0.768	32.5	1.280	33.8	1.331	0.3	0.011	0.15	0.005
7004A5	20	0.7874	42	1.6535	12	0.4724	25	0.984	37	1.457	39.5	1.555	0.6	0.023	0.3	0.011
7005A5	25	0.9843	47	1.8504	12	0.4724	30	1.181	42	1.654	44.5	1.752	0.6	0.023	0.3	0.011
7006A5	30	1.1811	55	2.1654	13	0.5118	36	1.417	49	1.929	50	1.969	1.0	0.039	0.5	0.019
7007A5	35	1.3780	62	2.4409	14	0.5512	41	1.614	56	2.205	57	2.244	1.0	0.039	0.5	0.019
7008A5	40	1.5748	68	2.6772	15	0.5906	46	1.811	62	2.441	63	2.480	1.0	0.039	0.5	0.019
7009A5	45	1.7717	75	2.9528	16	0.6299	51	2.008	69	2.717	70	2.756	1.0	0.039	0.5	0.019
7010A5	50	1.9685	80	3.1496	16	0.6299	56	2.205	74	2.913	75	2.953	1.0	0.039	0.5	0.019
7011A5	55	2.1654	90	3.5433	18	0.7087	62	2.441	83	3.268	85	3.346	1.0	0.039	0.6	0.023
7012A5	60	2.3622	95	3.7402	18	0.7087	67	2.638	88	3.465	90	3.543	1.0	0.039	0.6	0.023
7013A5	65	2.5591	100	3.9370	18	0.7087	72	2.835	93	3.661	95	3.740	1.0	0.039	0.6	0.023
7014A5	70	2.7559	110	4.3307	20	0.7874	77	3.031	103	4.055	105	4.134	1.0	0.039	0.6	0.023
7015A5	75	2.9528	115	4.5276	20	0.7874	82	3.228	108	4.252	110	4.331	1.0	0.039	0.6	0.023
7016A5	80	3.1496	125	4.9213	22	0.8661	87	3.425	118	4.646	120	4.724	1.0	0.039	0.6	0.023
7017A5	85	3.3465	130	5.1181	22	0.8661	92	3.622	123	4.843	125	4.921	1.0	0.039	0.6	0.023
7018A5	90	3.5433	140	5.5118	24	0.9449	99	3.898	131	5.157	134	5.276	1.5	0.059	0.8	0.031
7019A5	95	3.7402	145	5.7087	24	0.9449	104	4.094	136	5.354	139	5.472	1.5	0.059	0.8	0.031
7020A5	100	3.9370	150	5.9055	24	0.9449	109	4.291	141	5.551	144	5.669	1.5	0.059	0.8	0.031
7021A5	105	4.1339	160	6.2992	26	1.0236	115	4.528	150	5.906	154	6.063	2.0	0.078	1.0	0.039
7022A5	110	4.3307	170	6.6929	28	1.1024	120	4.724	160	6.299	164	6.457	2.0	0.078	1.0	0.039
7024A5	120	4.7244	180	7.0866	28	1.1024	130	5.118	170	6.693	174	6.850	2.0	0.078	1.0	0.039
7026A5	130	5.1181	200	7.8740	33	1.2992	140	5.512	190	7.480	194	7.638	2.0	0.078	1.0	0.039
7028A5	140	5.5118	210	8.2677	33	1.2992	150	5.906	200	7.874	204	8.031	2.0	0.078	1.0	0.039
7030A5	150	5.9055	225	8.8583	35	1.3780	162	6.378	213	8.386	218	8.583	2.0	0.078	1.0	0.039
7032A5	160	6.2992	240	9.4488	38	1.4961	172	6.772	228	8.976	233	9.173	2.0	0.078	1.0	0.039
7034A5	170	6.6929	260	10.2362	42	1.6535	182	7.165	248	9.764	253	9.961	2.0	0.078	1.0	0.039
7036A5	180	7.0866	280	11.0236	46	1.8110	192	7.559	268	10.551	273	10.748	2.0	0.078	1.0	0.039
7038A5	190	7.4803	290	11.4173	46	1.8110	202	7.953	278	10.945	283	11.142	2.0	0.078	1.0	0.039
7040A5	200	7.8740	310	12.2047	51	2.0079	212	8.346	298	11.732	303	11.929	2.0	0.078	0.3	0.011

*D_b is housing diameter for low shoulder **r_b is housing fillet radius for low shoulder

For application limiting speed, please refer to page H-2.

Note: When a ceramic ball is used, limiting speed value will be 1.25 times the value of the steel ball.

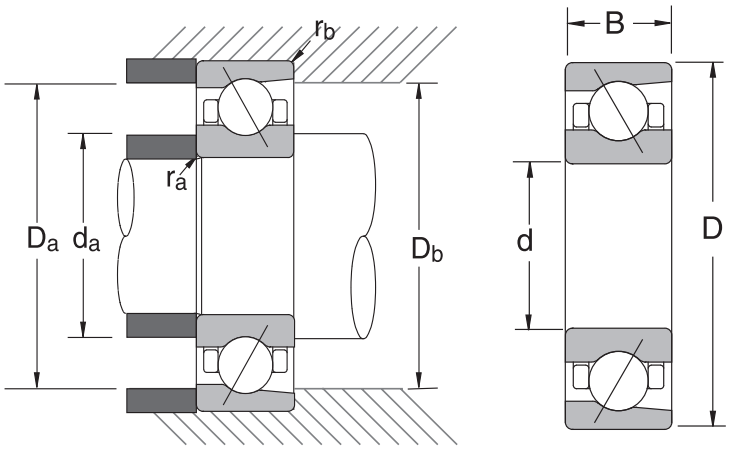

COMMON OPTIONS	
TR	Phenolic Cage
TYN	Polyamide Cage
DU	Duplex Universal
SU	Single Universal
L	Light Preload
M	Medium Preload
H	Heavy Preload
P4	ISO 4 (ABEC 7) Precision
P4Y	NSK Exclusive P4 Accuracy
V1V	Non-contacting Seal
SN24	Ceramic Rolling Element

Bearing Number	Basic Load Ratings				Limiting Speeds (RPM)		Bearing Weight (Approx.)		Sealed Design Available
	C_r		C_{or}						
	N	lbs	N	lbs	Grease	Oil	kg	lbs	
7000A5	5400	1210	2410	540	55600	83400	0.019	0.042	-
7001A5	5850	1320	2790	625	50000	75000	0.021	0.046	-
7002A5	6250	1410	3250	730	42600	63900	0.030	0.066	-
7003A5	6600	1490	3650	820	38500	57700	0.040	0.088	-
7004A5	11200	2510	6250	1410	32300	48400	0.067	0.147	-
7005A5	11700	2630	7100	1590	27800	41700	0.077	0.169	-
7006A5	15100	3400	9800	2200	23600	35300	0.114	0.251	*
7007A5	19100	4300	13000	2930	20700	31000	0.151	0.332	*
7008A5	20500	4600	15100	3400	18600	27800	0.188	0.414	*
7009A5	24300	5450	18300	4100	16700	25000	0.250	0.550	*
7010A5	25800	5800	20800	4700	15400	23100	0.270	0.594	*
7011A5	34000	7650	27200	6100	13800	20700	0.383	0.843	*
7012A5	35000	7850	29100	6550	13000	19400	0.408	0.898	*
7013A5	37000	8300	32500	7300	12200	18200	0.455	1.00	*
7014A5	46500	10500	41000	9200	11200	16700	0.625	1.38	*
7015A5	47500	10700	43500	9750	10600	15800	0.652	1.43	*
7016A5	58500	13100	52500	11800	9800	14700	0.880	1.94	*
7017A5	60000	13400	55500	12500	9400	14000	0.904	1.99	*
7018A5	71000	16000	65500	14800	8700	13100	1.17	2.57	*
7019A5	73000	16400	69500	15600	8400	12500	1.41	3.10	*
7020A5	75000	16800	73500	16500	8000	12000	1.45	3.19	*
7021A5	87500	19700	85000	19100	7600	11400	1.82	4.00	-
7022A5	105000	23700	99000	22200	7200	10800	2.26	4.97	-
7024A5	111000	25000	111000	24900	6700	10000	2.43	5.35	-
7026A5	128000	28900	130000	29300	6100	9100	3.66	8.05	-
7028A5	131000	29400	138000	31000	5800	8600	3.87	8.51	-
7030A5	150000	33500	160000	36000	5400	8000	4.69	10.3	-
7032A5	170000	38000	183000	41000	5000	7500	5.71	12.6	-
7034A5	203000	45500	223000	50000	4700	7000	7.83	17.2	-
7036A5	227000	51000	262000	59000	4400	6600	10.4	22.9	-
7038A5	245000	55000	291000	65500	4200	6300	11.2	24.6	-
7040A5	263000	59000	325000	72500	4000	5900	13.7	30.1	-

C_r = Dynamic Radial Load Rating C_{or} = Static Radial Load Rating

NSKHPS™ SUPER PRECISION ANGULAR CONTACT BALL BEARINGS: 7200C SERIES

15^0 CONTACT ANGLE

Bearing Number	Basic Bearing Dimensions						Preferred Shoulder Dimensions									
	d		D		B		d_a min		D_a max		*D_b max		r_a max		**r_b max	
	mm	inch	mm	inch	mm	inch	mm	inch	mm	inch	mm	inch	mm	inch	mm	inch
7200C	10	0.3937	30	1.1811	9	0.3543	15	0.591	25	0.984	27.5	1.083	0.6	0.023	0.3	0.011
7201C	12	0.4724	32	1.2598	10	0.3937	17	0.669	27	1.063	29.5	1.161	0.6	0.023	0.3	0.011
7202C	15	0.5906	35	1.3780	11	0.4331	20	0.787	30	1.181	32.5	1.280	0.6	0.023	0.3	0.011
7203C	17	0.6693	40	1.5748	12	0.4724	22	0.866	35	1.378	37.5	1.476	0.6	0.023	0.3	0.011
7204C	20	0.7874	47	1.8504	14	0.5512	26	1.024	41	1.614	42	1.654	1.0	0.039	0.5	0.019
7205C	25	0.9843	52	2.0472	15	0.5906	31	1.220	46	1.811	47	1.850	1.0	0.039	0.5	0.019
7206C	30	1.1811	62	2.4409	16	0.6299	36	1.417	56	2.205	57	2.244	1.0	0.039	0.5	0.019
7207C	35	1.3780	72	2.8346	17	0.6693	42	1.654	65	2.559	67	2.638	1.0	0.039	0.6	0.023
7208C	40	1.5748	80	3.1496	18	0.7087	47	1.850	73	2.874	75	2.953	1.0	0.039	0.6	0.023
7209C	45	1.7717	85	3.3465	19	0.7480	52	2.047	78	3.071	80	3.150	1.0	0.039	0.6	0.023
7210C	50	1.9685	90	3.5433	20	0.7874	57	2.244	83	3.268	85	3.346	1.0	0.039	0.6	0.023
7211C	55	2.1654	100	3.9370	21	0.8268	64	2.520	91	3.583	94	3.701	1.5	0.059	0.8	0.031
7212C	60	2.3622	110	4.3307	22	0.8661	69	2.717	101	3.976	104	4.094	1.5	0.059	0.8	0.031
7213C	65	2.5591	120	4.7244	23	0.9055	74	2.913	111	4.370	114	4.488	1.5	0.059	0.8	0.031
7214C	70	2.7559	125	4.9213	24	0.9449	79	3.110	116	4.567	119	4.685	1.5	0.059	0.8	0.031
7215C	75	2.9528	130	5.1181	25	0.9843	84	3.307	121	4.764	124	4.882	1.5	0.059	0.8	0.031
7216C	80	3.1496	140	5.5118	26	1.0236	90	3.543	130	5.118	134	5.276	2.0	0.078	1	0.039
7217C	85	3.3465	150	5.9055	28	1.1024	95	3.740	140	5.512	144	5.669	2.0	0.078	1	0.039
7218C	90	3.5433	160	6.2992	30	1.1811	100	3.937	150	5.906	154	6.063	2.0	0.078	1	0.039
7219C	95	3.7402	170	6.6929	32	1.2598	107	4.213	158	6.220	163	6.417	2.0	0.078	1	0.039
7220C	100	3.9370	180	7.0866	34	1.3386	112	4.409	168	6.614	173	6.811	2.0	0.078	1	0.039
7221C	105	4.1339	190	7.4803	36	1.4173	117	4.606	178	7.008	183	7.205	2.0	0.078	1	0.039
7222C	110	4.3307	200	7.8740	38	1.4961	122	4.803	188	7.402	193	7.598	2.0	0.078	1	0.039
7224C	120	4.7244	215	8.4646	40	1.5748	132	5.197	203	7.992	208	8.189	2.0	0.078	1	0.039
7226C	130	5.1181	230	9.0551	40	1.5748	144	5.669	216	8.504	223	8.780	2.5	0.098	1	0.039
7228C	140	5.5118	250	9.8425	42	1.6535	154	6.063	236	9.291	243	9.567	2.5	0.098	1	0.039
7230C	150	5.9055	270	10.6299	45	1.7717	164	6.457	256	10.079	263	10.354	2.5	0.098	1	0.039

*D_b is housing diameter for low shoulder **r_b is housing fillet radius for low shoulder

For application limiting speed, please refer to page H-2.

Note: When a ceramic ball is used, limiting speed value will be 1.25 times the value of the steel ball.

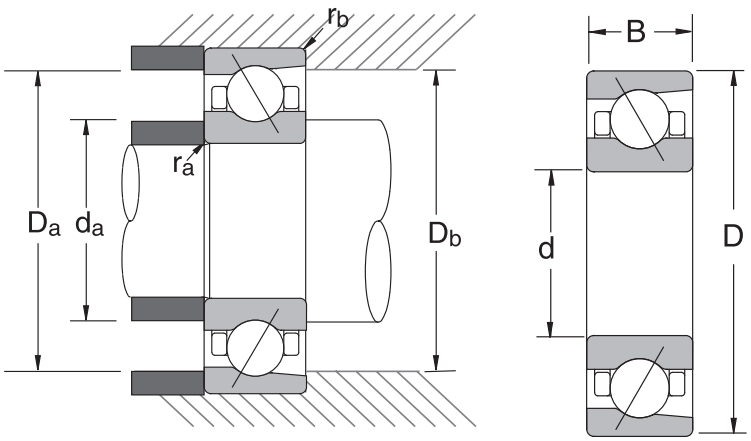

COMMON OPTIONS	
TR	Phenolic Cage
TYN	Polyamide Cage
DU	Duplex Universal
SU	Single Universal
L	Light Preload
M	Medium Preload
H	Heavy Preload
P4	ISO 4 (ABEC 7) Precision
P4Y	NSK Exclusive P4 Accuracy
V1V	Non-contacting Seal
SN24	Ceramic Rolling Element

Bearing Number	Basic Load Ratings				Limiting Speeds (RPM)		Bearing Weight (Approx.)	
	C_r		C_{or}					
	N	lbs	N	lbs	Grease	Oil	kg	lbs
7200C	5650	1280	2610	585	57500	87500	0.032	0.070
7201C	8300	1870	3850	865	52300	79600	0.036	0.079
7202C	9100	2050	4550	1020	46000	70000	0.045	0.099
7203C	11400	2560	5850	1310	40400	61500	0.065	0.143
7204C	15300	3450	8050	1810	34400	52300	0.103	0.227
7205C	17400	3900	10200	2290	29900	45500	0.127	0.279
7206C	24200	5450	14700	3300	25000	38100	0.194	0.427
7207C	32000	7200	19900	4500	21500	32800	0.280	0.616
7208C	38000	8600	25200	5650	19200	29200	0.366	0.805
7209C	43000	9650	28800	6450	17700	27000	0.406	0.893
7210C	45000	10100	31500	7150	16500	25000	0.457	1.01
7211C	55500	12500	40000	9000	14900	22600	0.601	1.32
7212C	67500	15100	49000	11000	13600	20600	0.780	1.72
7213C	77000	17300	58500	13200	12500	19000	1.01	2.22
7214C	83500	18800	64500	14500	11800	18000	1.09	2.40
7215C	87000	19500	70000	15700	11300	17100	1.19	2.62
7216C	97500	21900	77500	17400	10500	16000	1.43	3.15
7217C	113000	25300	90500	20400	9800	14900	1.79	3.94
7218C	129000	29000	105000	23500	9200	14000	2.20	4.84
7219C	139000	31500	112000	25100	8700	13300	2.64	5.81
7220C	157000	35000	127000	28500	8300	12500	3.18	7.00
7221C	171000	38500	143000	32000	7800	11900	3.78	8.32
7222C	185000	41500	160000	36000	7500	11300	4.45	9.79
7224C	209000	47000	192000	43000	6900	10500	5.42	11.9
7226C	217000	48500	209000	47000	6400	9800	6.23	13.7
7228C	250000	56000	254000	57000	5900	9000	7.91	17.4
7230C	284000	64000	305000	68000	5500	8400	11.1	24.4

C_r = Dynamic Radial Load Rating C_{or} = Static Radial Load Rating

NSKHPS™ SUPER PRECISION ANGULAR CONTACT BALL BEARINGS: 7200A5 SERIES

25^0 CONTACT ANGLE

Bearing Number	Basic Bearing Dimensions						Preferred Shoulder Dimensions									
	d		D		B		d_a min		D_a max		*D_b max		r_a max		**r_b max	
	mm	inch	mm	inch	mm	inch	mm	inch	mm	inch	mm	inch	mm	inch	mm	inch
7200A5	10	0.3937	30	1.1811	9	0.3543	15	0.591	25	0.984	27.5	1.083	0.6	0.023	0.3	0.011
7201A5	12	0.4724	32	1.2598	10	0.3937	17	0.669	27	1.063	29.5	1.161	0.6	0.023	0.3	0.011
7202A5	15	0.5906	35	1.3780	11	0.4331	20	0.787	30	1.181	32.5	1.280	0.6	0.023	0.3	0.011
7203A5	17	0.6693	40	1.5748	12	0.4724	22	0.866	35	1.378	37.5	1.476	0.6	0.023	0.3	0.011
7204A5	20	0.7874	47	1.8504	14	0.5512	26	1.024	41	1.614	42	1.654	1.0	0.039	0.5	0.019
7205A5	25	0.9843	52	2.0472	15	0.5906	31	1.220	46	1.811	47	1.850	1.0	0.039	0.5	0.019
7206A5	30	1.1811	62	2.4409	16	0.6299	36	1.417	56	2.205	57	2.244	1.0	0.039	0.5	0.019
7207A5	35	1.3780	72	2.8346	17	0.6693	42	1.654	65	2.559	67	2.638	1.0	0.039	0.6	0.023
7208A5	40	1.5748	80	3.1496	18	0.7087	47	1.850	73	2.874	75	2.953	1.0	0.039	0.6	0.023
7209A5	45	1.7717	85	3.3465	19	0.7480	52	2.047	78	3.071	80	3.150	1.0	0.039	0.6	0.023
7210A5	50	1.9685	90	3.5433	20	0.7874	57	2.244	83	3.268	85	3.346	1.0	0.039	0.6	0.023
7211A5	55	2.1654	100	3.9370	21	0.8268	64	2.520	91	3.583	94	3.701	1.5	0.059	0.8	0.031
7212A5	60	2.3622	110	4.3307	22	0.8661	69	2.717	101	3.976	104	4.094	1.5	0.059	0.8	0.031
7213A5	65	2.5591	120	4.7244	23	0.9055	74	2.913	111	4.370	114	4.488	1.5	0.059	0.8	0.031
7214A5	70	2.7559	125	4.9213	24	0.9449	79	3.110	116	4.567	119	4.685	1.5	0.059	0.8	0.031
7215A5	75	2.9528	130	5.1181	25	0.9843	84	3.307	121	4.764	124	4.882	1.5	0.059	0.8	0.031
7216A5	80	3.1496	140	5.5118	26	1.0236	90	3.543	130	5.118	134	5.276	2.0	0.078	1	0.039
7217A5	85	3.3465	150	5.9055	28	1.1024	95	3.740	140	5.512	144	5.669	2.0	0.078	1	0.039
7218A5	90	3.5433	160	6.2992	30	1.1811	100	3.937	150	5.906	154	6.063	2.0	0.078	1	0.039
7219A5	95	3.7402	170	6.6929	32	1.2598	107	4.213	158	6.220	163	6.417	2.0	0.078	1	0.039
7220A5	100	3.9370	180	7.0866	34	1.3386	112	4.409	168	6.614	173	6.811	2.0	0.078	1	0.039
7221A5	105	4.1339	190	7.4803	36	1.4173	117	4.606	178	7.008	183	7.205	2.0	0.078	1	0.039
7222A5	110	4.3307	200	7.8740	38	1.4961	122	4.803	188	7.402	193	7.598	2.0	0.078	1	0.039
7224A5	120	4.7244	215	8.4646	40	1.5748	132	5.197	203	7.992	208	8.189	2.0	0.078	1	0.039
7226A5	130	5.1181	230	9.0551	40	1.5748	144	5.669	216	8.504	223	8.780	2.5	0.098	1	0.039
7228A5	140	5.5118	250	9.8425	42	1.6535	154	6.063	236	9.291	243	9.567	2.5	0.098	1	0.039
7230A5	150	5.9055	270	10.6299	45	1.7717	164	6.457	256	10.079	263	10.354	2.5	0.098	1	0.039

*D_b is housing diameter for low shoulder **r_b is housing fillet radius for low shoulder

For application limiting speed, please refer to page H-2.

Note: When a ceramic ball is used, limiting speed value will be 1.25 times the value of the steel ball.

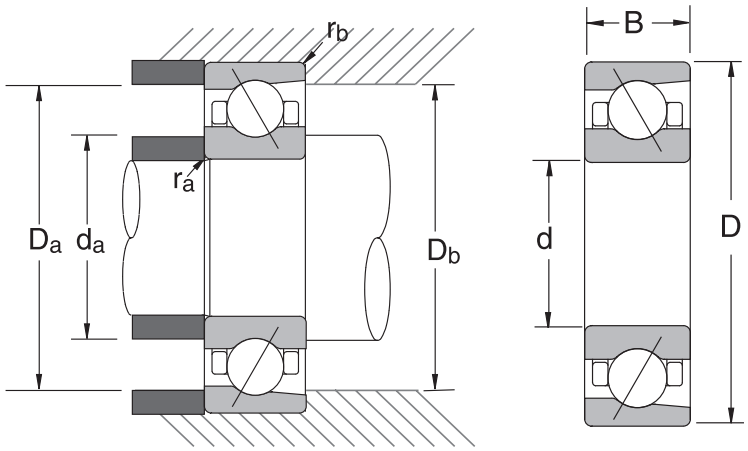

COMMON OPTIONS	
TR	Phenolic Cage
TYN	Polyamide Cage
DU	Duplex Universal
SU	Single Universal
L	Light Preload
M	Medium Preload
H	Heavy Preload
P4	ISO 4 (ABEC 7) Precision
P4Y	NSK Exclusive P4 Accuracy
V1V	Non-contacting Seal
SN24	Ceramic Rolling Element

Bearing Number	Basic Load Ratings				Limiting Speeds (RPM)		Bearing Weight (Approx.)	
	C_r		C_{or}					
	N	lbs	N	lbs	Grease	Oil	kg	lbs
7200A5	5450	1230	2510	565	50000	75000	0.031	0.068
7201A5	8050	1810	3700	835	45500	68200	0.036	0.079
7202A5	8750	1970	4350	980	40000	60000	0.044	0.097
7203A5	11000	2470	5600	1260	35100	52700	0.064	0.141
7204A5	14700	3300	7750	1750	29900	44800	0.102	0.224
7205A5	16700	3750	9800	2200	26000	39000	0.130	0.286
7206A5	23200	5200	14100	3150	21800	32700	0.194	0.427
7207A5	30500	6850	19100	4300	18700	28100	0.277	0.609
7208A5	36500	8200	24100	5400	16700	25000	0.362	0.796
7209A5	41000	9200	27600	6200	15400	23100	0.402	0.884
7210A5	43000	9650	30500	6800	14300	21500	0.453	0.997
7211A5	53000	11900	38000	8600	13000	19400	0.596	1.31
7212A5	64000	14400	47000	10600	11800	17700	0.773	1.70
7213A5	73000	16500	56000	12600	10900	16300	1.00	2.20
7214A5	79500	17900	61500	13800	10300	15400	1.08	2.38
7215A5	82500	18600	66500	15000	9800	14700	1.18	2.60
7216A5	93000	20900	74000	16600	9100	13700	1.42	3.12
7217A5	107000	24100	86500	19400	8600	12800	1.79	3.94
7218A5	123000	27600	100000	22500	8000	12000	2.31	5.08
7219A5	133000	29900	107000	24000	7600	11400	2.63	5.79
7220A5	149000	33500	121000	27300	7200	10800	3.16	6.95
7221A5	163000	36500	137000	30500	6800	10200	3.77	8.29
7222A5	176000	39500	153000	34500	6500	9700	4.45	9.79
7224A5	199000	44500	184000	41500	6000	9000	5.42	11.9
7226A5	206000	46500	199000	45000	5600	8400	6.22	13.7
7228A5	238000	53500	242000	54500	5200	7700	7.90	17.4
7230A5	270000	61000	290000	65000	4800	7200	11.1	24.4

C_r = Dynamic Radial Load Rating C_{or} = Static Radial Load Rating

NSKHPS™ SUPER PRECISION ANGULAR CONTACT BALL BEARINGS: 7900C SERIES

15^0 CONTACT ANGLE

Bearing Number	Basic Bearing Dimensions						Preferred Shoulder Dimensions									
	d		D		B		d_a min		D_a max		*D_b max		r_a max		**r_b max	
	mm	inch	mm	inch	mm	inch	mm	inch	mm	inch	mm	inch	mm	inch	mm	inch
7900C	10	0.3937	22	0.8661	6	0.2362	12.5	0.492	19.5	0.768	20.8	0.819	0.3	0.011	0.15	0.005
7901C	12	0.4724	24	0.9449	6	0.2362	14.5	0.571	21.5	0.846	22.8	0.898	0.3	0.011	0.15	0.005
7902C	15	0.5906	28	1.1024	7	0.2756	17.5	0.689	25.5	1.004	26.8	1.055	0.3	0.011	0.15	0.005
7903C	17	0.6693	30	1.1811	7	0.2756	19.5	0.768	27.5	1.083	28.8	1.134	0.3	0.011	0.15	0.005
7904C	20	0.7874	37	1.4567	9	0.3543	22.5	0.886	34.5	1.358	35.8	1.409	0.3	0.011	0.15	0.005
7905C	25	0.9843	42	1.6535	9	0.3543	27.5	1.083	39.5	1.555	40.8	1.606	0.3	0.011	0.15	0.005
7906C	30	1.1811	47	1.8504	9	0.3543	32.5	1.280	44.5	1.752	45.8	1.803	0.3	0.011	0.15	0.005
7907C	35	1.3780	55	2.1654	10	0.3937	40	1.575	50	1.969	52.5	2.067	0.6	0.023	0.3	0.011
7908C	40	1.5748	62	2.4409	12	0.4724	45	1.772	57	2.244	59.5	2.343	0.6	0.023	0.3	0.011
7909C	45	1.7717	68	2.6772	12	0.4724	50	1.969	63	2.480	65.5	2.579	0.6	0.023	0.3	0.011
7910C	50	1.9685	72	2.8346	12	0.4724	55	2.165	67	2.638	69.5	2.736	0.6	0.023	0.3	0.011
7911C	55	2.1654	80	3.1496	13	0.5118	61	2.402	74	2.913	75	2.953	1.0	0.039	0.5	0.019
7912C	60	2.3622	85	3.3465	13	0.5118	66	2.598	79	3.110	80	3.150	1.0	0.039	0.5	0.019
7913C	65	2.5591	90	3.5433	13	0.5118	71	2.795	84	3.307	85	3.346	1.0	0.039	0.5	0.019
7914C	70	2.7559	100	3.9370	16	0.6299	76	2.992	94	3.701	95	3.740	1.0	0.039	0.5	0.019
7915C	75	2.9528	105	4.1339	16	0.6299	81	3.189	99	3.898	100	3.937	1.0	0.039	0.5	0.019
7916C	80	3.1496	110	4.3307	16	0.6299	86	3.386	104	4.094	105	4.134	1.0	0.039	0.5	0.019
7917C	85	3.3465	120	4.7244	18	0.7087	92	3.622	113	4.449	115	4.528	1.0	0.039	0.6	0.023
7918C	90	3.5433	125	4.9213	18	0.7087	97	3.819	118	4.646	120	4.724	1.0	0.039	0.6	0.023
7919C	95	3.7402	130	5.1181	18	0.7087	102	4.016	123	4.843	125	4.921	1.0	0.039	0.6	0.023
7920C	100	3.9370	140	5.5118	20	0.7874	107	4.213	133	5.236	135	5.315	1.0	0.039	0.6	0.023
7921C	105	4.1339	145	5.7087	20	0.7874	112	4.409	138	5.433	140	5.512	1.0	0.039	0.6	0.023
7922C	110	4.3307	150	5.9055	20	0.7874	117	4.606	143	5.630	145	5.709	1.0	0.039	0.6	0.023
7924C	120	4.7244	165	6.4961	22	0.8661	127	5.000	158	6.220	160	6.299	1.0	0.039	0.6	0.023
7926C	130	5.1181	180	7.0866	24	0.9449	139	5.472	171	6.732	174	6.850	1.5	0.059	0.8	0.031
7928C	140	5.5118	190	7.4803	24	0.9449	149	5.866	181	7.126	184	7.244	1.5	0.059	0.8	0.031
7930C	150	5.9055	210	8.2677	28	1.1024	160	6.299	200	7.874	204	8.031	2.0	0.078	1	0.039
7932C	160	6.2992	220	8.6614	28	1.1024	170	6.693	210	8.268	214	8.425	2.0	0.078	1	0.039
7934C	170	6.6929	230	9.0551	28	1.1024	180	7.087	220	8.661	224	8.819	2.0	0.078	1	0.039
7936C	180	7.0866	250	9.8425	33	1.2992	190	7.480	240	9.449	244	9.606	2.0	0.078	1	0.039
7938C	190	7.4803	260	10.2362	33	1.2992	200	7.874	250	9.843	254	10.000	2.0	0.078	1	0.039
7940C	200	7.8740	280	11.0236	38	1.4961	212	8.346	268	10.551	273	10.748	2.0	0.078	1	0.039

*D_b is housing diameter for low shoulder **r_b is housing fillet radius for low shoulder

For application limiting speed, please refer to page H-2.

Note: When a ceramic ball is used, limiting speed value will be 1.25 times the value of the steel ball.

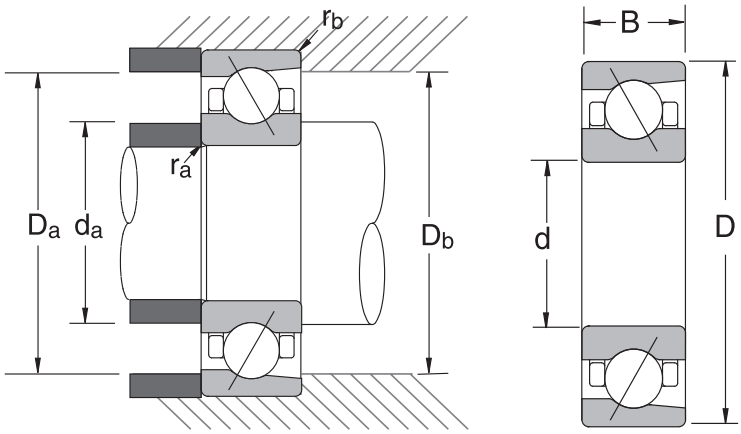

COMMON OPTIONS	
TR	Phenolic Cage
TYN	Polyamide Cage
DU	Duplex Universal
SU	Single Universal
L	Light Preload
M	Medium Preload
H	Heavy Preload
P4	ISO 4 (ABEC 7) Precision
P4Y	NSK Exclusive P4 Accuracy
V1V	Non-contacting Seal
SN24	Ceramic Rolling Element

Bearing Number	Basic Load Ratings				Limiting Speeds (RPM)		Bearing Weight (Approx.)		Sealed Design Available
	C_r		C_{or}						
	N	lbs	N	lbs	Grease	Oil	kg	lbs	
7900C	3150	710	1520	340	71900	109400	0.010	0.022	–
7901C	3550	795	1860	415	63900	97300	0.011	0.024	–
7902C	5000	1120	2640	595	53500	81400	0.016	0.035	–
7903C	5250	1180	2940	660	49000	74500	0.017	0.037	–
7904C	7300	1640	4250	955	40400	61500	0.036	0.079	–
7905C	8250	1850	5400	1220	34400	52300	0.043	0.095	–
7906C	8700	1960	6250	1410	29900	45500	0.049	0.108	*
7907C	12700	2850	9150	2050	25600	38900	0.074	0.163	*
7908C	15900	3550	11700	2640	22600	34400	0.109	0.240	*
7909C	16800	3800	13400	3000	20400	31000	0.129	0.284	*
7910C	17700	4000	15000	3350	18900	28700	0.130	0.286	*
7911C	20100	4500	17700	4000	17100	26000	0.182	0.400	*
7912C	20400	4600	18700	4200	15900	24200	0.195	0.429	*
7913C	21200	4800	20500	4600	14900	22600	0.208	0.458	*
7914C	29500	6650	27800	6250	13600	20600	0.338	0.744	*
7915C	30000	6750	29300	6600	12800	19500	0.358	0.788	*
7916C	30500	6850	30500	6900	12200	18500	0.377	0.829	*
7917C	41000	9200	40500	9150	11300	17100	0.534	1.17	*
7918C	44000	9850	46000	10300	10700	16300	0.568	1.25	*
7919C	44500	10000	48000	10800	10300	15600	0.597	1.31	*
7920C	52500	11800	54000	12200	9600	14600	0.800	1.76	*
7921C	53500	12100	57000	12800	9200	14000	0.831	1.83	–
7922C	54500	12300	59500	13400	8900	13500	0.867	1.91	–
7924C	75500	16900	81000	18300	8100	12300	1.16	2.55	–
7926C	82500	18600	91000	20400	7500	11300	1.50	3.30	–
7928C	83500	18800	95500	21400	7000	10700	1.63	3.59	–
7930C	107000	24100	122000	27400	6400	9800	2.96	6.51	–
7932C	112000	25100	133000	29800	6100	9300	3.10	6.82	–
7934C	118000	26600	148000	33500	5800	8800	3.36	7.39	–
7936C	152000	34500	184000	41500	5400	8200	4.90	10.8	–
7938C	155000	34500	192000	43000	5200	7800	4.98	11.0	–
7940C	199000	44500	244000	55000	4800	7300	6.85	15.1	–

C_r = Dynamic Radial Load Rating C_{or} = Static Radial Load Rating

NSKHPS™ SUPER PRECISION ANGULAR CONTACT BALL BEARINGS: 7900A5 SERIES

25^0 CONTACT ANGLE

Bearing Number	Basic Bearing Dimensions						Preferred Shoulder Dimensions									
	d		D		B		d_a min		D_a max		*D_b max		r_a max		**r_b max	
	mm	inch	mm	inch	mm	inch	mm	inch	mm	inch	mm	inch	mm	inch	mm	inch
7900A5	10	0.3937	22	0.8661	6	0.2362	12.5	0.492	19.5	0.768	20.8	0.819	0.3	0.011	0.15	0.005
7901A5	12	0.4724	24	0.9449	6	0.2362	14.5	0.571	21.5	0.846	22.8	0.898	0.3	0.011	0.15	0.005
7902A5	15	0.5906	28	1.1024	7	0.2756	17.5	0.689	25.5	1.004	26.8	1.055	0.3	0.011	0.15	0.005
7903A5	17	0.6693	30	1.1811	7	0.2756	19.5	0.768	27.5	1.083	28.8	1.134	0.3	0.011	0.15	0.005
7904A5	20	0.7874	37	1.4567	9	0.3543	22.5	0.886	34.5	1.358	35.8	1.409	0.3	0.011	0.15	0.005
7905A5	25	0.9843	42	1.6535	9	0.3543	27.5	1.083	39.5	1.555	40.8	1.606	0.3	0.011	0.15	0.005
7906A5	30	1.1811	47	1.8504	9	0.3543	32.5	1.280	44.5	1.752	45.8	1.803	0.3	0.011	0.15	0.005
7907A5	35	1.3780	55	2.1654	10	0.3937	40	1.575	50	1.969	52.5	2.067	0.6	0.023	0.3	0.011
7908A5	40	1.5748	62	2.4409	12	0.4724	45	1.772	57	2.244	59.5	2.343	0.6	0.023	0.3	0.011
7909A5	45	1.7717	68	2.6772	12	0.4724	50	1.969	63	2.480	65.5	2.579	0.6	0.023	0.3	0.011
7910A5	50	1.9685	72	2.8346	12	0.4724	55	2.165	67	2.638	69.5	2.736	0.6	0.023	0.3	0.011
7911A5	55	2.1654	80	3.1496	13	0.5118	61	2.402	74	2.913	75	2.953	1.0	0.039	0.5	0.019
7912A5	60	2.3622	85	3.3465	13	0.5118	66	2.598	79	3.110	80	3.150	1.0	0.039	0.5	0.019
7913A5	65	2.5591	90	3.5433	13	0.5118	71	2.795	84	3.307	85	3.346	1.0	0.039	0.5	0.019
7914A5	70	2.7559	100	3.9370	16	0.6299	76	2.992	94	3.701	95	3.740	1.0	0.039	0.5	0.019
7915A5	75	2.9528	105	4.1339	16	0.6299	81	3.189	99	3.898	100	3.937	1.0	0.039	0.5	0.019
7916A5	80	3.1496	110	4.3307	16	0.6299	86	3.386	104	4.094	105	4.134	1.0	0.039	0.5	0.019
7917A5	85	3.3465	120	4.7244	18	0.7087	92	3.622	113	4.449	115	4.528	1.0	0.039	0.6	0.023
7918A5	90	3.5433	125	4.9213	18	0.7087	97	3.819	118	4.646	120	4.724	1.0	0.039	0.6	0.023
7919A5	95	3.7402	130	5.1181	18	0.7087	102	4.016	123	4.843	125	4.921	1.0	0.039	0.6	0.023
7920A5	100	3.9370	140	5.5118	20	0.7874	107	4.213	133	5.236	135	5.315	1.0	0.039	0.6	0.023
7921A5	105	4.1339	145	5.7087	20	0.7874	112	4.409	138	5.433	140	5.512	1.0	0.039	0.6	0.023
7922A5	110	4.3307	150	5.9055	20	0.7874	117	4.606	143	5.630	145	5.709	1.0	0.039	0.6	0.023
7924A5	120	4.7244	165	6.4961	22	0.8661	127	5.000	158	6.220	160	6.299	1.0	0.039	0.6	0.023
7926A5	130	5.1181	180	7.0866	24	0.9449	139	5.472	171	6.732	174	6.850	1.5	0.059	0.8	0.031
7928A5	140	5.5118	190	7.4803	24	0.9449	149	5.866	181	7.126	184	7.244	1.5	0.059	0.8	0.031
7930A5	150	5.9055	210	8.2677	28	1.1024	160	6.299	200	7.874	204	8.031	2.0	0.078	1	0.039
7932A5	160	6.2992	220	8.6614	28	1.1024	170	6.693	210	8.268	214	8.425	2.0	0.078	1	0.039
7934A5	170	6.6929	230	9.0551	28	1.1024	180	7.087	220	8.661	224	8.819	2.0	0.078	1	0.039
7936A5	180	7.0866	250	9.8425	33	1.2992	190	7.480	240	9.449	244	9.606	2.0	0.078	1	0.039
7938A5	190	7.4803	260	10.2362	33	1.2992	200	7.874	250	9.843	254	10.000	2.0	0.078	1	0.039
7940A5	200	7.8740	280	11.0236	38	1.4961	212	8.346	268	10.551	273	10.748	2.0	0.078	1	0.039

*D_b is housing diameter for low shoulder **r_b is housing fillet radius for low shoulder

For application limiting speed, please refer to page H-2.

Note: When a ceramic ball is used, limiting speed value will be 1.25 times the value of the steel ball.

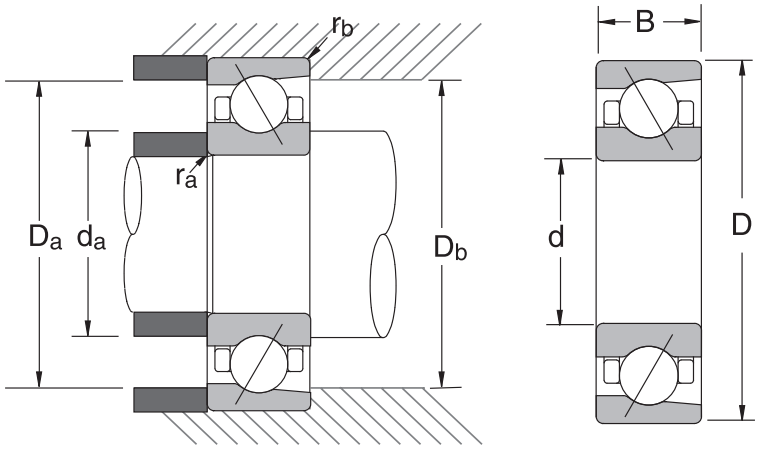

COMMON OPTIONS	
TR	Phenolic Cage
TYN	Polyamide Cage
DU	Duplex Universal
SU	Single Universal
L	Light Preload
M	Medium Preload
H	Heavy Preload
P4	ISO 4 (ABEC 7) Precision
P4Y	NSK Exclusive P4 Accuracy
V1V	Non-contacting Seal
SN24	Ceramic Rolling Element

Bearing Number	Basic Load Ratings				Limiting Speeds (RPM)		Bearing Weight (Approx.)		Sealed Design Available
	C_r		C_{or}						
	N	lbs	N	lbs	Grease	Oil	kg	lbs	
7900A5	3000	680	1450	325	62500	93800	0.009	0.020	–
7901A5	3350	755	1770	400	55600	83400	0.011	0.024	–
7902A5	4750	1070	2530	570	46600	69800	0.016	0.035	–
7903A5	5000	1120	2800	630	42600	63900	0.017	0.037	–
7904A5	6950	1560	4050	910	35100	52700	0.037	0.081	–
7905A5	7800	1750	5150	1160	29900	44800	0.043	0.095	–
7906A5	8250	1850	5950	1340	26000	39000	0.050	0.110	*
7907A5	12000	2700	8700	1950	22300	33400	0.075	0.165	*
7908A5	15000	3400	11200	2510	19700	29500	0.110	0.242	*
7909A5	15900	3600	12700	2850	17700	26600	0.130	0.286	*
7910A5	16700	3750	14200	3200	16400	24600	0.132	0.290	*
7911A5	19000	4250	16800	3750	14900	22300	0.184	0.405	*
7912A5	19200	4300	17700	4000	13800	20700	0.198	0.436	*
7913A5	20000	4500	19400	4350	13000	19400	0.211	0.464	*
7914A5	27900	6250	26300	5900	11800	17700	0.341	0.750	*
7915A5	28300	6350	27700	6200	11200	16700	0.355	0.781	*
7916A5	28700	6450	29000	6550	10600	15800	0.381	0.838	*
7917A5	38500	8650	38500	8650	9800	14700	0.541	1.19	*
7918A5	41000	9250	43500	9800	9400	14000	0.560	1.23	*
7919A5	42000	9400	45500	10200	8900	13400	0.603	1.33	*
7920A5	49500	11200	51500	11500	8400	12500	0.808	1.78	*
7921A5	50500	11400	54000	12100	8000	12000	0.820	1.80	–
7922A5	51500	11600	56000	12600	7700	11600	0.877	1.93	–
7924A5	71000	16000	77000	17300	7100	10600	1.15	2.53	–
7926A5	78000	17500	86000	19300	6500	9700	1.54	3.39	–
7928A5	78500	17700	90000	20300	6100	9100	1.63	3.59	–
7930A5	101000	22800	115000	25900	5600	8400	2.97	6.53	–
7932A5	105000	23700	125000	28200	5300	7900	3.12	6.86	–
7934A5	112000	25100	140000	31500	5000	7500	3.36	7.39	–
7936A5	144000	32500	174000	39000	4700	7000	4.94	10.9	–
7938A5	146000	32500	182000	41000	4500	6700	5.12	11.3	–
7940A5	187000	42000	231000	52000	4200	6300	6.92	15.2	–

C_r = Dynamic Radial Load Rating C_{or} = Static Radial Load Rating

HIGH SPEED SUPER PRECISION ANGULAR CONTACT BALL BEARINGS

Bearing Bore
Diameter (mm)

65

BNR

Bearing Type
BNR: 18° Contact Angle (Robust Series)
BER: 25° Contact Angle (Robust Series)
BSR: 15° Contact Angle (Robust Grinding Series)

Dimension Series
10: ISO 10 Size
19: ISO 19 Size

10

H

Material Symbol
X: SHX Steel Rings and Ceramic Balls
S: Steel Ball (Robust Series)
H: Ceramic Ball (Robust Series)
E: Steel Ball (Robust Series)

Cage Symbols
TYN: Polyamide
T: Phenolic

T

DU

Combination Symbols
SU: Single Universal
DU: Duplex Universal

Preload Symbols
EL: Extra Light
L: Light
M: Medium

EL

P4Y

Precision Class:
P4: ISO Class 4 (ABEC7)
P4Y*: NSK Exclusive P4 Accuracy
P3: Dimensions - ISO Class 4 Running Accuracy : ISO Class 2
P2: ISO Class 2 (ABEC9)

*P4Y indicates special ID/OD tighter tolerance for ease of matching sets.

Please refer to the bearing tables for exact part number options.

INTERCHANGE

Description		Interchange						
		NSK	*OLD NSK	SKF	BARDEN	FAF/TIMKEN	SNFA	NTN
Part No.	Ultra Light Robust High Speed Series	XXBNR19	XXBNC19	719XXCE	ZSB19XX	93XXWO,WN,HX	VEBXX	HSB9XX
	Extra Light Robust High Speed Series	XXBNR10	XXBNC10	70XXCE	ZSB1XX	91XXWO,WN,HX	VEXXX	HSB0XX
	Ultra Light Robust High Speed Series for Grinding Spindles	XXBSR19	XXBNT19	-	-	-	-	BNT9XX
	Extra Light Robust High Speed Series for Grinding Spindles	XXBSR10	XXBNT10	-	XXBX48	-	-	BNT0XX
Part Number Suffix	Polyamide Cage	TYN	TY	BLANK, TNH	TMT	PRC	P	T2
	Phenolic Cage	TR	T	-	T, TA	CR	C	T1
	Duplex Universal	DU	DU	DG	DU	DU	DU	D
	Single Universal	SU	SU	G	U	SU	U	BLANK
	Extra Light Preload	EL	EL	A	-	X	-	GL
	Light Preload	L	L	B	L	L	L	GN
	Ceramic Balls	H	SN24	HC	C**	C**	/NS	5S**
	Steel Balls	S/E	BLANK	BLANK	BLANK	BLANK	BLANK	BLANK
	ABEC 7 Precision	P4Y	P4	P4	BLANK	MM/MMV**	7	P4
	ABEC 9 Precision	P2	P2	P2	ABEC 9	MMX**	9	P2

*BNR has replaced BNC series. P4Y tolerance specification replaces P4. P4Y tolerance specification has tighter bore and OD control than ABEC 7 (class 4 or P4). NSK supplies the following bearing series with P4Y tolerance: 7000; 7200; 7900; and BNR.
** Indicates prefix not suffix

The competitive manufacturers are provided for a convenient source of unit substitution. They can be considered interchangeable in most instances, but for special applications, please contact NSK. NSK assumes no liability with respect to errors or omissions.

APPLICATIONS

High Speed Super Precision Angular Contact ball bearings are now available due to NSK's new optimized design, under the ROBUST name. Allowing increased speeds and improved performance, these series are available in applications specific designs for machining center applications (BNR), and high speed grinding applications (BGR) – both allowing customers to push the limits of existing speeds.

› Machining Centers › Grinding Machines › High Frequency Spindles › Lathes › Milling Machines

HIGH SPEED SUPER PRECISION ANGULAR CONTACT BALL BEARINGS

EXAMPLE OF OUTER AND INNER RING FACE ARRANGEMENTS FOR A VARIETY OF MATCHING COMBINATIONS

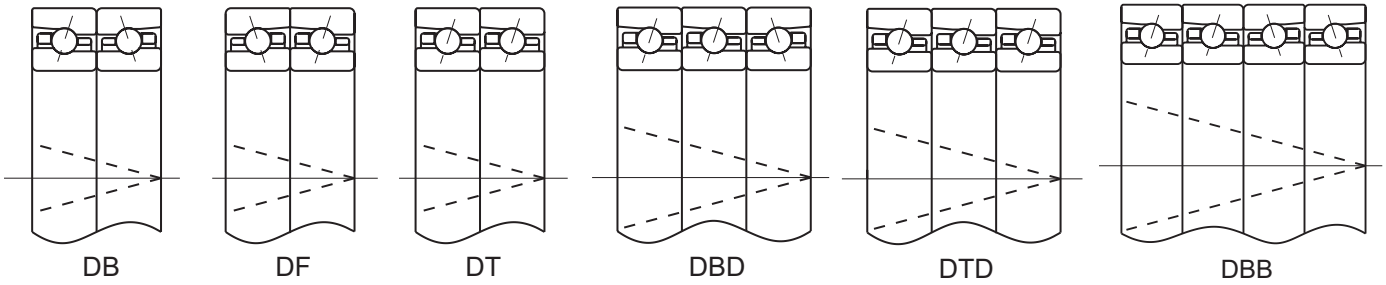

P4Y BORE AND OD TOLERANCE - EXCLUSIVE TO NSK

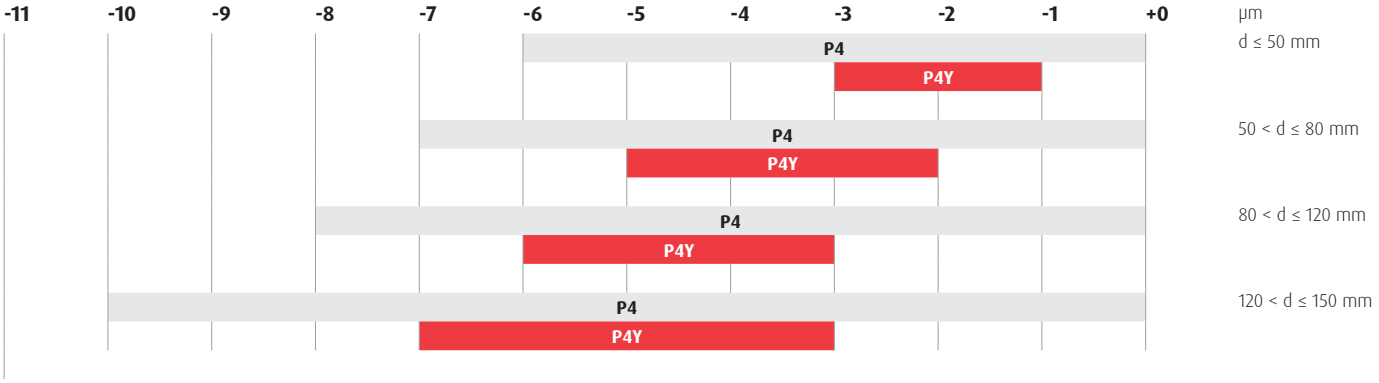

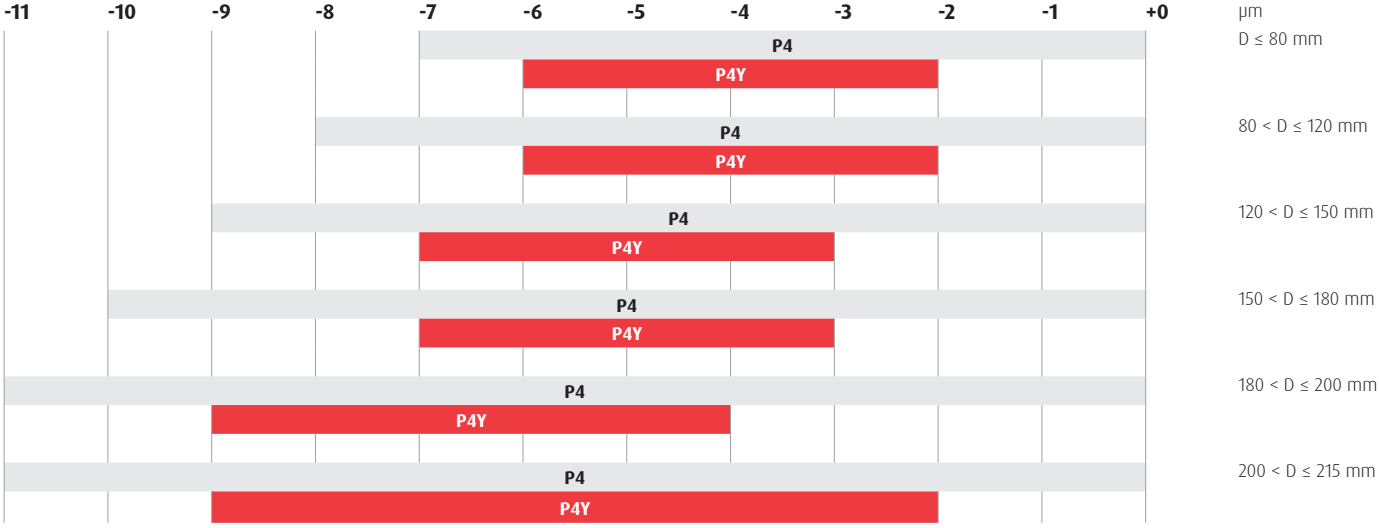

RECOMMENDED GREASE QUANTITIES

THE RECOMMENDED GREASE QUANTITIES FOR HIGH-SPEED SPINDLE BEARINGS

Unit: cc/bearing

Bore Number	Nominal bearing bore dia. (mm)	Angular Contact Ball Bearing: 15% of internal space						Cylindrical Roller Bearing: 10% of internal space			
		BNR19 BGR19 79 Series	70 Series	72 Series	BNR10 BER10 BAR10 BTR10	TAC29F TAC29D	TAC20F TAC20D	NN49 Series NNU49 Series	NN39 Series	NN30 Series	N10 Series
5	5	–	–	0.03	–	–	–	–	–	–	–
6	6	–	0.04	0.07	–	–	–	–	–	–	–
7	7	–	0.07	–	–	–	–	–	–	–	–
8	8	–	0.12	0.10	–	–	–	–	–	–	–
00	10	0.06	0.13	0.16	–	–	–	–	–	–	–
01	12	0.06	0.14	0.23	–	–	–	–	–	–	–
02	15	0.11	0.18	0.29	–	–	–	–	–	–	–
03	17	0.13	0.24	0.41	–	–	–	–	–	–	–
04	20	0.23	0.44	0.68	–	–	–	–	–	–	–
05	25	0.27	0.52	0.85	–	–	–	–	–	0.40	–
06	30	0.31	0.69	1.20	0.58	–	–	–	–	0.60	0.40
07	35	0.48	0.98	1.70	0.78	–	–	–	–	0.80	0.60
08	40	0.75	1.20	2.10	0.92	–	–	–	–	1.00	0.70
09	45	0.83	1.50	2.60	1.20	–	–	–	–	1.30	1.00
10	50	0.91	1.60	3.00	1.20	–	1.70	–	–	1.40	1.10
11	55	1.10	2.40	3.90	1.70	–	2.40	–	–	2.00	1.50
12	60	1.20	2.60	4.80	1.80	–	2.50	–	–	2.10	1.60
13	65	1.30	2.60	5.70	1.90	–	2.70	–	–	2.20	1.60
14	70	2.10	3.60	6.50	2.80	–	3.90	–	–	3.20	2.40
15	75	2.30	3.60	7.00	2.90	–	4.20	–	–	3.50	2.50
16	80	2.40	5.10	8.70	3.80	–	5.30	–	–	4.70	3.50
17	85	3.50	5.30	11.00	4.00	–	5.50	–	–	4.90	3.70
18	90	3.60	6.60	13.00	5.50	–	7.60	–	–	6.50	4.50
19	95	3.60	6.80	16.00	5.70	–	8.00	–	–	6.60	4.70
20	100	4.90	7.20	19.00	6.10	5.30	8.30	5.40	4.50	6.80	4.90
21	105	5.10	9.00	23.00	7.60	–	10.00	5.60	4.60	9.30	5.90
22	110	5.20	12.00	27.00	9.10	5.70	12.00	5.70	4.80	11.00	7.50
24	120	7.90	12.00	31.00	9.80	7.60	13.00	8.40	6.50	13.00	8.10
26	130	9.00	18.00	34.00	15.00	9.50	19.00	11.00	8.50	18.00	12.00
28	140	9.90	20.00	42.00	17.00	–	44.00	12.00	9.30	20.00	13.00
30	150	14.00	25.00	53.00	22.00	33.00	55.00	24.00	14.00	23.00	16.00
32	160	16.00	34.00	61.00	26.00	36.00	67.00	20.00	15.00	29.00	21.00
34	170	14.00	42.00	80.00	33.00	39.00	84.00	21.00	15.00	38.00	38.00
36	180	22.00	51.00	82.00	46.00	54.00	116.00	28.00	23.00	51.00	36.00
38	190	27.00	47.00	86.00	50.00	51.00	127.00	30.00	24.00	54.00	37.00
40	200	39.00	76.00	105.00	61.00	80.00	156.00	44.00	35.00	69.00	47.00
44	220	42.00	89.00	157.00	71.00	83.00	198.00	37.00	37.00	94.00	64.00
48	240	41.00	102.00	180.00	76.00	96.00	214.00	52.00	40.00	99.00	68.00
52	260	77.00	157.00	283.00	111.00	158.00	299.00	88.00	70.00	140.00	101.00
56	280	80.00	153.00	324.00	–	169.00	–	95.00	75.00	157.00	107.00

The grease quantity of "xxTAC20(29)x(D)" should be the same as the double row cylindrical roller bearing's, which is assembled with this bearing together.
For bore diameters larger than 280mm, please contact NSK.

HIGH SPEED SUPER PRECISION ANGULAR CONTACT BALL BEARINGS: BER SERIES - ROBUST (STEEL BALL)

25^0 CONTACT ANGLE

Bearing Number	Basic Bearing Dimensions						Preferred Shoulder Dimensions									
	d		D		B		d_a min		D_a max		*D_b max		r_a max		**r_b max	
	mm	inch	mm	inch	mm	inch	mm	inch	mm	inch	mm	inch	mm	inch	mm	inch
30BER10S	30	1.1811	55	2.1654	13	0.5118	36	1.417	49	1.929	50	1.969	1	0.039	0.5	0.019
35BER10S	35	1.3780	62	2.4409	14	0.5512	41	1.614	56	2.205	57	2.244	1	0.039	0.5	0.019
40BER10S	40	1.5748	68	2.6772	15	0.5906	46	1.811	62	2.441	63	2.480	1	0.039	0.5	0.019
45BER10S	45	1.7717	75	2.9528	16	0.6299	51	2.008	69	2.717	70	2.756	1	0.039	0.5	0.019
50BER10S	50	1.9685	80	3.1496	16	0.6299	56	2.205	74	2.913	75	2.953	1	0.039	0.5	0.019
55BER10S	55	2.1654	90	3.5433	18	0.7087	62	2.441	83	3.268	85	3.346	1	0.039	0.6	0.023
60BER10S	60	2.3622	95	3.7402	18	0.7087	67	2.638	88	3.465	90	3.543	1	0.039	0.6	0.023
65BER10S	65	2.5591	100	3.9370	18	0.7087	72	2.835	93	3.661	95	3.740	1	0.039	0.6	0.023
70BER10S	70	2.7559	110	4.3307	20	0.7874	77	3.031	103	4.055	105	4.134	1	0.039	0.6	0.023
75BER10S	75	2.9528	115	4.5276	20	0.7874	82	3.228	108	4.252	110	4.331	1	0.039	0.6	0.023
80BER10S	80	3.1496	125	4.9213	22	0.8661	87	3.425	118	4.646	120	4.724	1	0.039	0.6	0.023
85BER10S	85	3.3465	130	5.1181	22	0.8661	92	3.622	123	4.843	125	4.921	1	0.039	0.6	0.023
90BER10S	90	3.5433	140	5.5118	24	0.9449	99	3.898	131	5.157	134	5.276	1.5	0.059	0.8	0.031
95BER10S	95	3.7402	145	5.7087	24	0.9449	104	4.094	136	5.354	139	5.472	1.5	0.059	0.8	0.031
100BER10S	100	3.9370	150	5.9055	24	0.9449	109	4.291	141	5.551	144	5.669	1.5	0.059	0.8	0.031

*D_b is housing diameter for low shoulder. **r_b is housing fillet radius for low shoulder.

For application limiting speed, please refer to page H-2.

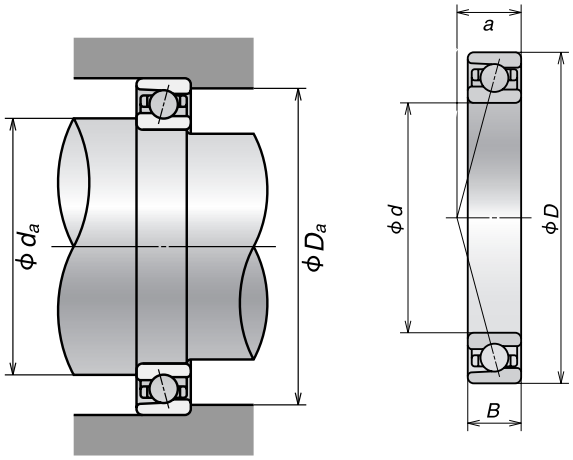

COMMON OPTIONS	
TR	Phenolic Cage
TYN	Polyamide Cage
DU	Duplex Universal
SU	Single Universal
EL	Extra Light Preload
L	Light Preload
M	Medium Preload
P4	ISO 4 (ABEC 7) Precision
P4Y	NSK Exclusive P4 Accuracy
V1V	Non-contacting Seal

Bearing Number	Basic Load Ratings				Limiting Speed Single or Tandem (RPM)		Bearing Weight (Approx.)		Preload Value (EL)		Sealed Design Available
	C_r		C_{or}								
	N	lbs	N	lbs	Grease	Oil	kg	lbs	N	lbs	
30BER10S	8300	1870	5500	1240	28300	40000	0.124	0.273	50	11.24	*
35BER10S	9700	2180	6850	1540	24800	35100	0.164	0.361	50	11.24	*
40BER10S	10100	2280	7650	1720	22300	31500	0.204	0.449	50	11.24	*
45BER10S	11200	2510	8600	1940	26700	41700	0.259	0.570	50	11.24	*
50BER10S	11600	2620	9500	2140	18500	26200	0.281	0.618	50	11.24	*
55BER10S	14400	3250	12000	2700	16600	23500	0.414	0.911	50	11.24	*
60BER10S	15000	3350	13100	2950	15500	22000	0.443	0.975	50	11.24	*
65BER10S	15500	3500	14200	3200	14600	20700	0.472	1.038	50	11.24	*
70BER10S	21300	4800	18900	4250	13400	18900	0.645	1.419	50	11.24	*
75BER10S	21600	4850	19800	4450	12700	17900	0.679	1.494	50	11.24	*
80BER10S	25300	5700	23500	5300	11800	16600	0.921	2.026	100	22.48	*
85BER10S	25600	5750	24600	5550	11200	15900	0.962	2.116	100	22.48	*
90BER10S	33500	7550	31500	7150	10500	14800	1.241	2.730	100	22.48	*
95BER10S	34000	7650	33000	7450	10000	14200	1.298	2.856	100	22.48	*
100BER10S	34500	7750	34500	7750	9600	13600	1.245	2.739	100	22.48	*

C_r = Dynamic Radial Load Rating C_{or} = Static Radial Load Rating

HIGH SPEED SUPER PRECISION ANGULAR CONTACT BALL BEARINGS: BER SERIES - ROBUST (CERAMIC BALL)

25^0 CONTACT ANGLE

Bearing Number	Basic Bearing Dimensions						Preferred Shoulder Dimensions									
	d		D		B		d_a min		D_a max		*D_b max		r_a max		**r_b max	
	mm	inch	mm	inch	mm	inch	mm	inch	mm	inch	mm	inch	mm	inch	mm	inch
30BER10H	30	1.1811	55	2.1654	13	0.5118	36	1.417	49	1.929	50	1.969	1.0	0.039	0.5	0.019
35BER10H	35	1.3780	62	2.4409	14	0.5512	41	1.614	56	2.205	57	2.244	1.0	0.039	0.5	0.019
40BER10H	40	1.5748	68	2.6772	15	0.5906	46	1.811	62	2.441	63	2.480	1.0	0.039	0.5	0.019
45BER10H	45	1.7717	75	2.9528	16	0.6299	51	2.008	69	2.717	70	2.756	1.0	0.039	0.5	0.019
50BER10H	50	1.9685	80	3.1496	16	0.6299	56	2.205	74	2.913	75	2.953	1.0	0.039	0.5	0.019
55BER10H	55	2.1654	90	3.5433	18	0.7087	62	2.441	83	3.268	85	3.346	1.0	0.039	0.6	0.023
60BER10H	60	2.3622	95	3.7402	18	0.7087	67	2.638	88	3.465	90	3.543	1.0	0.039	0.6	0.023
65BER10H	65	2.5591	100	3.9370	18	0.7087	72	2.835	93	3.661	95	3.740	1.0	0.039	0.6	0.023
70BER10H	70	2.7559	110	4.3307	20	0.7874	77	3.031	103	4.055	105	4.134	1.0	0.039	0.6	0.023
75BER10H	75	2.9528	115	4.5276	20	0.7874	82	3.228	108	4.252	110	4.331	1.0	0.039	0.6	0.023
80BER10H	80	3.1496	125	4.9213	22	0.8661	87	3.425	118	4.646	120	4.724	1.0	0.039	0.6	0.023
85BER10H	85	3.3465	130	5.1181	22	0.8661	92	3.622	123	4.843	125	4.921	1.0	0.039	0.6	0.023
90BER10H	90	3.5433	140	5.5118	24	0.9449	99	3.898	131	5.157	134	5.276	1.5	0.059	0.8	0.031
95BER10H	95	3.7402	145	5.7087	24	0.9449	104	4.094	136	5.354	139	5.472	1.5	0.059	0.8	0.031
100BER10H	100	3.9370	150	5.9055	24	0.9449	109	4.291	141	5.551	144	5.669	1.5	0.059	0.8	0.031

*D_b is housing diameter for low shoulder. **r_b is housing fillet radius for low shoulder.

For application limiting speed, please refer to page H-2.

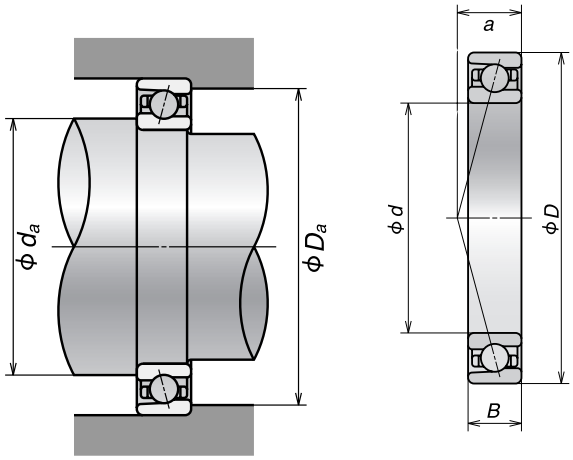

COMMON OPTIONS	
TR	Phenolic Cage
TYN	Polyamide Cage
DU	Duplex Universal
SU	Single Universal
EL	Extra Light Preload
L	Light Preload
M	Medium Preload
P4	ISO 4 (ABEC 7) Precision
P4Y	NSK Exclusive P4 Accuracy
V1V	Non-contacting Seal

Bearing Number	Basic Load Ratings				Limiting Speed Single or Tandem (RPM)		Bearing Weight (Approx.)		Preload Value (EL)		Sealed Design Available
	C_r		C_{or}								
	N	lbs	N	lbs	Grease	Oil	kg	lbs	N	lbs	
30BER10H	8300	1870	5500	1240	37700	58900	0.116	0.255	50	11.24	*
35BER10H	9700	2180	6850	1540	33000	51600	0.154	0.339	50	11.24	*
40BER10H	10100	2280	7650	1720	29700	46300	0.193	0.425	50	11.24	*
45BER10H	11200	2510	8600	1940	26700	41700	0.246	0.541	50	11.24	*
50BER10H	11600	2620	9500	2140	24700	38500	0.266	0.585	50	11.24	*
55BER10H	14400	3250	12000	2700	22100	34500	0.393	0.865	50	11.24	*
60BER10H	15000	3350	13100	2950	20700	32300	0.419	0.922	50	11.24	*
65BER10H	15500	3500	14200	3200	19400	30400	0.447	0.983	50	11.24	*
70BER10H	21300	4800	18900	4250	17800	27800	0.605	1.331	50	11.24	*
75BER10H	21600	4850	19800	4450	16900	26400	0.638	1.404	50	11.24	*
80BER10H	25300	5700	23500	5300	15700	24400	0.867	1.907	100	22.48	*
85BER10H	25600	5750	24600	5550	14900	23300	0.906	1.993	100	22.48	*
90BER10H	33500	7550	31500	7150	14000	21800	1.155	2.541	100	22.48	*
95BER10H	34000	7650	33000	7450	13400	20900	1.209	2.660	100	22.48	*
100BER10H	34500	7750	34500	7750	12800	20000	1.253	2.757	100	22.48	*

C_r = Dynamic Radial Load Rating C_{or} = Static Radial Load Rating

HIGH SPEED SUPER PRECISION ANGULAR CONTACT BALL BEARINGS: BER SERIES - ROBUST (STEEL BALL)

25^0 CONTACT ANGLE

Bearing Number	Basic Bearing Dimensions						Preferred Shoulder Dimensions									
	d		D		B		d_a min		D_a max		*D_b max		r_a max		**r_b max	
	mm	inch	mm	inch	mm	inch	mm	inch	mm	inch	mm	inch	mm	inch	mm	inch
30BER19S	30	1.1811	47	1.8504	9	0.3543	32.5	1.280	44.5	1.752	45.8	1.803	0.3	0.011	0.15	0.005
35BER19S	35	1.3780	55	2.1654	10	0.3937	40	1.575	50	1.969	52.5	2.067	0.6	0.023	0.3	0.011
40BER19S	40	1.5748	62	2.4409	12	0.4724	45	1.772	57	2.244	59.5	2.343	0.6	0.023	0.3	0.011
45BER19S	45	1.7717	68	2.6772	12	0.4724	50	1.969	63	2.480	65.5	2.579	0.6	0.023	0.3	0.011
50BER19S	50	1.9685	72	2.8346	12	0.4724	55	2.165	67	2.638	69.5	2.736	0.6	0.023	0.3	0.011
55BER19S	55	2.1654	80	3.1496	13	0.5118	61	2.402	74	2.913	75	2.953	1	0.039	0.5	0.019
60BER19S	60	2.3622	85	3.3465	13	0.5118	66	2.598	79	3.110	80	3.150	1	0.039	0.5	0.019
65BER19S	65	2.5591	90	3.5433	13	0.5118	71	2.795	84	3.307	85	3.346	1	0.039	0.5	0.019
70BER19S	70	2.7559	100	3.9370	16	0.6299	76	2.992	94	3.701	95	3.740	1	0.039	0.5	0.019
75BER19S	75	2.9528	105	4.1339	16	0.6299	81	3.189	99	3.898	100	3.937	1	0.039	0.5	0.019
80BER19S	80	3.1496	110	4.3307	16	0.6299	86	3.386	104	4.094	105	4.134	1	0.039	0.5	0.019
85BER19S	85	3.3465	120	4.7244	18	0.7087	92	3.622	113	4.449	115	4.528	1	0.039	0.6	0.023
90BER19S	90	3.5433	125	4.9213	18	0.7087	97	3.819	118	4.646	120	4.724	1	0.039	0.6	0.023
95BER19S	95	3.7402	130	5.1181	18	0.7087	102	4.016	123	4.843	125	4.921	1	0.039	0.6	0.023
100BER19S	100	3.9370	140	5.5118	20	0.7874	107	4.213	133	5.236	135	5.315	1	0.039	0.6	0.023

*D_b is housing diameter for low shoulder. **r_b is housing fillet radius for low shoulder.

For application limiting speed, please refer to page H-2.

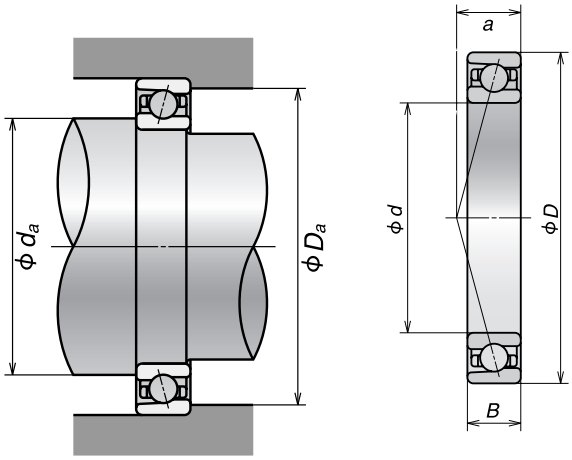

COMMON OPTIONS	
TR	Phenolic Cage
TYN	Polyamide Cage
DU	Duplex Universal
SU	Single Universal
EL	Extra Light Preload
L	Light Preload
M	Medium Preload
P4	ISO 4 (ABEC 7) Precision
P4Y	NSK Exclusive P4 Accuracy
V1V	Non-contacting Seal

Bearing Number	Basic Load Ratings				Limiting Speed Single or Tandem (RPM)		Bearing Weight (Approx.)		Preload Value (EL)		Sealed Design Available
	C_r		C_{or}								
	N	lbs	N	lbs	Grease	Oil	kg	lbs	N	lbs	
30BER19S	6000	1350	3900	880	31200	44200	0.048	0.106	50	11.24	*
35BER19S	8800	1980	5750	1290	26700	37800	0.072	0.158	50	11.24	*
40BER19S	11000	2470	7350	1650	23600	33400	0.105	0.231	50	11.24	*
45BER19S	11600	2620	8350	1880	21300	30100	0.125	0.275	50	11.24	*
50BER19S	12300	2750	9350	2100	19700	27900	0.127	0.279	50	11.24	*
55BER19S	13800	3100	10900	2450	17800	25200	0.178	0.392	50	11.24	*
60BER19S	14000	3150	11500	2590	16600	23500	0.190	0.418	50	11.24	*
65BER19S	14500	3250	12600	2840	15500	22000	0.204	0.449	50	11.24	*
70BER19S	20400	4600	17300	3900	14200	20000	0.328	0.722	50	11.24	*
75BER19S	20700	4650	18200	4090	13400	18900	0.348	0.766	50	11.24	*
80BER19S	21000	4700	19100	4300	12700	17900	0.366	0.805	100	11.24	*
85BER19S	28100	6320	25200	5660	11800	16600	0.527	1.16	100	11.24	*
90BER19S	30000	6750	28500	6400	11200	15900	0.552	1.21	100	22.48	*
95BER19S	30500	6860	29700	6680	10700	15200	0.571	1.26	100	22.48	*
100BER19S	36000	8150	33500	7500	10000	14200	0.770	1.69	100	22.48	*

C_r = Dynamic Radial Load Rating C_{or} = Static Radial Load Rating

HIGH SPEED SUPER PRECISION ANGULAR CONTACT BALL BEARINGS: BER SERIES - ROBUST (CERAMIC BALL)

25^0 CONTACT ANGLE

Bearing Number	Basic Bearing Dimensions						Preferred Shoulder Dimensions									
	d		D		B		d_a min		D_a max		*D_b max		r_a max		**r_b max	
	mm	inch	mm	inch	mm	inch	mm	inch	mm	inch	mm	inch	mm	inch	mm	inch
30BER19H	30	1.1811	47	1.8504	9	0.3543	32.5	1.280	44.5	1.752	45.8	1.803	0.3	0.011	0.15	0.005
35BER19H	35	1.3780	55	2.1654	10	0.3937	40	1.575	50	1.969	52.5	2.067	0.6	0.023	0.3	0.011
40BER19H	40	1.5748	62	2.4409	12	0.4724	45	1.772	57	2.244	59.5	2.343	0.6	0.023	0.3	0.011
45BER19H	45	1.7717	68	2.6772	12	0.4724	50	1.969	63	2.480	65.5	2.579	0.6	0.023	0.3	0.011
50BER19H	50	1.9685	72	2.8346	12	0.4724	55	2.165	67	2.638	69.5	2.736	0.6	0.023	0.3	0.011
55BER19H	55	2.1654	80	3.1496	13	0.5118	61	2.402	74	2.913	75	2.953	1	0.039	0.5	0.019
60BER19H	60	2.3622	85	3.3465	13	0.5118	66	2.598	79	3.110	80	3.150	1	0.039	0.5	0.019
65BER19H	65	2.5591	90	3.5433	13	0.5118	71	2.795	84	3.307	85	3.346	1	0.039	0.5	0.019
70BER19H	70	2.7559	100	3.9370	16	0.6299	76	2.992	94	3.701	95	3.740	1	0.039	0.5	0.019
75BER19H	75	2.9528	105	4.1339	16	0.6299	81	3.189	99	3.898	100	3.937	1	0.039	0.5	0.019
80BER19H	80	3.1496	110	4.3307	16	0.6299	86	3.386	104	4.094	105	4.134	1	0.039	0.5	0.019
85BER19H	85	3.3465	120	4.7244	18	0.7087	92	3.622	113	4.449	115	4.528	1	0.039	0.6	0.023
90BER19H	90	3.5433	125	4.9213	18	0.7087	97	3.819	118	4.646	120	4.724	1	0.039	0.6	0.023
95BER19H	95	3.7402	130	5.1181	18	0.7087	102	4.016	123	4.843	125	4.921	1	0.039	0.6	0.023
100BER19H	100	3.9370	140	5.5118	20	0.7874	107	4.213	133	5.236	135	5.315	1	0.039	0.6	0.023

*D_b is housing diameter for low shoulder. **r_b is housing fillet radius for low shoulder.

For application limiting speed, please refer to page H-2.

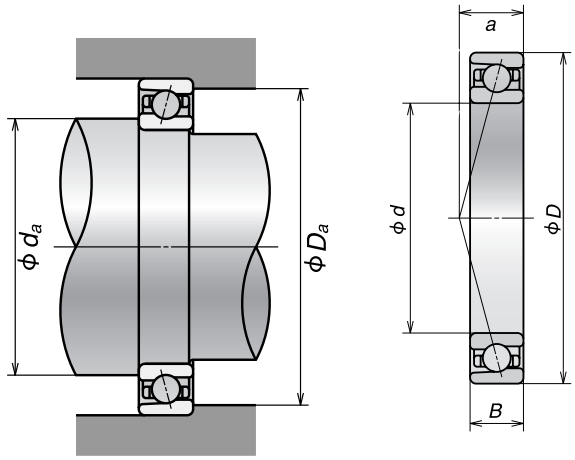

COMMON OPTIONS	
TR	Phenolic Cage
TYN	Polyamide Cage
DU	Duplex Universal
SU	Single Universal
EL	Extra Light Preload
L	Light Preload
M	Medium Preload
P4	ISO 4 (ABEC 7) Precision
P4Y	NSK Exclusive P4 Accuracy
V1V	Non-contacting Seal

Bearing Number	Basic Load Ratings				Limiting Speed Single or Tandem (RPM)		Bearing Weight (Approx.)		Preload Value (EL)		Sealed Design Available
	C_r		C_{or}								
	N	lbs	N	lbs	Grease	Oil	kg	lbs	N	lbs	
30BER19H	6000	1350	3900	880	41600	65000	0.043	0.095	50	11.24	*
35BER19H	8800	1980	5750	1290	35600	55600	0.063	0.139	50	11.24	*
40BER19H	11000	2470	7350	1650	31400	49100	0.092	0.202	50	11.24	*
45BER19H	11600	2620	8350	1880	28400	44300	0.111	0.244	50	11.24	*
50BER19H	12300	2750	9350	2100	26300	41000	0.111	0.244	50	11.24	*
55BER19H	13800	3100	10900	2450	23800	37100	0.158	0.348	50	11.24	*
60BER19H	14000	3150	11500	2590	22100	34500	0.170	0.374	50	11.24	*
65BER19H	14500	3250	12600	2840	20700	32300	0.181	0.398	50	11.24	*
70BER19H	20400	4600	17300	3900	18900	29500	0.292	0.642	50	11.24	*
75BER19H	20700	4650	18200	4090	17800	27800	0.310	0.682	50	11.24	*
80BER19H	21000	4700	19100	4300	16900	26400	0.326	0.717	100	11.24	*
85BER19H	28100	6320	25200	5660	15700	24400	0.456	1.003	100	11.24	*
90BER19H	30000	6750	28500	6400	14900	23300	0.480	1.056	100	22.48	*
95BER19H	30500	6860	29700	6680	14300	22300	0.497	1.093	100	22.48	*
100BER19H	36000	8150	33500	7500	13400	20900	0.673	1.481	100	22.48	*

C_r = Dynamic Radial Load Rating C_{or} = Static Radial Load Rating

HIGH SPEED SUPER PRECISION ANGULAR CONTACT BALL BEARINGS: BNR SERIES - ROBUST (STEEL BALL)

18^0 CONTACT ANGLE

Bearing Number	Basic Bearing Dimensions						Preferred Shoulder Dimensions									
	d		D		B		d_a min		D_a max		*D_b max		r_a max		**r_b max	
	mm	inch	mm	inch	mm	inch	mm	inch	mm	inch	mm	inch	mm	inch	mm	inch
30BNR10S	30	1.1811	55	2.1654	13	0.5118	36	1.417	49	1.929	50	1.969	1.0	0.039	0.5	0.019
35BNR10S	35	1.3780	62	2.4409	14	0.5512	41	1.614	56	2.205	57	2.244	1.0	0.039	0.5	0.019
40BNR10S	40	1.5748	68	2.6772	15	0.5906	46	1.811	62	2.441	63	2.480	1.0	0.039	0.5	0.019
45BNR10S	45	1.7717	75	2.9528	16	0.6299	51	2.008	69	2.717	70	2.756	1.0	0.039	0.5	0.019
50BNR10S	50	1.9685	80	3.1496	16	0.6299	56	2.205	74	2.913	75	2.953	1.0	0.039	0.5	0.019
55BNR10S	55	2.1654	90	3.5433	18	0.7087	62	2.441	83	3.268	85	3.346	1.0	0.039	0.6	0.023
60BNR10S	60	2.3622	95	3.7402	18	0.7087	67	2.638	88	3.465	90	3.543	1.0	0.039	0.6	0.023
65BNR10S	65	2.5591	100	3.9370	18	0.7087	72	2.835	93	3.661	95	3.740	1.0	0.039	0.6	0.023
70BNR10S	70	2.7559	110	4.3307	20	0.7874	77	3.031	103	4.055	105	4.134	1.0	0.039	0.6	0.023
75BNR10S	75	2.9528	115	4.5276	20	0.7874	82	3.228	108	4.252	110	4.331	1.0	0.039	0.6	0.023
80BNR10S	80	3.1496	125	4.9213	22	0.8661	87	3.425	118	4.646	120	4.724	1.0	0.039	0.6	0.023
85BNR10S	85	3.3465	130	5.1181	22	0.8661	92	3.622	123	4.843	125	4.921	1.0	0.039	0.6	0.023
90BNR10S	90	3.5433	140	5.5118	24	0.9449	99	3.898	131	5.157	134	5.276	1.5	0.059	0.8	0.031
95BNR10S	95	3.7402	145	5.7087	24	0.9449	104	4.094	136	5.354	139	5.472	1.5	0.059	0.8	0.031
100BNR10S	100	3.9370	150	5.9055	24	0.9449	109	4.291	141	5.551	144	5.669	1.5	0.059	0.8	0.031

*D_b is housing diameter for low shoulder. **r_b is housing fillet radius for low shoulder.

For application limiting speed, please refer to page H-2.

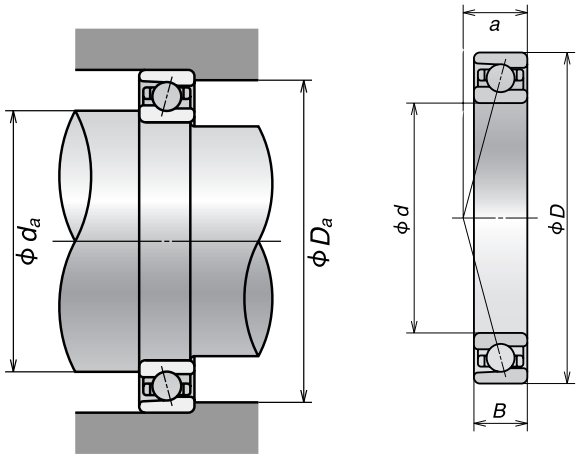

COMMON OPTIONS	
TR	Phenolic Cage
TYN	Polyamide Cage
DU	Duplex Universal
SU	Single Universal
EL	Extra Light Preload
L	Light Preload
M	Medium Preload
P4	ISO 4 (ABEC 7) Precision
P4Y	NSK Exclusive P4 Accuracy
V1V	Non-contacting Seal

Bearing Number	Basic Load Ratings				Limiting Speed Single or Tandem (RPM)		Bearing Weight (Approx.)		Preload Value (EL)		Sealed Design Available
	C_r		C_{or}								
	N	lbs	N	lbs	Grease	Oil	kg	lbs	N	lbs	
30BNR10S	8650	1950	5750	1290	33000	47100	0.124	0.273	50	11.24	*
35BNR10S	10100	2280	7100	1600	28900	41300	0.164	0.361	50	11.24	*
40BNR10S	10600	2380	7950	1790	26000	37100	0.204	0.449	50	11.24	*
45BNR10S	11700	2630	9000	2020	23400	33400	0.259	0.570	50	11.24	*
50BNR10S	12200	2740	9900	2230	21600	30800	0.281	0.618	50	11.24	*
55BNR10S	15100	3400	12500	2810	19400	27600	0.414	0.911	50	11.24	*
60BNR10S	15600	3500	13700	3050	18100	25900	0.443	0.975	50	11.24	*
65BNR10S	16200	3650	14800	3350	17000	24300	0.472	1.038	50	11.24	*
70BNR10S	22300	5000	19800	4450	15600	22300	0.645	1.419	50	11.24	*
75BNR10S	22600	5100	20700	4650	14800	21100	0.679	1.494	50	11.24	*
80BNR10S	26500	5950	24500	5500	13700	19600	0.921	2.026	100	22.48	*
85BNR10S	26800	6000	25700	5750	13100	18700	0.962	2.116	100	22.48	*
90BNR10S	35000	7900	33000	7450	12200	17400	1.241	2.730	100	22.48	*
95BNR10S	35500	8000	34500	7750	11700	16700	1.298	2.856	100	22.48	*
100BNR10S	36000	8100	36000	8100	11200	16000	1.245	2.739	100	22.48	*

C_r = Dynamic Radial Load Rating C_{or} = Static Radial Load Rating

HIGH SPEED SUPER PRECISION ANGULAR CONTACT BALL BEARINGS: BNR SERIES - ROBUST (CERAMIC BALL)

18^0 CONTACT ANGLE

Bearing Number	Basic Bearing Dimensions						Preferred Shoulder Dimensions									
	d		D		B		d_a min		D_a max		*D_b max		r_a max		**r_b max	
	mm	inch	mm	inch	mm	inch	mm	inch	mm	inch	mm	inch	mm	inch	mm	inch
30BNR10H	30	1.1811	55	2.1654	13	0.5118	36	1.417	49	1.929	50	1.969	1.0	0.039	0.5	0.019
35BNR10H	35	1.3780	62	2.4409	14	0.5512	41	1.614	56	2.205	57	2.244	1.0	0.039	0.5	0.019
40BNR10H	40	1.5748	68	2.6772	15	0.5906	46	1.811	62	2.441	63	2.480	1.0	0.039	0.5	0.019
45BNR10H	45	1.7717	75	2.9528	16	0.6299	51	2.008	69	2.717	70	2.756	1.0	0.039	0.5	0.019
50BNR10H	50	1.9685	80	3.1496	16	0.6299	56	2.205	74	2.913	75	2.953	1.0	0.039	0.5	0.019
55BNR10H	55	2.1654	90	3.5433	18	0.7087	62	2.441	83	3.268	85	3.346	1.0	0.039	0.6	0.023
60BNR10H	60	2.3622	95	3.7402	18	0.7087	67	2.638	88	3.465	90	3.543	1.0	0.039	0.6	0.023
65BNR10H	65	2.5591	100	3.9370	18	0.7087	72	2.835	93	3.661	95	3.740	1.0	0.039	0.6	0.023
70BNR10H	70	2.7559	110	4.3307	20	0.7874	77	3.031	103	4.055	105	4.134	1.0	0.039	0.6	0.023
75BNR10H	75	2.9528	115	4.5276	20	0.7874	82	3.228	108	4.252	110	4.331	1.0	0.039	0.6	0.023
80BNR10H	80	3.1496	125	4.9213	22	0.8661	87	3.425	118	4.646	120	4.724	1.0	0.039	0.6	0.023
85BNR10H	85	3.3465	130	5.1181	22	0.8661	92	3.622	123	4.843	125	4.921	1.0	0.039	0.6	0.023
90BNR10H	90	3.5433	140	5.5118	24	0.9449	99	3.898	131	5.157	134	5.276	1.5	0.059	0.8	0.031
95BNR10H	95	3.7402	145	5.7087	24	0.9449	104	4.094	136	5.354	139	5.472	1.5	0.059	0.8	0.031
100BNR10H	100	3.9370	150	5.9055	24	0.9449	109	4.291	141	5.551	144	5.669	1.5	0.059	0.8	0.031

*D_b is housing diameter for low shoulder. **r_b is housing fillet radius for low shoulder.

For application limiting speed, please refer to page H-2.

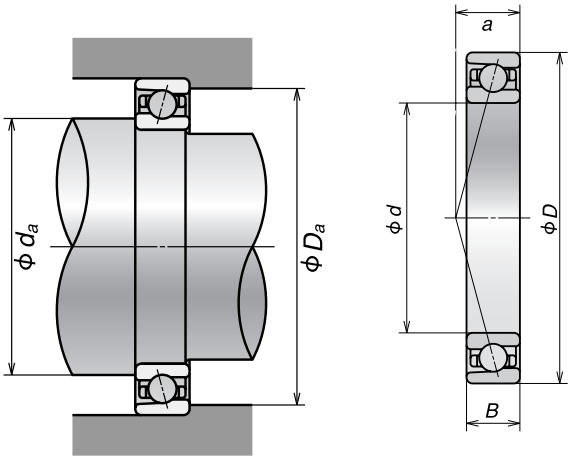

COMMON OPTIONS	
TR	Phenolic Cage
TYN	Polyamide Cage
DU	Duplex Universal
SU	Single Universal
EL	Extra Light Preload
L	Light Preload
M	Medium Preload
P4	ISO 4 (ABEC 7) Precision
P4Y	NSK Exclusive P4 Accuracy
V1V	Non-contacting Seal

Bearing Number	Basic Load Ratings				Limiting Speed Single or Tandem (RPM)		Bearing Weight (Approx.)		Preload Value (EL)		Sealed Design Available
	C_r		C_{or}								
	N	lbs	N	lbs	Grease	Oil	kg	lbs	N	lbs	
30BNR10H	8650	1950	5750	1290	42400	65900	0.116	0.255	50	11.24	*
35BNR10H	10100	2280	7100	1600	37200	57800	0.154	0.339	50	11.24	*
40BNR10H	10600	2380	7950	1790	33400	51900	0.193	0.425	50	11.24	*
45BNR10H	11700	2630	9000	2020	30000	46700	0.246	0.541	50	11.24	*
50BNR10H	12200	2740	9900	2230	27700	43100	0.266	0.585	50	11.24	*
55BNR10H	15100	3400	12500	2810	24900	38700	0.393	0.865	50	11.24	*
60BNR10H	15600	3500	13700	3050	23300	36200	0.419	0.922	50	11.24	*
65BNR10H	16200	3650	14800	3350	21900	34000	0.447	0.983	50	11.24	*
70BNR10H	22300	5000	19800	4450	20000	31200	0.605	1.331	50	11.24	*
75BNR10H	22600	5100	20700	4650	19000	29500	0.638	1.404	50	11.24	*
80BNR10H	26500	5950	24500	5500	17600	27400	0.867	1.907	100	22.48	*
85BNR10H	26800	6000	25700	5750	16800	26100	0.906	1.993	100	22.48	*
90BNR10H	35000	7900	33000	7450	15700	24400	1.155	2.541	100	22.48	*
95BNR10H	35500	8000	34500	7750	15000	23400	1.209	2.660	100	22.48	*
100BNR10H	36000	8100	36000	8100	14400	22400	1.253	2.757	100	22.48	*

C_r = Dynamic Radial Load Rating C_{or} = Static Radial Load Rating

HIGH SPEED SUPER PRECISION ANGULAR CONTACT BALL BEARINGS: BNR SERIES - ROBUST (STEEL BALL)

18^0 CONTACT ANGLE

Bearing Number	Basic Bearing Dimensions						Preferred Shoulder Dimensions									
	d		D		B		d_a min		D_a max		*D_b max		r_a max		**r_b max	
	mm	inch	mm	inch	mm	inch	mm	inch	mm	inch	mm	inch	mm	inch	mm	inch
30BNR19S	30	1.1811	47	1.8504	9	0.3543	32.5	1.280	44.5	1.752	45.8	1.803	0.3	0.011	0.15	0.005
35BNR19S	35	1.3780	55	2.1654	10	0.3937	40	1.575	50	1.969	52.5	2.067	0.6	0.023	0.3	0.011
40BNR19S	40	1.5748	62	2.4409	12	0.4724	45	1.772	57	2.244	59.5	2.343	0.6	0.023	0.3	0.011
45BNR19S	45	1.7717	68	2.6772	12	0.4724	50	1.969	63	2.480	65.5	2.579	0.6	0.023	0.3	0.011
50BNR19S	50	1.9685	72	2.8346	12	0.4724	55	2.165	67	2.638	69.5	2.736	0.6	0.023	0.3	0.011
55BNR19S	55	2.1654	80	3.1496	13	0.5118	61	2.402	74	2.913	75	2.953	1	0.039	0.5	0.019
60BNR19S	60	2.3622	85	3.3465	13	0.5118	66	2.598	79	3.110	80	3.150	1	0.039	0.5	0.019
65BNR19S	65	2.5591	90	3.5433	13	0.5118	71	2.795	84	3.307	85	3.346	1	0.039	0.5	0.019
70BNR19S	70	2.7559	100	3.9370	16	0.6299	76	2.992	94	3.701	95	3.740	1	0.039	0.5	0.019
75BNR19S	75	2.9528	105	4.1339	16	0.6299	81	3.189	99	3.898	100	3.937	1	0.039	0.5	0.019
80BNR19S	80	3.1496	110	4.3307	16	0.6299	86	3.386	104	4.094	105	4.134	1	0.039	0.5	0.019
85BNR19S	85	3.3465	120	4.7244	18	0.7087	92	3.622	113	4.449	115	4.528	1	0.039	0.6	0.023
90BNR19S	90	3.5433	125	4.9213	18	0.7087	97	3.819	118	4.646	120	4.724	1	0.039	0.6	0.023
95BNR19S	95	3.7402	130	5.1181	18	0.7087	102	4.016	123	4.843	125	4.921	1	0.039	0.6	0.023
100BNR19S	100	3.9370	140	5.5118	20	0.7874	107	4.213	133	5.236	135	5.315	1	0.039	0.6	0.023

*D_b is housing diameter for low shoulder. **r_b is housing fillet radius for low shoulder.

For application limiting speed, please refer to page H-2.

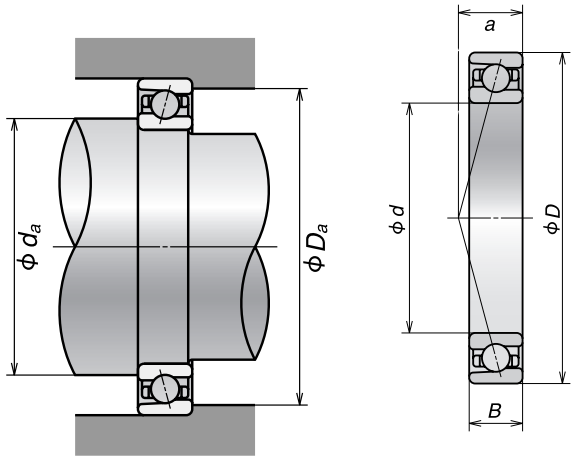

COMMON OPTIONS	
TR	Phenolic Cage
TYN	Polyamide Cage
DU	Duplex Universal
SU	Single Universal
EL	Extra Light Preload
L	Light Preload
M	Medium Preload
P4	ISO 4 (ABEC 7) Precision
P4Y	NSK Exclusive P4 Accuracy
V1V	Non-contacting Seal

Bearing Number	Basic Load Ratings				Limiting Speed Single or Tandem (RPM)		Bearing Weight (Approx.)		Preload Value (EL)		Sealed Design Available
	C_r		C_{or}								
	N	lbs	N	lbs	Grease	Oil	kg	lbs	N	lbs	
30BNR19S	6300	1410	4050	915	36400	52000	0.048	0.106	50	11.24	*
35BNR19S	9200	2060	6000	1340	31200	44500	0.072	0.158	50	11.24	*
40BNR19S	11500	2580	7650	1720	27500	39300	0.105	0.231	50	11.24	*
45BNR19S	12100	2730	8700	1960	24800	35400	0.125	0.275	50	11.24	*
50BNR19S	12800	2880	9750	2190	23000	32800	0.127	0.279	50	11.24	*
55BNR19S	14400	3250	11400	2560	20800	29700	0.178	0.392	50	11.24	*
60BNR19S	14600	3300	12000	2700	19400	27600	0.190	0.418	50	11.24	*
65BNR19S	15200	3400	13200	2960	18100	25900	0.204	0.449	50	11.24	*
70BNR19S	21300	4800	18100	4050	16500	23600	0.328	0.722	50	11.24	*
75BNR19S	21600	4850	19000	4250	15600	22300	0.348	0.766	50	11.24	*
80BNR19S	22000	4950	19900	4500	14800	21100	0.366	0.805	50	11.24	*
85BNR19S	29400	6600	26300	5900	13700	19600	0.527	1.16	50	11.24	*
90BNR19S	31500	7050	29700	6700	13100	18700	0.552	1.21	100	22.48	*
95BNR19S	32000	7150	31000	7000	12500	17800	0.571	1.26	100	22.48	*
100BNR19S	38000	8500	35000	7850	11700	16700	0.770	1.69	100	22.48	*

C_r = Dynamic Radial Load Rating C_{or} = Static Radial Load Rating

HIGH SPEED SUPER PRECISION ANGULAR CONTACT BALL BEARINGS: BNR SERIES - ROBUST (CERAMIC BALL)

18^0 CONTACT ANGLE

Bearing Number	Basic Bearing Dimensions						Preferred Shoulder Dimensions									
	d		D		B		d_a min		D_a max		*D_b max		r_a max		**r_b max	
	mm	inch	mm	inch	mm	inch	mm	inch	mm	inch	mm	inch	mm	inch	mm	inch
30BNR19H	30	1.1811	47	1.8504	9	0.3543	32.5	1.280	44.5	1.752	45.8	1.803	0.3	0.011	0.15	0.005
35BNR19H	35	1.3780	55	2.1654	10	0.3937	40	1.575	50	1.969	52.5	2.067	0.6	0.023	0.3	0.011
40BNR19H	40	1.5748	62	2.4409	12	0.4724	45	1.772	57	2.244	59.5	2.343	0.6	0.023	0.3	0.011
45BNR19H	45	1.7717	68	2.6772	12	0.4724	50	1.969	63	2.480	65.5	2.579	0.6	0.023	0.3	0.011
50BNR19H	50	1.9685	72	2.8346	12	0.4724	55	2.165	67	2.638	69.5	2.736	0.6	0.023	0.3	0.011
55BNR19H	55	2.1654	80	3.1496	13	0.5118	61	2.402	74	2.913	75	2.953	1	0.039	0.5	0.019
60BNR19H	60	2.3622	85	3.3465	13	0.5118	66	2.598	79	3.110	80	3.150	1	0.039	0.5	0.019
65BNR19H	65	2.5591	90	3.5433	13	0.5118	71	2.795	84	3.307	85	3.346	1	0.039	0.5	0.019
70BNR19H	70	2.7559	100	3.9370	16	0.6299	76	2.992	94	3.701	95	3.740	1	0.039	0.5	0.019
75BNR19H	75	2.9528	105	4.1339	16	0.6299	81	3.189	99	3.898	100	3.937	1	0.039	0.5	0.019
80BNR19H	80	3.1496	110	4.3307	16	0.6299	86	3.386	104	4.094	105	4.134	1	0.039	0.5	0.019
85BNR19H	85	3.3465	120	4.7244	18	0.7087	92	3.622	113	4.449	115	4.528	1	0.039	0.6	0.023
90BNR19H	90	3.5433	125	4.9213	18	0.7087	97	3.819	118	4.646	120	4.724	1	0.039	0.6	0.023
95BNR19H	95	3.7402	130	5.1181	18	0.7087	102	4.016	123	4.843	125	4.921	1	0.039	0.6	0.023
100BNR19H	100	3.9370	140	5.5118	20	0.7874	107	4.213	133	5.236	135	5.315	1	0.039	0.6	0.023

*D_b is housing diameter for low shoulder. **r_b is housing fillet radius for low shoulder.

For application limiting speed, please refer to page H-2.

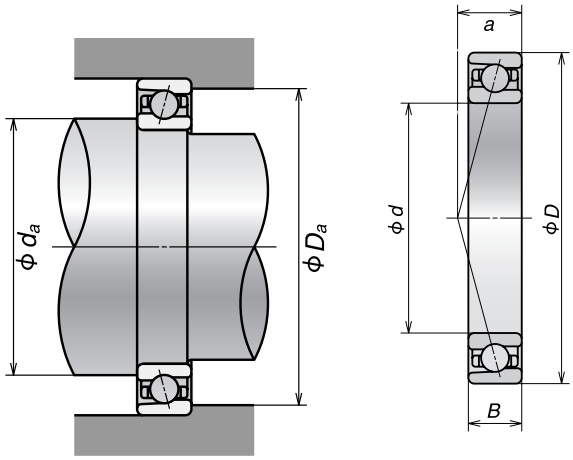

COMMON OPTIONS	
TR	Phenolic Cage
TYN	Polyamide Cage
DU	Duplex Universal
SU	Single Universal
EL	Extra Light Preload
L	Light Preload
M	Medium Preload
P4	ISO 4 (ABEC 7) Precision
P4Y	NSK Exclusive P4 Accuracy
V1V	Non-contacting Seal

Bearing Number	Basic Load Ratings				Limiting Speed Single or Tandem (RPM)		Bearing Weight (Approx.)		Preload Value (EL)		Sealed Design Available
	C_r		C_{or}								
	N	lbs	N	lbs	Grease	Oil	kg	lbs	N	lbs	
30BNR19H	6300	1410	4050	915	46800	72800	0.043	0.095	50	11.24	*
35BNR19H	9200	2060	6000	1340	40000	62300	0.063	0.139	50	11.24	*
40BNR19H	11500	2580	7650	1720	35300	55000	0.092	0.202	50	11.24	*
45BNR19H	12100	2730	8700	1960	31900	49600	0.111	0.244	50	11.24	*
50BNR19H	12800	2880	9750	2190	29600	46000	0.111	0.244	50	11.24	*
55BNR19H	14400	3250	11400	2560	26700	41500	0.158	0.348	50	11.24	*
60BNR19H	14600	3300	12000	2700	24900	38700	0.170	0.374	50	11.24	*
65BNR19H	15200	3400	13200	2960	23300	36200	0.181	0.398	50	11.24	*
70BNR19H	21300	4800	18100	4050	21200	33000	0.292	0.642	50	11.24	*
75BNR19H	21600	4850	19000	4250	20000	31200	0.310	0.682	50	11.24	*
80BNR19H	22000	4950	19900	4500	19000	29500	0.326	0.717	50	11.24	*
85BNR19H	29400	6600	26300	5900	17600	27400	0.456	1.003	50	11.24	*
90BNR19H	31500	7050	29700	6700	16800	26100	0.480	1.056	100	22.48	*
95BNR19H	32000	7150	31000	7000	16000	24900	0.497	1.093	100	22.48	*
100BNR19H	38000	8500	35000	7850	15000	23400	0.673	1.481	100	22.48	*

C_r = Dynamic Radial Load Rating C_{or} = Static Radial Load Rating

HIGH SPEED SUPER PRECISION ANGULAR CONTACT BALL BEARINGS: BSR SERIES - ROBUST (STEEL BALL)

15^0 CONTACT ANGLE

Bearing Number	Basic Bearing Dimensions						Preferred Shoulder Dimensions							
	d		D		B		d_a min		D_a max		r_a max		*r_b max	
	mm	inch	mm	inch	mm	inch	mm	inch	mm	inch	mm	inch	mm	inch
6BSR10S	6	0.2362	17	0.6693	6	0.2362	8.5	0.335	14.5	0.571	0.3	0.011	-	-
7BSR10S	7	0.2756	19	0.7480	6	0.2362	9.5	0.374	16.5	0.650	0.3	0.011	-	-
8BSR10S	8	0.3150	22	0.8661	7	0.2756	10.5	0.413	19.5	0.768	0.3	0.011	-	-
10BSR10S	10	0.3937	26	1.0236	8	0.3150	12.5	0.492	23.5	0.925	0.3	0.011	0.15	0.005
12BSR10S	12	0.4724	28	1.1024	8	0.3150	14.5	0.571	25.5	1.004	0.3	0.011	0.15	0.005
15BSR10S	15	0.5906	32	1.2598	9	0.3543	17.5	0.689	29.5	1.161	0.3	0.011	0.15	0.005
17BSR10S	17	0.6693	35	1.3780	10	0.3937	19.5	0.768	32.5	1.280	0.3	0.011	0.15	0.005
20BSR10S	20	0.7874	42	1.6535	12	0.4724	25	0.984	37	1.457	0.6	0.023	0.3	0.011
25BSR10S	25	0.9843	47	1.8504	12	0.4724	30	1.181	42	1.654	0.6	0.023	0.3	0.011

*r_b is housing fillet radius for low shoulder.

For application limiting speed, please refer to page H-2.

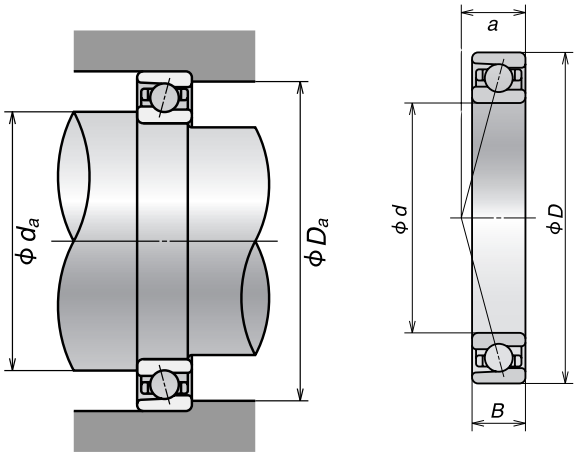

COMMON OPTIONS	
TR	Phenolic Cage
TYN	Polyamide Cage
DU	Duplex Universal
SU	Single Universal
EL	Extra Light Preload
L	Light Preload
M	Medium Preload
P2	IS0 2 (ABEC 9) Precision
P4	ISO 4 (ABEC 7) Precision

Bearing Number	Basic Load Ratings				Limiting Speed Single or Tandem (RPM)		Bearing Weight (Approx.)	
	C_r		C_{or}					
	N	lbs	N	lbs	Grease	Oil	kg	lbs
6BSR10S	1420	320	430	97	140000	192000	0.006	0.013
7BSR10S	1600	360	520	117	124000	170000	0.008	0.018
8BSR10S	2370	530	800	180	107000	147000	0.012	0.026
10BSR10S	3500	790	1270	286	88900	123000	0.019	0.042
12BSR10S	3850	865	1480	330	80000	110000	0.021	0.046
15BSR10S	4200	940	1720	385	68100	93700	0.029	0.064
17BSR10S	4450	1000	1930	435	61600	84700	0.038	0.084
20BSR10S	7450	1670	3350	750	51700	71000	0.066	0.145
25BSR10S	7900	1780	3750	845	44500	61200	0.076	0.167

C_r = Dynamic Radial Load Rating C_{or} = Static Radial Load Rating

HIGH SPEED SUPER PRECISION ANGULAR CONTACT BALL BEARINGS: BSR SERIES - ROBUST (CERAMIC BALL)

15^0 CONTACT ANGLE

Bearing Number	Basic Bearing Dimensions						Preferred Shoulder Dimensions							
	d		D		B		d_a min		D_a max		r_a max		*r_b max	
	mm	inch	mm	inch	mm	inch	mm	inch	mm	inch	mm	inch	mm	inch
6BSR10H	6	0.2362	17	0.6693	6	0.2362	8.5	0.335	14.5	0.571	0.3	0.011	-	-
7BSR10H	7	0.2756	19	0.7480	6	0.2362	9.5	0.374	16.5	0.650	0.3	0.011	-	-
8BSR10H	8	0.3150	22	0.8661	7	0.2756	10.5	0.413	19.5	0.768	0.3	0.011	-	-
10BSR10H	10	0.3937	26	1.0236	8	0.3150	12.5	0.492	23.5	0.925	0.3	0.011	0.15	0.005
12BSR10H	12	0.4724	28	1.1024	8	0.3150	14.5	0.571	25.5	1.004	0.3	0.011	0.15	0.005
15BSR10H	15	0.5906	32	1.2598	9	0.3543	17.5	0.689	29.5	1.161	0.3	0.011	0.15	0.005
17BSR10H	17	0.6693	35	1.3780	10	0.3937	19.5	0.768	32.5	1.280	0.3	0.011	0.15	0.005
20BSR10H	20	0.7874	42	1.6535	12	0.4724	25	0.984	37	1.457	0.6	0.023	0.3	0.011
25BSR10H	25	0.9843	47	1.8504	12	0.4724	30	1.181	42	1.654	0.6	0.023	0.3	0.011

*r_b is housing fillet radius for low shoulder.

For application limiting speed, please refer to page H-2.

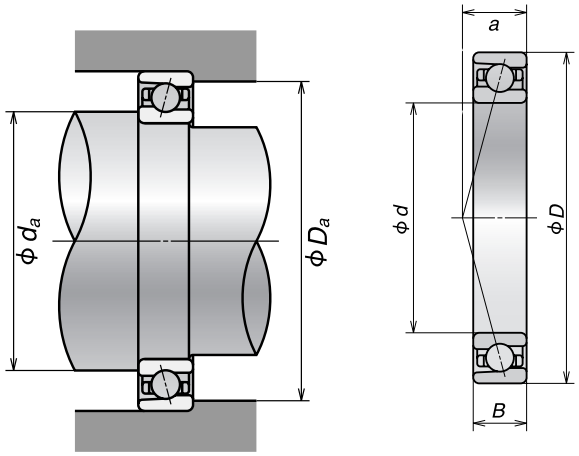

COMMON OPTIONS	
TR	Phenolic Cage
TYN	Polyamide Cage
DU	Duplex Universal
SU	Single Universal
EL	Extra Light Preload
L	Light Preload
M	Medium Preload
P2	ISO 2 (ABEC 9) Precision
P4	ISO 4 (ABEC 7) Precision

Bearing Number	Basic Load Ratings				Limiting Speed Single or Tandem (RPM)		Bearing Weight (Approx.)	
	C_r		C_{or}					
	N	lbs	N	lbs	Grease	Oil	kg	lbs
6BSR10H	1420	320	430	97	166000	244000	0.005	0.011
7BSR10H	1600	360	520	117	147000	216000	0.007	0.015
8BSR10H	2370	530	800	180	127000	187000	0.011	0.024
10BSR10H	3500	790	1270	286	106000	156000	0.016	0.035
12BSR10H	3850	865	1480	330	95000	140000	0.018	0.040
15BSR10H	4200	940	1720	385	80900	120000	0.026	0.057
17BSR10H	4450	1000	1930	435	73100	108000	0.035	0.077
20BSR10H	7450	1670	3350	750	61300	90400	0.059	0.130
25BSR10H	7900	1780	3750	845	52800	77800	0.068	0.150

C_r = Dynamic Radial Load Rating C_{or} = Static Radial Load Rating

SUPER PRECISION ANGULAR CONTACT THRUST BALL BEARINGS

Bearing Bore
Diameter (mm)

100

BAR

Bearing Type
BAR: 30º Contact Angle
BTR: 40º Contact Angle

Dimension Series
10: Arranged with NN30XX Series

10

S

Material
S: Steel Ball
H: Ceramic Ball
E: Steel Ball (Robust Series)

Retainer
TYN: Polyamide Cage

TYN

DB

Combination
DB: Back to Back Duplex

Preload
L: Standard Preload
EL: Extra Light Preload
CPxx: Special Preload
CAxx: Special Axial Clearance

L

P4A

Precision Class
P4A: ISO Class 4, O.D. is Special
P2A: ISO Class 2, O.D. is Special

Please refer to the bearing tables for exact part number options

INTERCHANGE

Description		Interchange			
		NSK	*OLD NSK	SKF	NTN
Part No.	30° Angular Contact Thrust Bearings	XXBAR10	XXBA10	BTMXXA	HTA0XXA
	40° Angular Contact Thrust Bearings	XXBTR10	XXBT10	BTMXXB	HTA0XX
Part Number Suffix	Polyamide Cage	TYN	TY	BLANK	T2
	Phenolic Cage	TR	T	-	BLANK
	Duplex Universal	DU	DU	DB	GD2
	Single Universal	SU	SU	-	G
	Extra Light Preload	EL	EL	-	-
	Light Preload	L	L	A	GN
	Ceramic Balls	H	SN24	HC	5S**
	Steel Balls	S/E	BLANK	BLANK	BLANK
	ABEC 7 Precision	P4A	P4A	PC	P4
	ABEC 9 Precision	P2A	P2A	PA9A	P2

*BAR and BTR series have replaced BA and BT series.
** Indicates prefix not suffix

The competitive manufacturers are provided for a convenient source of unit substitution. They can be considered interchangeable in most instances, but for special applications, please contact NSK. NSK assumes no liability with respect to errors or omissions.

APPLICATIONS

Super Precision Angular Contact Thrust bearings are designed to work together with high speed super precision cylindrical roller bearings where high speed, and high rigidity are required. Offered in a 30^0 and 40^0 series, this offering allows flexibility for meeting the rigidity requirements seen in many machine tool applications.

› **Lathes**

FEATURES

All of these bearings have special outside diameter tolerances (P4A and P2A) to provide clearance between the outer ring periphery and housing bore in order to avoid supporting radial loads.

SUPER PRECISION ANGULAR CONTACT THRUST BALL BEARINGS: BAR SERIES

30^0 CONTACT ANGLE

Part Number	Basic Bearing Dimensions					
	d		D*		B	
	mm	inch	mm	inch	mm	inch
60BAR10STYN	60	2.3622	95	3.7402	16.50	0.6496
65BAR10STYN	65	2.5591	100	3.9370	16.50	0.6496
70BAR10STYN	70	2.7559	110	4.3307	18.00	0.7087
75BAR10STYN	75	2.9528	115	4.5276	18.00	0.7087
80BAR10STYN	80	3.1496	125	4.9213	20.25	0.7972
85BAR10STYN	85	3.3465	130	5.1181	20.25	0.7972
90BAR10STYN	90	3.5433	140	5.5118	22.50	0.8858
95BAR10STYN	95	3.7402	145	5.7087	22.50	0.8858
100BAR10STYN	100	3.9370	150	5.9055	22.50	0.8858
105BAR10STYN	105	4.1339	160	6.2992	24.75	0.9744
110BAR10STYN	110	4.3307	170	6.6929	27.00	1.0630
120BAR10STYN	120	4.7244	180	7.0866	27.00	1.0630
130BAR10STYN	130	5.1181	200	7.8740	31.50	1.2402

* Special outer ring outside diameter tolerance (class P4A or P2A) to provide clearance between the outer ring periphery and housing bore in order to avoid support of radial loads.

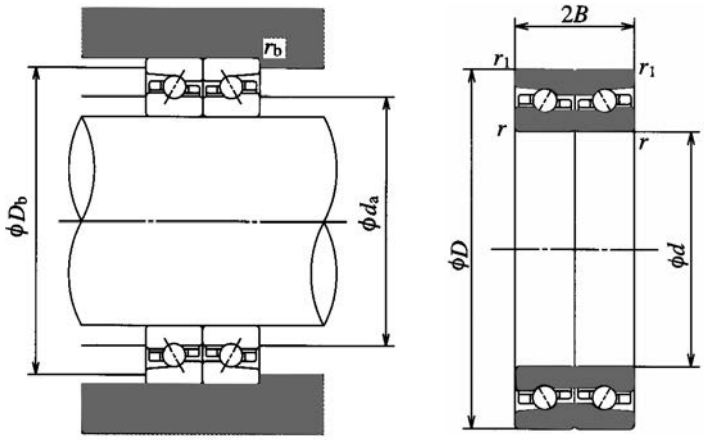

COMMON OPTIONS	
TYN	Polyamide Cage
DU	Duplex Universal
DB	Back to Back Duplex
EL	Extra Light Preload
L	Light Preload
M	Medium Preload
P4A	ISO 4 (ABEC 7) Precision - O.D. is Special
P2A	ISO 2 (ABEC 9) Precision - O.D. is Special

Part Number	Basic Load Ratings				Limiting Speed Duplex (RPM)		Bearing Weight (Approx.)		Preload Value Duplex (EL)		Axial Rigidity Duplex (EL)	
	C_r		C_{or}									
	N	lbs	N	lbs	Grease	Oil	kg	lbs	N	lbs	N/μm	lbs/.001 inch
60BAR10STYN	18900	4250	38000	8600	9700	12300	0.420	0.93	240	53.95	190	1084.9
65BAR10STYN	19500	4400	41500	9300	9100	11600	0.447	0.99	250	56.20	200	1142.0
70BAR10STYN	26900	6050	55000	12400	8400	10600	0.601	1.32	250	56.20	200	1142.0
75BAR10STYN	27300	6150	57500	13000	7900	10000	0.634	1.40	260	58.45	210	1199.1
80BAR10STYN	32000	7200	68500	15400	7400	9300	0.875	1.93	340	76.44	240	1370.4
85BAR10STYN	32500	7250	71500	16100	7000	8900	0.971	2.14	350	78.68	240	1370.4
90BAR10STYN	42500	9500	92500	20800	6600	8300	1.198	2.64	360	80.93	250	1427.5
95BAR10STYN	43000	9650	96500	21600	6300	8000	1.320	2.91	360	80.93	260	1484.6
100BAR10STYN	43500	9800	100000	22600	6000	7600	1.399	3.08	370	83.18	270	1541.7
105BAR10STYN	49500	11100	115000	25900	5700	7200	1.740	3.83	380	85.43	280	1598.8
110BAR10STYN	55500	12500	131000	29300	5400	6800	2.110	4.65	390	87.68	280	1598.8
120BAR10STYN	57000	12800	141000	31500	5000	6400	2.262	4.99	390	87.68	300	1713.0
130BAR10STYN	72500	16300	172000	38500	4600	5800	3.362	7.41	390	87.68	300	1713.0

C_r = Dynamic Radial Load Rating C_{or} = Static Radial Load Rating

SUPER PRECISION ANGULAR CONTACT THRUST BALL BEARINGS: BTR SERIES

40^0 CONTACT ANGLE

Part Number	Basic Bearing Dimensions					
	d		D*		B	
	mm	inch	mm	inch	mm	inch
60BTR10STYN	60	2.3622	95	3.7402	16.50	0.6496
65BTR10STYN	65	2.5591	100	3.9370	16.50	0.6496
70BTR10STYN	70	2.7559	110	4.3307	18.00	0.7087
75BTR10STYN	75	2.9528	115	4.5276	18.00	0.7087
80BTR10STYN	80	3.1496	125	4.9213	20.25	0.7972
85BTR10STYN	85	3.3465	130	5.1181	20.25	0.7972
90BTR10STYN	90	3.5433	140	5.5118	22.50	0.8858
95BTR10STYN	95	3.7402	145	5.7087	22.50	0.8858
100BTR10STYN	100	3.9370	150	5.9055	22.50	0.8858
105BTR10STYN	105	4.1339	160	6.2992	24.75	0.9744
110BTR10STYN	110	4.3307	170	6.6929	27.00	1.0630
120BTR10STYN	120	4.7244	180	7.0866	27.00	1.0630
130BTR10STYN	130	5.1181	200	7.8740	31.50	1.2402

* Special outer ring outside diameter tolerance (class P4A or P2A) to provide clearance between the outer ring periphery and housing bore in order to avoid support of radial loads.

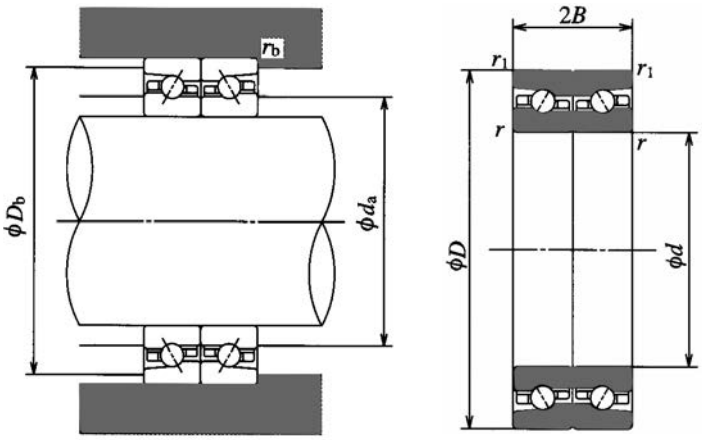

COMMON OPTIONS	
TYN	Polyamide Cage
DU	Duplex Universal
DB	Back to Back Duplex
EL	Extra Light Preload
L	Light Preload
M	Medium Preload
P4A	ISO 4 (ABEC 7) Precision - O.D. is Special
P2A	ISO 2 (ABEC 9) Precision - O.D. is Special

Part Number	Basic Load Ratings				Limiting Speed Duplex (RPM)		Bearing Weight (Approx.)		Preload Value Duplex (EL)		Axial Rigidity Duplex (EL)	
	C_r		C_{or}		Grease	Oil	kg	lbs	N	lbs	N/µm	lbs/.001 inch
	N	lbs	N	lbs								
60BTR10STYN	22400	5050	43500	9750	8 400	11 000	0.420	0.93	370	83.18	330	1884.3
65BTR10STYN	23100	5200	47000	10600	7 900	10 400	0.447	0.99	390	87.68	350	1998.5
70BTR10STYN	32000	7200	63000	14100	7 300	9 500	0.601	1.32	390	87.68	350	1998.5
75BTR10STYN	32500	7250	65500	14800	6 900	9 000	0.634	1.40	400	89.92	360	2055.6
80BTR10STYN	38000	8500	78000	17500	6 400	8 300	0.875	1.93	510	114.65	400	2284
85BTR10STYN	38500	8600	81500	18300	6 100	8 000	0.971	2.14	520	116.90	420	2398.2
90BTR10STYN	50000	11300	105000	23600	5 700	7 400	1.198	2.64	530	119.15	430	2455.3
95BTR10STYN	51000	11500	110000	24600	5 500	7 100	1.320	2.91	550	123.64	460	2569.5
100BTR10STYN	51500	11600	114000	25700	5 200	6 800	1.399	3.08	560	125.89	460	2626.6
105BTR10STYN	58500	13200	131000	29400	5 000	6 500	1.740	3.84	570	128.14	470	2683.7
110BTR10STYN	66000	14800	148000	33500	4 700	6 100	2.110	4.65	580	130.39	490	2797.9
120BTR10STYN	68000	15200	160000	36000	4 400	5 700	2.262	4.99	610	137.13	520	2969.2
130BTR10STYN	86000	19300	195000	44000	4 000	5 200	3.362	7.41	610	137.13	520	2969.2

C_r = Dynamic Radial Load Rating C_{or} = Static Radial Load Rating

SUPER PRECISION CYLINDRICAL ROLLER BEARINGS

DOUBLE ROW

Bearing Type
NN: Double Row Cylindrical Roller Bearing with Triple-Ribbed Inner Ring
NNU: Double Row Cylindrical Roller Bearing with Triple-Ribbed Outer Ring

Diameter Series
9: Extra Light
0: Light

Cage
T: Polyamide
TB: Roller Guided PPS Resin
MB: Roller Guided Machined Brass

Lubrication Holes
E44: Outer Ring with Machined Lubriction Groove and Lubrication Holes
Blank: No Lubrication Holes

Precision Class
P4: ISO Class 4 (ABEC7)
P2: ISO Class 2 (ABEC9)

NN **3** **0** **17** **MB** **KR** **E44** **CCO** **P4**

Dimension Series
1: Thin
3: Medium
4: Wide

Bore Number
Bearing Bore = Bore Number x5 (mm)

Tapered Bore
KR: 1/12 Tapered Bore
Blank: Cylindrical Bore

Radial Clearance
CC1: Standard Clearance for Cylindrical Bore
CCO: Standard Clearance for Tapered Bore
CCGxx*: Special Radial Clearance

* Median clearance in microns
Please refer to the bearing tables for exact part number options

SINGLE ROW

Bearing Type
N: Single Row Cylindrical Roller Bearing with Double-Ribbed Inner Ring

Diameter Series
0: Light

Type	Material	
	Rings	Rolling element
RS	Bearing Steel (SUJ2)	Bearing Steel (SUJ2)
RX	Heat Resistant Steel (SHX) to 300°C	Heat Resistant Steel (SHX) to 300°C

Tapered Bore
KR: 1/12 Tapered Bore
Blank: Cylindrical Bore

Precision Class
P4: ISO Class 4 (ABEC7)
P2: ISO Class 2 (ABEC9)

N **1** **0** **12** **RX** **TP** **KR** **CCO** **P4**

Dimension Series
1: Thin

Bore Number
Bearing Bore = Bore Number x5 (mm)

Cage
TP: Outer Ring Guided PEEK Resin
MR: Roller Guided Machined Brass
BT: Polyamide
Blank: Machined Brass

Radial Clearance
CC1: Standard Clearance for Cylindrical Bore
CCO: Standard Clearance for Tapered Bore
CCGxx*: Special Radial Clearance

* Median clearance in microns
Please refer to the bearing tables for exact part number options

INTERCHANGE

Description		Interchange				
		NSK	*OLD NSK	SKF	FAG	NTN
Part No.	Ultra Light Double Row Cylindrical Series	NN39XX	NN39XX	-	-	-
	Extra Light Double Row Cylindrical Series	NN30XX	NN30XX	NN30XX	NN30XX	NN30XX
	Extra Light Single Row Cylindrical Series	N10XX	N10XX	N10XX	N10XX	N10XX
Part Number Suffix	Non-Metallic Cage	TB	T	TN,TN9, TNHA	-	T6
	Brass Cage	MB	M	BLANK	M, MI	BLANK
	Tapered Bore	KR	K	UPK	K	K
	Lube Groove And Holes On Outer Ring	E44	-	W33, U33X	AS	-
	Matched Clearance, Rings Not To Be Mixed	CCX	CCX	CX	CX	CXNA
	ABEC 7 Precision	P4	P4	SP	SP	P4

*The outer ring machined lubrication groove and holes (E44) is now a standard feature. TB cage replaces T cage, MB replaces M and KR replaces K.

The competitive manufacturers are provided for a convenient source of unit substitution. They can be considered interchangeable in most instances, but for special applications, please contact NSK. NSK assumes no liability with respect to errors or omissions.

APPLICATIONS

Super Precision Cylindrical roller bearings are designed to specifically handle large radial loads in high speed applications. They are available in a variety of designs, including double row and single row options, to suit various applications. In addition, a standard lube groove and hole feature is available along with tapered and non-tapered bores. When combined with Super Precision Angular Contact Thrust bearings, the Super Precision Cylindrical meets the high rigidity requirements of many machine tool spindle applications

› **Lathes** › **Machining Centers** › **(NN) Double Row Design for High Radial Rigidity**
› **(N) Single Row Design for Radial Rigidity and High Speed**

SUPER PRECISION CYLINDRICAL ROLLER BEARINGS: N1000 SERIES

SINGLE ROW

Bearing Number	Basic Bearing Dimensions						Preferred Shoulder Dimensions							
	d		D		B		r_a		d_a		D_b			
											min		max	
	mm	inch	mm	inch	mm	inch	mm	inch	mm	inch	mm	inch	mm	inch
N1006	30	1.1811	55	2.1654	13	0.5118	0.5	0.0197	35.0	1.3780	51.0	2.0079	49.0	1.9291
N1007	35	1.3780	62	2.4409	14	0.5512	0.5	0.0197	40.0	1.5748	58.0	2.2835	56.0	2.2047
N1008	40	1.5748	68	2.6772	15	0.5906	0.6	0.0236	45.0	1.7717	64.0	2.5197	62.0	2.4409
N1009	45	1.7717	75	2.9528	16	0.6299	0.6	0.0236	50.0	1.9685	71.0	2.7953	68.0	2.6772
N1010	50	1.9685	80	3.1496	16	0.6299	0.6	0.0236	55.0	2.1654	76.0	2.9921	73.0	2.8740
N1011	55	2.1654	90	3.5433	18	0.7087	1.0	0.0394	61.5	2.4213	85.0	3.3465	82.0	3.2283
N1012	60	2.3622	95	3.7402	18	0.7087	1.0	0.0394	66.5	2.6181	90.0	3.5433	87.0	3.4252
N1013	65	2.5591	100	3.9370	18	0.7087	1.0	0.0394	71.5	2.8150	95.0	3.7402	92.0	3.6220
N1014	70	2.7559	110	4.3307	20	0.7874	1.0	0.0394	76.5	3.0118	105.0	4.1339	101.0	3.9764
N1015	75	2.9528	115	4.5276	20	0.7874	1.0	0.0394	81.5	3.2087	110.0	4.3307	106.0	4.1732
N1016	80	3.1496	125	4.9213	22	0.8661	1.0	0.0394	86.5	3.4055	120.0	4.7244	115.0	4.5276
N1017	85	3.3465	130	5.1181	22	0.8661	1.0	0.0394	91.5	3.6024	125.0	4.9213	120.0	4.7244
N1018	90	3.5433	140	5.5118	24	0.9449	1.0	0.0394	98.0	3.8583	133.5	5.2559	129.0	5.0787
N1019	95	3.7402	145	5.7087	24	0.9449	1.0	0.0394	103.0	4.0551	138.5	5.4528	134.0	5.2756
N1020	100	3.9370	150	5.9055	24	0.9449	1.0	0.0394	108.0	4.2520	143.5	5.6496	139.0	5.4724
N1021	105	4.1339	160	6.2992	26	1.0236	1.0	0.0394	114.0	4.4882	153.5	6.0433	147.0	5.7874
N1022	110	4.3307	170	6.6929	28	1.1024	1.0	0.0394	119.0	4.6850	163.5	6.4370	157.0	6.1811
N1024	120	4.7244	180	7.0866	28	1.1024	1.0	0.0394	129.0	5.0787	173.5	6.8307	167.0	6.5748
N1026	130	5.1181	200	7.8740	33	1.2992	1.0	0.0394	139.0	5.4724	193.5	7.6181	184.0	7.2441
N1028	140	5.5118	210	8.2677	33	1.2992	1.0	0.0394	149.0	5.8661	203.5	8.0118	194.0	7.6378

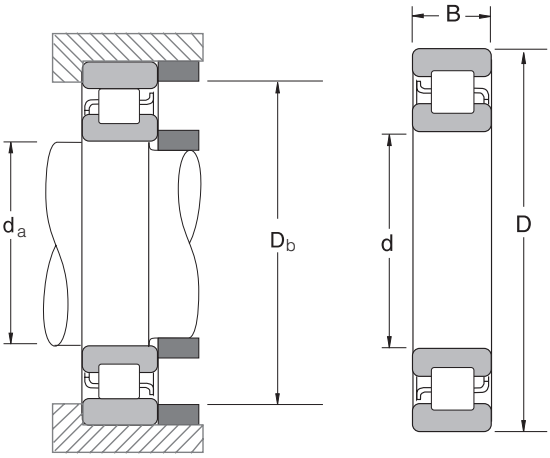

COMMON OPTIONS	
M	One piece brass cage; inner ring guided
MB	Split type brass cage; roller guided
MR	Riveted brass cage; roller guided
T	Polyamide cage; roller guided
KR	Precision Tapered Bore 1:12
CCx	Matched Clearance (9, 1, ...)
CCGxx*	Special radial clearance
P4	ISO 4 (ABEC7) Precision

* Median clearance in microns

Bearing Number	Basic Load Ratings (lbs)				Limiting Speeds (RPM)		Bearing Weight (Approx.)	
	C_r		C_{or}		Grease	Oil		
	N	lbs	N	lbs			kg	lbs
N1006	19700	4400	19600	4400	19000	31000	0.133	0.29
N1007	22600	5100	23200	5200	17000	27000	0.153	0.34
N1008	27300	6150	29000	6500	15000	25000	0.192	0.42
N1009	32500	7300	35500	8000	14000	22000	0.318	0.70
N1010	32000	7200	36000	8100	13000	20000	0.339	0.75
N1011	37500	8450	44000	9850	12000	18000	0.487	1.07
N1012	40000	9000	48500	10900	11000	17000	0.519	1.14
N1013	41000	9250	51000	11500	10000	16000	0.541	1.19
N1014	58500	13100	70500	15800	9000	15000	0.752	1.66
N1015	60000	13500	74500	16700	8500	13700	0.935	2.06
N1016	72500	16400	90500	20400	7900	12700	1.038	2.29
N1017	74500	16700	95500	21500	7500	12100	1.067	2.35
N1018	88000	19800	114000	25700	7000	11400	1.200	2.65
N1019	90500	20400	120000	27000	6700	10900	1.260	2.78
N1020	93000	20900	126000	28300	6400	10400	1.320	2.91
N1021	109000	24500	149000	33500	6100	9900	1.670	3.68
N1022	131000	29500	174000	39000	5800	9300	2.070	4.56
N1024	139000	31000	191000	43000	5400	8700	2.190	4.83
N1026	172000	38500	238000	53500	4900	7900	3.320	7.32
N1028	176000	39500	250000	56000	4600	7500	3.810	8.40

C_r = Dynamic Radial Load Rating C_{or} = Static Radial Load Rating

SUPER PRECISION CYLINDRICAL ROLLER BEARINGS: NN3000 SERIES

DOUBLE ROW

Bearing Number	Basic Bearing Dimensions						Preferred Shoulder Dimensions			
	d		D		B		r_a max		d_a max	
	mm	inch	mm	inch	mm	inch	mm	inch	mm	inch
NN3005	25	0.9843	47	1.8504	16	0.6299	0.6	0.0236	29.0	1.1417
NN3006	30	1.1811	55	2.1654	19	0.7480	1.0	0.0394	35.0	1.3780
NN3007	35	1.3780	62	2.4409	20	0.7874	1.0	0.0394	40.0	1.5748
NN3008	40	1.5748	68	2.6772	21	0.8268	1.0	0.0394	45.0	1.7717
NN3009	45	1.7717	75	2.9528	23	0.9055	1.0	0.0394	50.0	1.9685
NN3010	50	1.9685	80	3.1496	23	0.9055	1.0	0.0394	55.0	2.1654
NN3011	55	2.1654	90	3.5433	26	1.0236	1.0	0.0394	61.5	2.4213
NN3012	60	2.3622	95	3.7402	26	1.0236	1.0	0.0394	66.5	2.6181
NN3013	65	2.5591	100	3.9370	26	1.0236	1.0	0.0394	71.5	2.8150
NN3014	70	2.7559	110	4.3307	30	1.1811	1.0	0.0394	76.5	3.0118
NN3015	75	2.9528	115	4.5276	30	1.1811	1.0	0.0394	81.5	3.2087
NN3016	80	3.1496	125	4.9213	34	1.3386	1.0	0.0394	86.5	3.4055
NN3017	85	3.3465	130	5.1181	34	1.3386	1.0	0.0394	91.5	3.6024
NN3018	90	3.5433	140	5.5118	37	1.4567	1.5	0.0591	98.0	3.8583
NN3019	95	3.7402	145	5.7087	37	1.4567	1.5	0.0591	103.0	4.0551
NN3020	100	3.9370	150	5.9055	37	1.4567	1.5	0.0591	108.0	4.2520
NN3021	105	4.1339	160	6.2992	41	1.6142	2.0	0.0787	114.0	4.4882
NN3022	110	4.3307	170	6.6929	45	1.7717	2.0	0.0787	119.0	4.6850
NN3024	120	4.7244	180	7.0866	46	1.8110	2.0	0.0787	129.0	5.0787
NN3026	130	5.1181	200	7.8740	52	2.0472	2.0	0.0787	139.0	5.4724
NN3028	140	5.5118	210	8.2677	53	2.0866	2.0	0.0787	149.0	5.8661
NN3030	150	5.9055	225	8.8583	56	2.2047	2.0	0.0787	161.0	6.3386
NN3032	160	6.2992	240	9.4488	60	2.3622	2.0	0.0787	171.0	6.7323
NN3034	170	6.6929	260	10.2362	67	2.6378	2.0	0.0787	181.0	7.1260
NN3036	180	7.0866	280	11.0236	74	2.9134	2.0	0.0787	191.0	7.5197
NN3038	190	7.4803	290	11.4173	75	2.9528	2.0	0.0787	201.0	7.9134
NN3040	200	7.8740	310	12.2047	82	3.2283	2.0	0.0787	211.0	8.3071

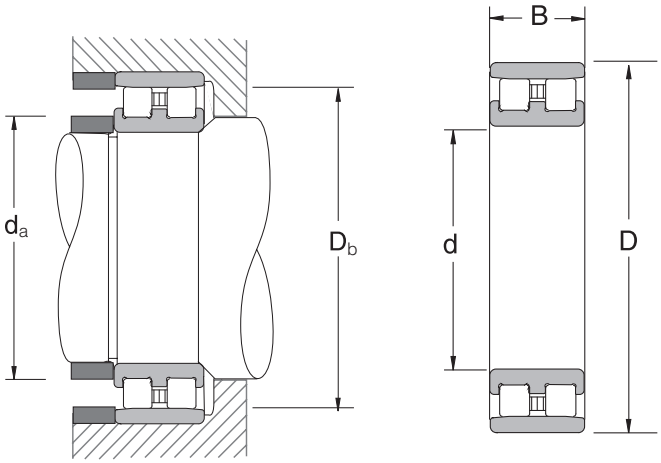

COMMON OPTIONS	
M	One piece brass cage; inner ring guided
MB	Split type brass cage; roller guided
MR	Riveted brass cage; roller guided
T	Polyamide cage; roller guided
TB	Roller guided PPS resin cage
KR	Precision Tapered Bore 1:12
E44	Lube groove and holes, outer ring
CCx	Matched Clearance (9, 1, ...)
CCGxx*	Special radial clearance
P4	ISO 4 (ABEC7) Precision

* Median clearance in microns

Bearing Number	Preferred Shoulder Dimensions D_b				Basic Load Ratings				Limiting Speeds (RPM)		Bearing Weight (Approx.)	
	min		max		C_r		C_{or}		Grease	Oil	lbs	
	mm	inch	mm	inch	N	lbs	N	lbs			kg	lbs
NN3005	43.0	1.6929	42.0	1.6535	25800	5800	30000	6750	20900	25000	0.127	0.28
NN3006	50.0	1.9685	50.0	1.9685	31000	6900	37000	8350	17700	21200	0.198	0.44
NN3007	57.0	2.2441	56.0	2.2047	39500	8850	50000	11200	15500	18600	0.258	0.57
NN3008	63.0	2.4803	62.0	2.4409	43500	9750	55500	12500	13900	16700	0.309	0.68
NN3009	70.0	2.7559	69.0	2.7165	52000	11600	68500	15400	12500	15000	0.407	0.90
NN3010	75.0	2.9528	74.0	2.9134	53000	11900	72500	16300	11600	13900	0.436	0.96
NN3011	83.5	3.2874	83.0	3.2677	69500	15600	96500	21700	10400	12500	0.647	1.43
NN3012	88.5	3.4843	88.0	3.4646	73500	16500	106000	23900	9700	11700	0.693	1.53
NN3013	93.5	3.6811	93.0	3.6614	77000	17300	116000	26000	9100	11000	0.741	1.63
NN3014	103.5	4.0748	102.0	4.0157	97500	21900	148000	33500	8000	10000	1.060	2.34
NN3015	108.5	4.2717	107.0	4.2126	96500	21700	149000	33500	7900	9500	1.110	2.45
NN3016	118.5	4.6654	115.0	4.5276	119000	26800	186000	42000	7400	8800	1.540	3.40
NN3017	123.5	4.8622	120.0	4.7244	125000	28100	201000	45000	7000	8400	1.630	3.59
NN3018	132.0	5.1969	129.0	5.0787	143000	32000	228000	51000	6600	7900	2.090	4.61
NN3019	137.0	5.3937	134.0	5.2756	150000	33500	246000	55500	6300	7500	2.190	4.83
NN3020	142.0	5.5906	139.0	5.4724	157000	35500	265000	59500	6000	7200	2.280	5.03
NN3021	151.0	5.9449	148.0	5.8268	198000	44500	320000	72500	5700	6800	2.880	6.35
NN3022	161.0	6.3386	157.0	6.1811	229000	51500	375000	84500	5400	6500	3.710	8.18
NN3024	171.0	6.7323	167.0	6.5748	239000	54000	405000	91500	5000	6000	4.040	8.91
NN3026	191.0	7.5197	185.0	7.2835	284000	64000	475000	107000	4600	5500	5.880	12.96
NN3028	201.0	7.9134	195.0	7.6772	298000	67000	515000	116000	4300	5200	6.340	13.98
NN3030	214.0	8.4252	209.0	8.2283	335000	75000	585000	132000	4000	4800	7.760	17.11
NN3032	229.0	9.0157	222.0	8.7402	375000	84000	660000	149000	3800	4500	9.410	20.75
NN3034	249.0	9.8031	239.0	9.4094	450000	102000	805000	181000	3500	4200	12.800	28.22
NN3036	269.0	10.5906	258.0	10.1575	565000	127000	995000	224000	3300	4000	16.800	37.04
NN3038	279.0	10.9843	268.0	10.5512	595000	134000	1080000	242000	3200	3800	17.800	39.24
NN3040	299.0	11.7717	285.0	11.2205	655000	147000	1170000	262000	3000	3600	22.700	50.04

C_r = Dynamic Radial Load Rating C_{or} = Static Radial Load Rating

SUPER PRECISION CYLINDRICAL ROLLER BEARINGS: NN3900 SERIES

DOUBLE ROW

Bearing Number	Basic Bearing Dimensions						Preferred Shoulder Dimensions							
	d		D		B		r_a		d_a		D_b			
											min		max	
	mm	inch	mm	inch	mm	inch	mm	inch	mm	inch	mm	inch	mm	inch
NN3920	100	3.9370	140	5.5118	30	1.1811	1.0	0.0394	106.5	4.1929	133.5	5.2559	131.0	5.1575
NN3921	105	4.1339	145	5.7087	30	1.1811	1.0	0.0394	111.5	4.3898	138.5	5.4528	136.0	5.3543
NN3922	110	4.3307	150	5.9055	30	1.1811	1.0	0.0394	116.5	4.5866	143.5	5.6496	141.0	5.5512
NN3924	120	4.7244	165	6.4961	34	1.3386	1.0	0.0394	126.5	4.9803	158.5	6.2402	154.5	6.0827
NN3926	130	5.1181	180	7.0866	37	1.4567	1.5	0.0591	138.0	5.4331	172.0	6.7717	169.0	6.6535
NN3928	140	5.5118	190	7.4803	37	1.4567	1.5	0.0591	148.0	5.8268	182.0	7.1654	180.0	7.0866
NN3930	150	5.9055	210	8.2677	45	1.7717	2.0	0.0787	159.0	6.2598	201.0	7.9134	197.0	7.7559
NN3932	160	6.2992	220	8.6614	45	1.7717	2.0	0.0787	169.0	6.6535	211.0	8.3071	207.0	8.1496
NN3934	170	6.6929	230	9.0551	45	1.7717	2.0	0.0787	179.0	7.0472	221.0	8.7008	217.0	8.5433
NN3936	180	7.0866	250	9.8425	52	2.0472	2.0	0.0787	189.0	7.4409	241.0	9.4882	234.0	9.2126
NN3938	190	7.4803	260	10.2362	52	2.0472	2.0	0.0787	199.0	7.8346	251.0	9.8819	245.5	9.6654
NN3940	200	7.8740	280	11.0236	60	2.3622	2.0	0.0787	211.0	8.3071	269.0	10.5906	261.0	10.2756
NN3944	220	8.6614	300	11.8110	60	2.3622	2.0	0.0787	231.0	9.0945	289.0	11.3780	281.0	11.0630
NN3948	240	9.4488	320	12.5984	60	2.3622	2.0	0.0787	251.0	9.8819	309.0	12.1654	302.0	11.8898
NN3952	260	10.2362	360	14.1732	75	2.9528	2.0	0.0787	271.0	10.6693	349.0	13.7402	338.0	13.3071
NN3956	280	11.0236	380	14.9606	75	2.9528	2.0	0.0787	291.0	11.4567	369.0	14.5276	358.0	14.0945

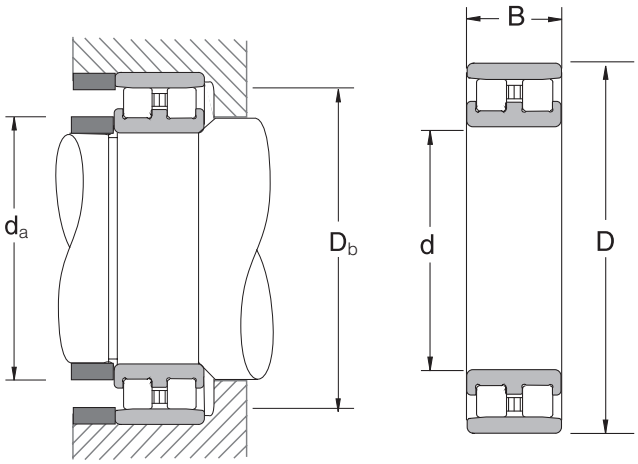

COMMON OPTIONS	
M	One piece brass cage; inner ring guided
MB	Split type brass cage; roller guided
MR	Riveted brass cage; roller guided
T	Polyamide cage; roller guided
TB	Roller guided PPS resin cage
KR	Precision Tapered Bore 1:12
E44	Lube groove and holes, outer ring
CCx	Matched Clearance (9, 1, ...)
CCGxx*	Special radial clearance
P4	ISO 4 (ABEC7) Precision

* Median clearance in microns

Bearing Number	Basic Load Ratings				Limiting Speeds (RPM)		Bearing Weight (Approx.)	
	C_r		C_{or}		Grease	Oil		
	N	lbs	N	lbs			kg	lbs
NN3920	106000	23800	182000	41000	6300	7500	1.32	2.91
NN3921	110000	24700	194000	43600	6000	7200	1.50	3.31
NN3922	114000	25700	207000	46500	5800	7000	1.41	3.11
NN3924	138000	31000	251000	56500	5300	6400	1.99	4.39
NN3926	173000	39000	325000	73000	4900	5900	2.64	5.82
NN3928	201000	45500	375000	85000	4600	5500	2.97	6.55
NN3930	262000	59000	490000	110000	4200	5000	4.47	9.85
NN3932	271000	61000	520000	117000	4000	4800	4.75	10.47
NN3934	280000	63000	550000	124000	3800	4500	5.01	11.05
NN3936	340000	76500	655000	148000	3500	4200	7.76	17.11
NN3938	345000	77500	680000	153000	3400	4000	7.46	16.45
NN3940	420000	94000	815000	184000	3200	3800	10.60	23.37
NN3944	440000	98500	895000	201000	2900	3500	11.40	25.13
NN3948	460000	103000	975000	219000	2700	3300	12.10	26.68
NN3952	670000	151000	1380000	310000	2500	3000	21.40	47.18
NN3956	695000	156000	1460000	330000	2300	2800	22.70	50.04

C_r = Dynamic Radial Load Rating
C_{or} = Static Radial Load Rating

BALL SCREW SUPPORT BEARINGS

TAC SERIES

Bearing Bore Diameter (mm)
For inch series bearings, the figures to the right of the decimal point are omitted when converted to millimeters.

30

TAC

Bearing Type Symbol
(Contact Angle 60°)

Bearing Outside Diameter (mm)
For inch series bearings, the figures to the right of the decimal point are omitted when converted to millimeters.

62

C

Internal Specification Symbol
A: Standard Capacity
C: High Capacity HPS Series

Combination Symbols
SU: Single Universal
DF: Duplex Face to Face
DB: Duplex Back to Back
DT: Duplex Tandem
DBD: 3 Row Combinations
DFF: 4 Row Combinations
DFT: 4 Row Combinations
DTT: 4 Row Combinations

SU

H

Preload Symbol
H: Heavy Preload

Accuracy Symbol
PN7C: NES Class 7

PN7C

Please refer to the bearing tables for exact part number options

INTERCHANGE

Description		Interchange				
		NSK	SKF	FAF/TIMKEN	MRC	NTN
Part No.	Metric Type	xxTACxxx	BDAB6342xx	MMxxBSxxx	--	BSTxxXxx
	Inch Type	xxTACxxx	BDAB6342xx	MM93xxWI xH	Jxxx	--
Part Number Suffix	Internal Specifications (Standard Capacity)	A	--	--	--	X
	Internal Specifications (High Capacity HPS Series)	C	C	--	--	-1B
	Single Universal	SU	G	SU	DS	G
	Duplex Universal	DU	DG	DU	DU	GD2
	Duplex Face to Face	DF	DF	DU	DF	DF
	Duplex Back to Back	DB	DB	DU	DB	DB
	Duplex Tandem	DT	DT	DU	DT	DT
	Quad Set \\ //	DFF	QFC	QU	--	DTFT
	Quad Set \ ///	DFT	QFT	QU	DFDT	--
	Quad Set // \\	DBB	QBC	QU	--	--
	Quad Set / \\\	DBT	QBT	QU	--	DTBT
	Quad Set ////	DTT	QT	QU	--	--
	NES Class 7	PN7C	P4(PA7)	MM	BLANK	P4/UP
	Heavy Preload	H	BLANK	H	BLANK	BLANK

The competitive manufacturers are provided for a convenient source of unit substitution. They can be considered interchangeable in most instances, but for special applications, please consult NSK Engineering. NSK assumes no liability with respect to errors or omissions.

APPLICATIONS

Ball Screw Support bearings are designed specifically to provide maximum axial rigidity and improved feeding accuracy for use with precision ball screws. They are high accuracy angular contact thrust bearings, which are superior to combinations of standard angular contact bearings or arrangements of radial and thrust bearings for ball screw applications. Both Metric and Inch series are available.

› **Precision Ball Screws** › **Rolled Ball Screws** › **Heavy Duty Ball Screw Support Units**

BALL SCREW SUPPORT BEARINGS: MAJOR DIMENSIONS

TAC SERIES

INCH SERIES

Bearing Number	Boundary Dimensions						
	Bore Diameter d		Outside Diameter D		Width B		Sealed Design Available
	mm	inch	mm	inch	mm	inch	
20TAC47XC	20.000	0.7874	47.0	1.8504	15.875	0.6250	-
23TAC62C	23.838	0.9385	62.0	2.4409	15.875	0.6250	-
38TAC72C	38.100	1.5000	72.0	2.8346	15.875	0.6250	-
44TAC76C	44.475	1.7510	76.2	3.0000	15.875	0.6250	-
57TAC90A	57.150	2.2500	90.0	3.5433	15.875	0.6250	-
76TAC110A	76.200	3.0000	110.0	4.3307	15.875	0.6250	-
101TAC145A	101.600	4.0000	145.0	5.7086	22.225	0.8750	-

METRIC SERIES

Bearing Number	Boundary Dimensions						
	Bore Diameter d		Outside Diameter D		Width B		Sealed Design Available
	mm	inch	mm	inch	mm	inch	
15TAC47C	15	0.5906	47	1.8504	15	0.5906	*
17TAC47C	17	0.6693	47	1.8504	15	0.5906	*
20TAC47C	20	0.7874	47	1.8504	15	0.5906	*
25TAC62C	25	0.9843	62	2.4409	15	0.5906	*
30TAC62C	30	1.1811	62	2.4409	15	0.5906	*
35TAC72C	35	1.3780	72	2.8346	15	0.5906	*
40TAC72C	40	1.5748	72	2.8346	15	0.5906	*
40TAC90C	40	1.5748	90	3.5433	20	0.7874	*
45TAC75C	45	1.7717	75	2.9528	15	0.5906	*
45TAC100C	45	1.7717	100	3.9370	20	0.7874	*
50TAC100C	50	1.9685	100	3.9370	20	0.7874	*
55TAC100C	55	2.1654	100	3.9370	20	0.7874	*
55TAC120C	55	2.1654	120	4.7244	20	0.7874	-
60TAC120C	60	2.3622	120	4.7244	20	0.7874	-

BALL SCREW SUPPORT BEARINGS: LOAD RATINGS

TAC SERIES

COMMON OPTIONS	
DDG	Contact Rubber Seal
SU	Single Universal
DU	Duplex Universal
QU	Quad Set Universal
C10	Heavy preload (metric series)
C11	Heavy preload (inch series)
PN7B	Tighter bore and O.D. accuracy for universally ground (SU) bearings

INCH SERIES

Bearing Number	Dynamic Axial Load Rating						Limited Axial Load					
	One Row Loaded DF		Two Rows Loaded DFD • DFF • DT		Three Rows Loaded DFT • DFTD		One Row Loaded DF		Two Rows Loaded DFD • DFF • DT		Three Rows Loaded DFT • DFTD	
	N	lbs	N	lbs	N	lbs	N	lbs	N	lbs	N	lbs
20TAC47XC	23000	5150	37500	8450	49500	11150	26600	6000	53000	11900	79500	17850
23TAC62C	29900	6700	48500	10900	64500	14500	40500	9100	81500	18300	122000	27450
38TAC72C	33500	7550	54000	12150	72000	16200	52000	11700	104000	23400	157000	35300
44TAC76C	34500	7750	56000	12600	74500	16750	57000	12800	114000	25650	170000	38200
57TAC90A	32000	7200	52000	11700	69500	15600	45000	10100	89500	20200	134000	30000
76TAC110A	35500	8000	57500	12900	76000	17100	57500	12900	115000	25900	173000	39000
101TAC145A	88500	19900	144000	32500	191000	43000	134000	30000	268000	60500	400000	90500

METRIC SERIES

Bearing Number	Dynamic Axial Load Rating						Limited Axial Load					
	One Row Loaded DF		Two Rows Loaded DFD • DFF • DT		Three Rows Loaded DFT • DFTD		One Row Loaded DF		Two Rows Loaded DFD • DFF • DT		Three Rows Loaded DFT • DFTD	
	N	lbs	N	lbs	N	lbs	N	lbs	N	lbs	N	lbs
15TAC47C	23000	5150	37500	8450	49500	11150	26600	6000	53000	11900	79500	17850
17TAC47C	23000	5150	37500	8450	49500	11150	26600	6000	53000	11900	79500	17850
20TAC47C	23000	5150	37500	8450	49500	11150	26600	6000	53000	11900	79500	17850
25TAC62C	29900	6700	48500	10900	64500	14500	40500	9100	81500	18300	122000	27450
30TAC62C	30500	6850	50000	11250	66000	14850	43000	9650	86000	19350	129000	29000
35TAC72C	32500	7300	53000	11900	70500	15850	50000	11250	100000	22500	150000	33700
40TAC72C	33500	7550	54000	12150	72000	16200	52000	11700	104000	23400	157000	35300
40TAC90C	62000	13950	101000	22700	134000	30150	89500	20100	179000	40250	269000	60500
45TAC75C	34500	7750	56000	12600	74500	16750	57000	12800	114000	25650	170000	38200
45TAC100C	64500	14500	105000	23600	140000	31450	99000	22250	198000	44500	298000	67000
50TAC100C	66000	14850	107000	24050	142000	31900	104000	23400	208000	46750	310000	69700
55TAC100C	66000	14850	107000	24050	142000	31900	104000	23400	208000	46750	310000	69700
55TAC120C	70500	15850	115000	25850	153000	34400	123000	27650	246000	55300	370000	83200
60TAC120C	70500	15850	115000	25850	153000	34400	123000	27650	246000	55300	370000	83200

BALL SCREW SUPPORT BEARINGS: PRELOADS

TAC SERIES

INCH SERIES (PRELOAD SYMBOL H)

Bearing Number	Duplex Combination (DF) Preload		Triplex Combination (DFD) Preload		Quadruplex Combination (DFF) Preload	
	N	lbs	N	lbs	N	lbs
20TAC47XC	1450	325	1970	445	2900	650
23TAC62C	2280	515	3100	695	4560	1025
38TAC72C	2860	645	3900	875	5720	1285
44TAC76C	3100	695	4210	945	6200	1395
57TAC90A*	7800	1750	10300	2320	15600	3500
76TAC110A*	10000	2250	13200	2970	20000	4500
101TAC145A*	13400	3000	18100	4050	26500	5950

* 57/76/101 use C11 as Standard Preload

METRIC SERIES (PRELOAD SYMBOL H)

Bearing Number	Duplex Combination (DF) Preload		Triplex Combination (DFD) Preload		Quadruplex Combination (DFF) Preload	
	N	lbs	N	lbs	N	lbs
15TAC47C	1450	325	1970	445	2900	650
17TAC47C	1450	325	1970	445	2900	650
20TAC47C	1450	325	1970	445	2900	650
25TAC62C	2280	515	3100	695	4560	1025
30TAC62C	2400	540	3260	735	4800	1080
35TAC72C	2750	620	3740	840	5500	1235
40TAC72C	2860	645	3890	875	5720	1285
40TAC90C	3450	775	4690	1055	6900	1550
45TAC75C	3100	695	4220	950	6200	1395
45TAC100C	4440	1000	6040	1360	8880	1995
50TAC100C	4650	1045	6320	1420	9300	2090
55TAC100C	4650	1045	6320	1420	9300	2090
55TAC120C	5450	1225	7410	1665	10900	2450
60TAC120C	5450	1225	7410	1665	10900	2450

BALL SCREW SUPPORT BEARINGS
NSKHPS BSBD SERIES

Bearing Series
BS: Double row angular contact thrust ball bearing

BS

F

Bearing Type
F: Flange type
N: No flange

Bore Diameter
From 12 to 60mm (matched pairs 17 to 50mm)

30

80

Outer Diameter
From 55 to 145mm (matched pairs 62 to 140mm)

Seals
DDU: Contact triple lip seal

DDU

H

Preload
H: Heavy preload, standard in HPS series

Accuracy
P2B: Running accuracy is ISO class 2, otherwise NSK-specific

P2B

DT

Arrangement
Blank: Single bearing
DT: Matched pair

Please refer to the bearing tables for exact part number options

INTERCHANGE

Description		Interchange	
		NSK	INA
Part No.	Double row thrust angular contact ball bearing	BS	ZKL
Part Number Suffix	Flanged bearing type	F	F
	Nonflanged bearing type	N	N
	DDU contact type triple lip seals	DDU	-2RS
	ISO class 2 running accuracy	P2B	BLANK/-PE
	Single bearing	BLANK	BLANK
	Matched pair	DT	-2AP

The competitive manufacturers are provided for a convenient source of unit substitution. They can be considered interchangeable in most instances, but for special applications, please consult NSK Engineering. NSK assumes no liability with respect to errors or omissions.

APPLICATIONS

NSK's BSBD series of support bearings for ball screw drives are designed to meet the demanding requirements of modern machine tools, where ball screws must accurately position a work piece or machine component quickly and efficiently. A double row configuration, with a 60° contact angle, enables the bearings to support large axial forces in both directions with accuracy and rigidity. The bearings are supplied sealed, greased for life and ready for easy installation for both housing mounting (BSN type) and direct mounting (BSF type).

› Precision Ball Screws › Rolled Ball Screws › Heavy Duty Ball Screw Support Units

BALL SCREW SUPPORT BEARINGS: BSBD SERIES

BSN TYPE

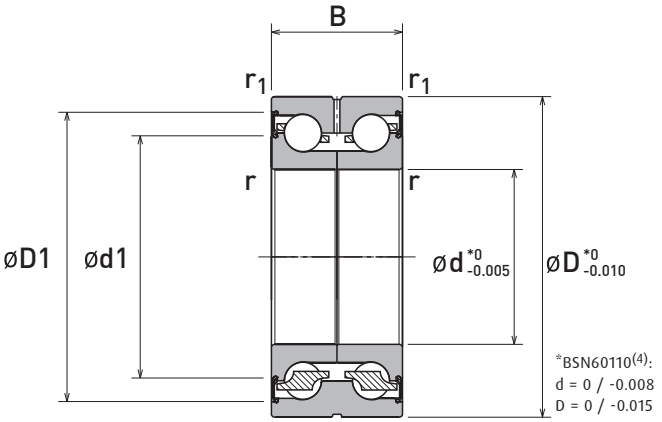

Bearing Numbers	Boundary Dimensions (mm)					Reference Dimensions (mm)		Basic Dynamic Load Rating (kN)	Basic Static Load Rating (kN)	Limiting Axial Load[3] (kN)	Inertia (kg·cm²)	Axial rigidity (N/μm)	Tilting rigidity (Nm/mrad)	Mass (kg)	Limiting Speed (min⁻¹)	Starting torque[1] (Nm)	Recommended Clamping Force (N)
	d	D	B	r (min)	r_1 (min)	d1	D1								Grease		
BSN1242	12	42	25	0.3	0.6	23.7	32.7	18.5	24.0	17.6	0.068	375	50	0.200	8,000	0.05	4,030
BSN1545	15	45	25	0.3	0.6	26.7	35.7	19.4	26.9	19.4	0.101	400	60	0.220	7,200	0.05	4,050
BSN1747	17	47	25	0.6	0.6	28.1	37.7	20.3	29.7	21.2	0.130	450	80	0.230	6,700	0.05	4,400
BSN2052	20	52	28	0.6	0.6	32.6	43.0	26.4	41.0	29.3	0.258	650	140	0.310	5,800	0.13	7,600
BSN2557	25	57	28	0.6	0.6	37.6	48.0	28.3	48.0	34.0	0.413	750	210	0.360	5,100	0.16	8,100
BSN3062	30	62	28	0.6	0.6	42.6	53.0	30.0	55.5	38.5	0.624	850	290	0.398	4,500	0.19	8,600
BSN3072[2]	30	72	38	0.6	0.6	49.1	64.4	60.5	94.0	66.5	1.800	950	440	0.740	3,900	0.59	11,100
BSN3572	35	72	34	0.6	0.6	53.1	62.2	42.0	77.5	52.0	1.410	900	400	0.660	3,800	0.21	13,500
BSN4075	40	75	34	0.6	0.6	55.1	67.2	44.5	88.0	58.5	1.950	1,000	560	0.650	3,500	0.24	14,100
BSN4090[2]	40	90	46	0.6	0.6	63.1	80.1	78.5	135.0	91.0	5.200	1,200	910	1.380	3,100	1.02	18,700
BSN5090	50	90	34	0.6	0.6	70.1	82.2	48.0	110.0	71.5	5.000	1,250	1,050	0.930	2,800	0.33	15,400
BSN50110[2]	50	110	54	0.6	0.6	78.1	97.5	116.0	219.0	149.0	14.600	1,400	1,600	2.460	2,500	1.06	19,100
BSN60110	60	110	45	0.6	0.6	83.1	99.3	86.5	187.0	126.0	12.900	1,300	1,600	1.820	2,400	0.50	20,900

[1] Starting torque indicates torque due to the preload of the bearing only. If you need further information please consult NSK
[2] Heavy series
[3] Limiting axial load is defined as the maximum load whose large contact ellipse between the ball and raceway does not cause overriding of the shoulder of the raceway groove
[4] Tolerances are valid for all sizes except for sizes mentioned in the sketch above

BALL SCREW SUPPORT BEARINGS: BSBD SERIES

BSF TYPE

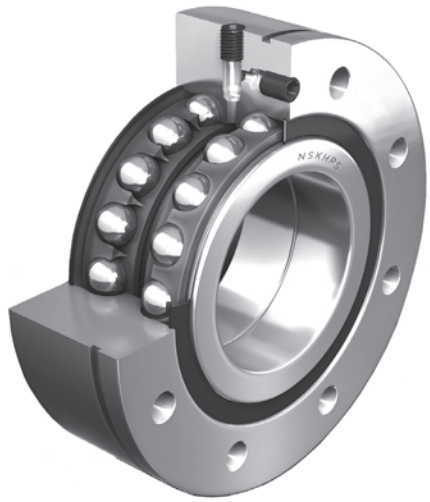

Design for d = 60 mm

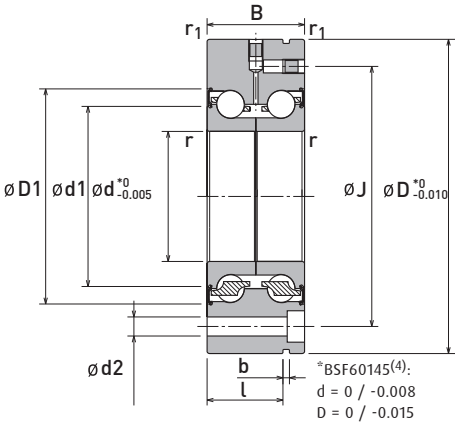

Design for d ≤ 50 mm

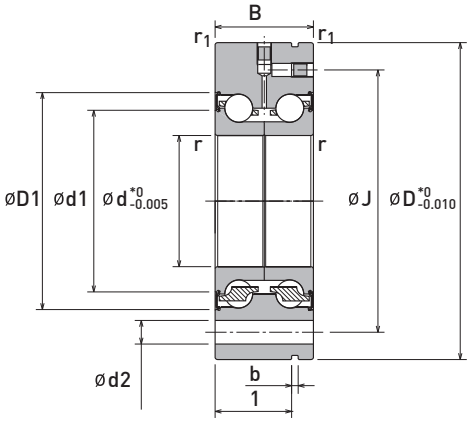

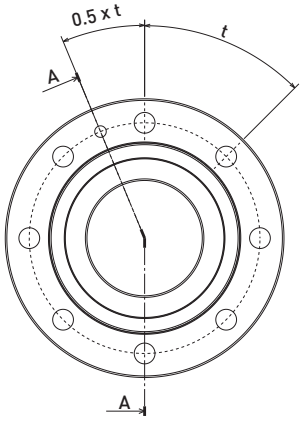

Bearing Numbers	Boundary Dimensions (mm)					Reference Dimensions (mm)							Fixing screws		Basic Dynamic Load Rating (kN)	Basic Static Load Rating (kN)	Limiting Axial Load[3] (kN)	Inertia (kg·cm²)	Axial Rigidity (N/μm)	Tilting rigidity (Nm/mrad)	Mass (kg)	Limiting Speed (min⁻¹)	Starting torque[1] (Nm)	Recommended Clamping Force (N)
	d	D	B	r (min)	r1 (min)	d1	D1	J	d2	l	b	t	Size	Qty								Grease		
BSF1255	12	55	25	0.3	0.6	23.7	32.7	42	6.8	17	3	3 x 120º	M6	3	18.5	24.0	17.6	0.068	375	50	0.370	8,000	0.05	4,030
BSF1560	15	60	25	0.3	0.6	26.7	35.7	46	6.8	17	3	3 x 120º	M6	3	19.4	26.9	19.4	0.101	400	60	0.440	7,200	0.05	4,050
BSF1762	17	62	25	0.6	0.6	28.1	37.7	48	6.8	17	3	3 x 120º	M6	3	20.3	29.7	21.2	0.130	450	80	0.460	6,700	0.05	4,400
BSF2068	20	68	28	0.6	0.6	32.6	43.0	53	6.8	19	3	4 x 90º	M6	4	26.4	41.0	29.3	0.258	650	140	0.610	5,800	0.13	7,600
BSF2575	25	75	28	0.6	0.6	37.6	48.0	58	6.8	19	3	4 x 90º	M6	4	28.3	48.0	34.0	0.413	750	210	0.730	5,100	0.16	8,100
BSF3080	30	80	28	0.6	0.6	42.6	53.0	63	6.8	19	3	6 x 60º	M6	6	30.0	55.5	38.5	0.624	850	290	0.783	4,500	0.19	8,600
BSF30100[2]	30	100	38	0.6	0.6	49.1	64.4	80	8.8	30	3	8 x 45º	M8	8	60.5	94.0	66.5	1.800	950	440	1.710	3,900	0.59	11,100
BSF3590	35	90	34	0.6	0.6	53.1	62.2	75	8.8	25	3	4 x 90º	M8	4	42.0	77.5	52.0	1.410	900	400	1.200	3,800	0.21	13,500
BSF40100	40	100	34	0.6	0.6	55.1	67.2	80	8.8	25	3	4 x 90º	M8	4	44.5	88.0	58.5	1.950	1000	560	1.490	3,500	0.24	14,100
BSF40115[2]	40	115	46	0.6	0.6	63.1	80.1	94	8.8	36	3	12 x 30º	M8	12	78.5	135.0	91.0	5.200	1200	910	2.560	3,100	1.02	18,700
BSF50115	50	115	34	0.6	0.6	70.1	82.2	94	8.8	25	3	6 x 60º	M8	6	48.0	110.0	71.5	5.000	1250	1,050	1.890	2,800	0.33	15,400
BSF50140[2]	50	140	54	0.6	0.6	78.1	97.5	113	11.0	45	3	12 x 30º	M10	12	116.0	219.0	149.0	14.600	1400	1,600	4.460	2,500	1.06	19,100
BSF60145	60	145	45	0.6	0.6	83.1	99.3	120	8.8	35	3	8 x 45º	M8	8	86.5	187.0	126.0	12.900	1300	1,600	4.060	2,400	0.50	20,900

[1] Starting torque indicates torque due to the preload of the bearing only. If you need further information please consult NSK

[2] Heavy series

[3] Limiting axial load is defined as the maximum load whose large contact ellipse between the ball and raceway does not cause overriding of the shoulder of the raceway groove

[4] Tolerances are valid for all sizes except for sizes mentioned in the sketch

BALL SCREW SUPPORT BEARINGS: BSBD SERIES

BSN-DT SERIES

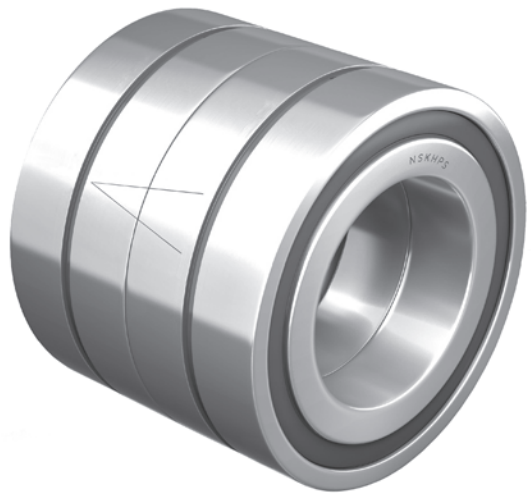

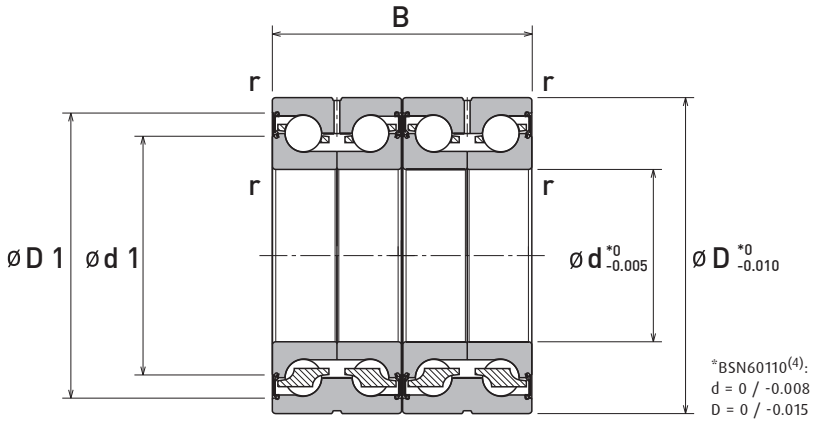

Bearing Numbers	Boundary Dimensions (mm)				Reference Dimensions (mm)		Basic Dynamic Load Rating (kN)	Basic Static Load Rating (kN)	Limiting Axial Load[3] (kN)	Inertia (kg·cm^2)	Axial rigidity (N/µm)	Tilting rigidity (Nm/mrad)	Mass (kg)	Limiting Speed (min^{-1})	Starting torque[1] (Nm)	Recommended Clamping Force (N)
	d	D	B	r (min)	d_1	D_1								Grease		
BSN1747-DT	17	47	50	0.6	28.1	37.7	33.0	59.5	42.5	0.260	790	175	0.46	6,700	0.10	4,400
BSN2052-DT	20	52	56	0.6	32.6	43.0	43.0	82.0	58.5	0.516	1,180	320	0.620	5,800	0.26	7,600
BSN2557-DT	25	57	56	0.6	37.6	48.0	46.0	96.0	68.0	0.826	1,370	460	0.720	5,100	0.32	8,100
BSN3062-DT	30	62	56	0.6	42.6	53.0	49.0	111.0	77.0	1.248	1,580	620	0.796	4,500	0.37	8,600
BSN3072-DT[2]	30	72	76	0.6	49.1	64.4	98.0	188.0	133.0	3.600	1,800	990	1.480	3,900	1.17	11,100
BSN3572-DT	35	72	68	0.6	53.1	62.2	68.0	155.0	104.0	2.820	1,630	900	1.320	3,800	0.41	13,500
BSN4075-DT	40	75	68	0.6	55.1	67.2	72.0	176.0	117.0	3.900	1,850	1,200	1.300	3,500	0.49	14,100
BSN4090-DT[2]	40	90	92	0.6	63.1	80.1	128.0	269.0	182.0	10.400	2,300	2,000	2.760	3,100	2.03	1,870
BSN5090-DT	50	90	68	0.6	70.1	82.2	78.0	220.0	143.0	10.000	2,330	2,220	1.860	2,800	0.66	15,400
BSN50110-DT[2]	50	110	108	0.6	78.1	97.5	188	440.0	299.0	25.800	2,690	3,500	4.920	2,500	2.11	19,100
BSN60110-DT	60	110	90	0.6	83.1	99.3	140.0	375.0	251.0	25.800	2,500	3,500	3.640	2,400	0.50	20,900

(1) Starting torque indicates torque due to the preload of the bearing only. If you need further information please consult NSK

(2) Heavy series

(3) Limiting axial load is defined as the maximum load whose large contact ellipse between the ball and raceway does not cause overriding of the shoulder of the raceway groove

(4) Tolerances are valid for all sizes except for sizes mentioned in the sketch

BALL SCREW SUPPORT BEARINGS: BSBD SERIES

BSF-DT SERIES

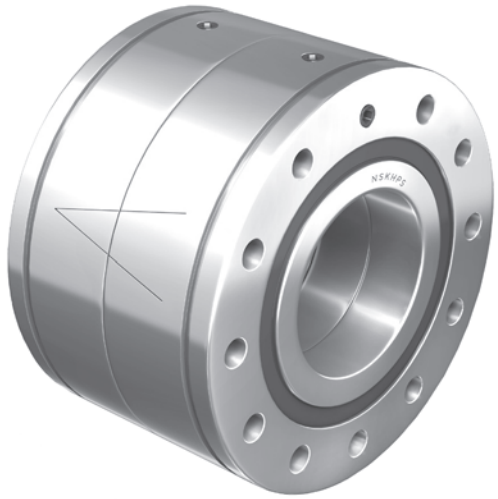

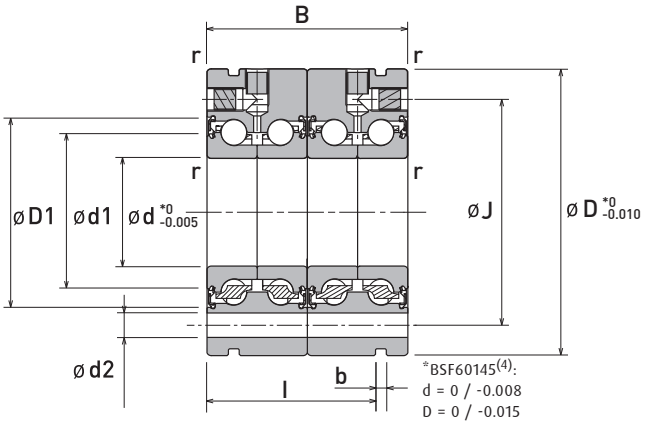

Design I

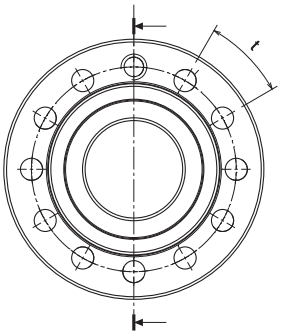

Design II

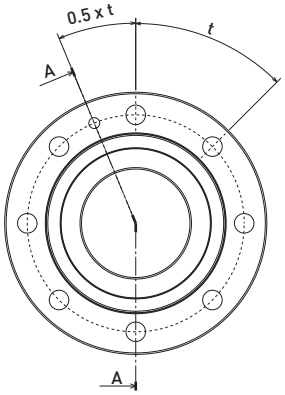

Bearing Numbers	Boundary Dimensions (mm)				Reference Dimensions (mm)							Fixing screws		Basic Dynamic Load Rating (kN)	Basic Static Load Rating (kN)	Limiting Axial Load(3) (kN)	Inertia (kg·cm²)	Axial Rigidity (N/μm)	Tilting rigidity (Nm/mrad)	Mass (kg)	Limiting Speed (min⁻¹)	Starting torque(1) (Nm)	Recommended Clamping Force (N)	Design
	d	D	B	r (min)	d_1	D_1	J	d_2	l	b	t	Size	Qty								Grease			
BSF1762-DT	17	62	50	0.6	28.1	37.7	48	6.8	42	3	6 x 60º	M6	5	33.0	59.5	42.5	0.260	790	175	0.890	6,700	0.10	4,400	I
BSF2068-DT	20	68	56	0.6	32.6	43.0	53	6.8	47	3	8 x 45º	M6	7	43.0	82.0	58.5	0.516	1,180	320	1.170	5,800	0.26	7,600	I
BSF2575-DT	25	75	56	0.6	37.6	48.0	58	6.8	47	3	8 x 45º	M6	7	46.0	96.0	68.0	0.826	1,370	460	1.460	5,100	0.32	8,100	I
BSF3080-DT	30	80	56	0.6	42.6	53.0	63	6.8	47	3	12 x 30º	M6	11	49.0	111.0	77.0	1.248	1,580	620	1.580	4,500	0.37	8,600	I
BSF30100-DT(2)	30	100	76	0.6	49.1	64.4	80	8.8	68	3	8 x 45º	M8	8	98.0	188.0	133.0	3.600	1,800	990	3.420	3,900	1.17	11,100	II
BSF3590-DT	35	90	68	0.6	53.1	62.2	75	8.8	59	3	8 x 45°	M8	7	68.0	155.0	104.0	2.820	1,630	900	2.300	3,800	0.41	13,500	I
BSF40100-DT	40	100	68	0.6	55.1	67.2	80	8.8	59	3	8 x 45º	M8	7	72.0	176.0	117.0	3.900	1,850	1,200	2.880	3,500	0.49	14,100	I
BSF40115-DT(2)	40	115	92	0.6	63.1	80.1	94	8.8	82	3	12 x 30º	M8	12	128.0	269.0	182.0	10.400	2,300	2,000	5.120	3,100	2.03	18,700	II
BSF50115-DT	50	115	68	0.6	70.1	82.2	94	8.8	59	3	12 x 30º	M8	11	78.0	220.0	143.0	10.000	2,330	2,220	3.620	2,800	0.66	15,400	I
BSF50140-DT(2)	50	140	108	0.6	78.1	97.5	113	11	99	3	12 x 30º	M10	12	188.0	440.0	299.0	29.000	2,690	3,560	8.920	2,500	2.11	19,100	II

(1) Starting torque indicates torque due to the preload of the bearing only. If you need further information please consult NSK
(2) Heavy series
(3) Limiting axial load is defined as the maximum load whose large contact ellipse between the ball and raceway does not cause overriding of the shoulder of the raceway groove
(4) Tolerances are valid for all sizes except for sizes mentioned in the sketch

PRECISION DEEP GROOVE BALL BEARINGS

Type
6: Single Row Radial Ball Bearing

Bore Code
(04 upwards, multiply by 5 to obtain bore size in mm)
00: 10 mm **02:** 15 mm
01: 12 mm **03:** 17 mm

Cage Material
T: Phenolic Resin
M: Brass
TN/TNH: Polyamide

Radial Internal Clearance
Standard R.I.C.: C1
C2
CN
C3
C4
Special R.I.C.: R**
Special Axial fit: A**

6	0	10		T	B	CN	P4

Dimension Series			
RHP	ISO	RHP	ISO
		2	02
0	10	3	03

Construction
Blank: Normal Type
S: Ceramic Ball Type

Location
B: Inner Ring Guided
A: Outer Ring Guided
BH: Inner Ring Guided

Precision Grade		
RHP	ISO	ABEC
P5	5	5
P4	4	7
P3	Dimensional Accuracy P4	Running Accuracy P2
P2	2	9

• Denotes standard feature, no indicator necessary
** Denotes mean figure given in µm

Please refer to the bearing tables for exact part number options

INTERCHANGE

Description		Interchange		
		NSK	FAF/TIMKEN	Barden
Part Number	ISO 19	69xx	---	---
	ISO 10	60xx	91xxK	1xx
	ISO 02	62xx	2xxK	2xx
	ISO 03	63xx	3xxK	---
Prefixes / Suffixes	Polyamide Cage	T1X	PRB	TMT
	High Speed Polyamide Cage	TYA	---	---
	Phenolic Cage	T	CR	T
	Shield	Z	---	S
	Non-contact Seal	V	V	A
	Contact Seal	(D)DU	---	Y
	Radial Clearance (Loose)	C3	P	(K)5
	ABEC 7 Precision	P4	MM	---

The competitive manufacturers are provided for a convenient source of unit substitution. They can be considered interchangeable in most instances, but for special applications, please contact NSK. NSK assumes no liability with respect to errors or omissions.

APPLICATIONS

› Woodworking Spindles › Light Duty Precision Vertical Milling Spindles › Machining Center Spindles

PRECISION DEEP GROOVE BALL BEARINGS: 60 & 62 SERIES

BORE DIAMETER 20-120MM

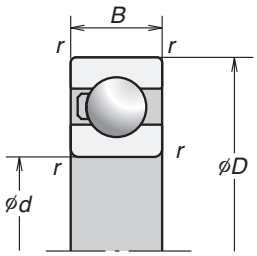

Bearing Number	Boundary Dimensions								Basic Load Ratings				Limiting Speeds (RPM)	
	d		D		B		r		C_r		C_{or}		Grease	Oil
	mm	inch	mm	inch	mm	inch	mm	inch	N	lbs	N	lbs		
6004T	20	0.7874	42	1.6535	12	0.4724	0.6	0.024	9380	2110	5030	1130	32000	48000
6204T	20	0.7874	47	1.8504	14	0.5512	1.0	0.039	12800	2880	6580	1480	35000	44000
6005T	25	0.9843	47	1.8504	12	0.4724	0.6	0.024	10100	2270	5850	1320	27000	45200
6205T	25	0.9843	52	2.0472	15	0.5906	1.0	0.039	14000	3150	7830	1760	26000	42800
6006T	30	1.1811	55	2.1654	13	0.5118	1.0	0.039	13200	2970	8270	1860	23000	40000
6206T	30	1.1811	62	2.4409	16	0.6299	1.0	0.039	19500	4400	11300	2540	21000	37300
6007T	35	1.3780	62	2.4409	14	0.5512	1.0	0.039	16000	3600	10300	2320	22000	35800
6207T	35	1.3780	72	2.8346	17	0.6693	1.0	0.039	25700	5800	15300	3450	18500	32700
6008T	40	1.5748	68	2.6772	15	0.5906	1.0	0.039	16800	3800	11500	2590	21000	32400
6208T	40	1.5748	80	3.1496	18	0.7087	1.0	0.039	29100	6550	17900	4000	16600	26700
6009T	45	1.7717	75	2.9528	16	0.6299	1.0	0.039	19900	4450	14000	3150	18800	29000
6209T	45	1.7717	85	3.3465	19	0.7480	1.0	0.039	32700	7350	20400	4600	15300	26000
6010T	50	1.9685	80	3.1496	16	0.6299	1.0	0.039	20800	4700	15400	3450	17300	26700
6210T	50	1.9685	90	3.5433	20	0.7874	1.0	0.039	35100	7900	23200	5200	14300	24200
6011T	55	2.1654	90	3.5433	18	0.7087	1.0	0.039	28300	6350	21200	4750	16700	23800
6211T	55	2.1654	100	3.9370	21	0.8268	1.5	0.059	43400	9750	29200	6550	12000	21900
6012T	60	2.3622	95	3.7402	18	0.7087	1.0	0.039	29400	6600	23200	5200	15700	21900
6212T	60	2.3622	110	4.3307	22	0.8661	1.5	0.059	52500	11800	36000	8100	11700	19700
6013T	65	2.5591	100	3.9370	18	0.7087	1.0	0.039	29200	6550	23500	5300	13300	20600
6213T	65	2.5591	120	4.7244	23	0.9055	1.5	0.059	57500	12900	40000	9000	10800	17800
6014T	70	2.7559	110	4.3307	20	0.7874	1.0	0.039	38100	8550	30900	6950	11900	18400
6214T	70	2.7559	125	4.9213	24	0.9449	1.5	0.059	62000	13900	44000	9900	10200	16700
6015T	75	2.9528	115	4.5276	20	0.7874	1.0	0.039	37800	8500	31200	7000	11100	17200
6215T	75	2.9528	130	5.1181	25	0.9843	1.5	0.059	66000	14800	49000	11000	10100	15600
6016T	80	3.1496	125	4.9213	22	0.8661	1.0	0.039	47600	10700	39700	8900	10200	15700
6216T	80	3.1496	140	5.5118	26	1.0236	2.0	0.079	72500	16300	53000	11900	9200	14300
6017T	85	3.3465	130	5.1181	22	0.8661	1.0	0.039	47500	10700	40000	9000	9500	14700
6217T	85	3.3465	150	5.9055	28	1.1024	2.0	0.079	84000	18900	62000	13900	8500	13100
6018T	90	3.5433	140	5.5118	24	0.9449	1.5	0.059	58200	13100	49600	11200	8700	13500
6019T	95	3.7402	145	5.7087	24	0.9449	1.5	0.059	58000	13000	50000	11200	8100	12600
6020T	100	3.9370	150	5.9055	24	0.9449	1.5	0.059	60000	13500	54000	12100	7800	12000
6022T	110	4.3307	170	6.6929	28	1.1024	2.0	0.079	85000	19100	73000	16400	6500	10100
6024T	120	4.7244	180	7.0866	28	1.1024	2.0	0.079	88000	19800	80000	18000	6100	9400

C_r = Dynamic Radial Load Rating

C_{or} = Static Radial Load Rating

PRECISION DEEP GROOVE BALL BEARINGS: 63 SERIES

BORE DIAMETER 20-90MM

SINGLE ROW RADIAL BALL BEARINGS

Bearing Number	Primary Dimensions						Abutment Dimension max. fillet radius		Basic Load Ratings				Limiting Speeds (RPM)	
	d		D		B		r		C_r		C_{or}		Grease	Oil
	mm	inch	mm	inch	mm	inch	mm	inch	N	lbs	N	lbs		
6304 TB	20	0.787	52	2.047	15	0.591	1.0	0.039	15900	3574	7800	1754	41000	27000
6305 TB	25	0.984	62	2.441	17	0.669	1.0	0.039	20600	4631	11700	2630	31600	23000
6306 TB	30	1.181	72	2.835	19	0.748	1.0	0.039	29600	6654	16600	3732	26800	19500
6307 TB	35	1.378	80	3.150	21	0.827	1.5	0.059	33300	7486	19100	4294	23000	15000
6308 TB	40	1.575	90	3.543	23	0.906	1.5	0.059	44400	9982	26100	5868	20700	13500
6309 TB	45	1.772	100	3.937	25	0.984	1.5	0.059	52800	11870	31700	7126	18500	12000
6310 TB	50	1.969	110	4.331	27	1.063	2.0	0.079	61800	13893	37900	8520	16600	10800
6311 TB	55	2.165	120	4.724	29	1.142	2.0	0.079	71500	16074	44600	10026	15100	9800
6312 TB	60	2.362	130	5.118	31	1.220	2.0	0.079	81800	18389	52000	11690	13800	9000
6313 TB	65	2.559	140	5.512	33	1.299	2.0	0.079	92600	20817	59500	13376	12700	8300
6314 TB	70	2.756	150	5.906	35	1.378	2.0	0.079	104000	23380	68000	15287	11700	7600
6315 TB	75	2.953	160	6.299	37	1.457	2.0	0.079	113000	25403	77000	17310	10900	7100
6316 TB	80	3.150	170	6.693	39	1.535	2.0	0.079	114000	25628	79500	17872	10200	6600
6317 TB	85	3.346	180	7.087	41	1.614	2.5	0.098	133000	29900	96500	21694	9500	6200
6318 TB	90	3.543	190	7.480	43	1.693	2.5	0.098	143000	32148	107000	24055	9000	5800

C_r = Dynamic Radial Load Rating

C_{or} = Static Radial Load Rating

NOTES

LINEAR MOTION

LINEAR GUIDES

Applications I-1
Product Selection Tips I-2
Interchange I-3
Types I-5

NH SERIES (REPLACEMENT FOR LH SERIES, SIZE 15-65)

Nomenclature I-7
AN, BN Models I-9
AL, BL Models I-11
EM, GM Models I-13

NS SERIES (REPLACEMENT FOR LS SERIES)

Nomenclature I-15
CL, AL Models I-17
JM, EM Models I-19

PU SERIES

Nomenclature I-21
TR, AR, AL, UR, BL Models I-23

PE SERIES

Nomenclature I-25
AR, TR, UR, BR Models I-27

LW SERIES

Nomenclature I-29
EL Model I-31

RA SERIES

Nomenclature I-33
AN, BN Models I-35
AL, BL Models I-37
EM, GM Models I-39

Assembly and Mounting I-41
Grease I-43
K1™ Maintenance-Free Lubrication System I-47
Unit Conversions I-52

PRECISION GROUND BALL SCREW

Nomenclature I-53
Specification Sheet for New Applications I-54

COMPACT FA QUICKSHIP BALL SCREWS

Features I-55
Availability I-56

ROLLED BALL SCREW

Nomenclature I-57
Product Classification I-58

BALL SCREW SUPPORT UNITS

Nomenclature I-59
Categories I-60
Support Units for Light Load I-61
Support Units for Heavy Load I-61
Support Units for Light Load and Small Equipment I-62

MONOCARRIER™

Features I-63
Applications I-64

MCM SERIES MONOCARRIER™

Nomenclature I-65
Applications I-65
Accuracy Grade and Limitations I-66
Standard Combinations of Stroke and Ball Screw Lead I-67
Basic Load Rating I-68

MCH SERIES MONOCARRIER™

Nomenclature I-69
Applications I-69
Accuracy Grade and Limitations I-70
Standard Combinations of Stroke and Ball Screw Lead I-71
Basic Load Rating I-72

LINEAR GUIDES

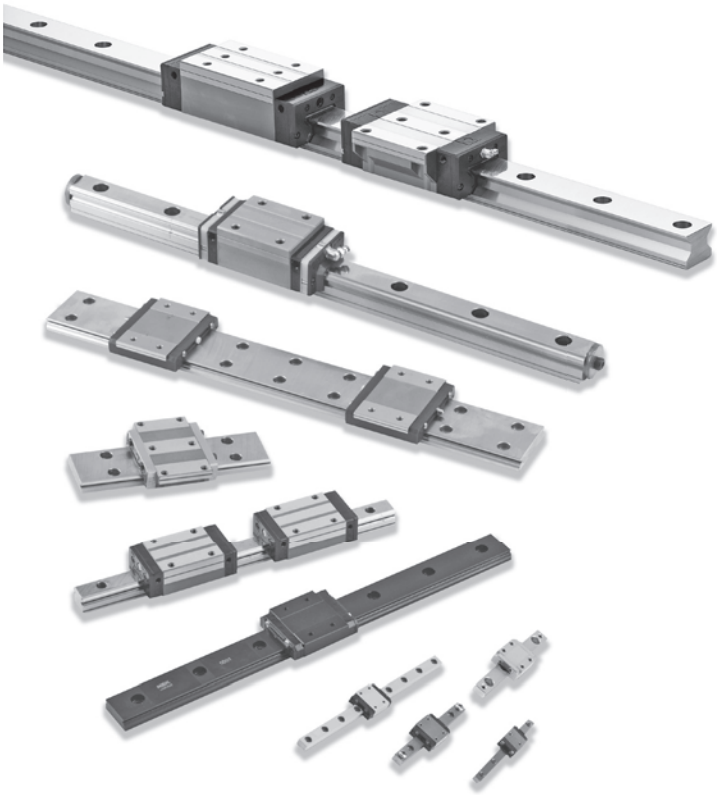

Linear Guides are designed for high precision motion and control applications. They provide greater rigidity and higher load capacity than shaft and bushing designs.

The LH & LS Series (except sizes LH08, 10, and 12) have been discontinued and replaced by NSK's next generation NH and NS Linear Guide series, which are dimensionally interchangeable with the LH and LS series, respectively. The NH and NS Linear Guides have an improved internal design that increases load ratings, lowers noise, improves smoothness, and increases high-speed capabilities.

The NH and NS Linear Guides are completely interchangeable with the LH and LS series, respectively. When replacing individual LAH or LAS sliders (carriages), the new NAH or NAS sliders (carriages) can be installed on the existing NSK L1H or L1S rails.

Some of the industries served - machine tool, robotics, medical and aerospace - require smooth travel and high accuracy.

APPLICATIONS

› **Machine Tool (CNC, EDM, Laser Cutting, Water Jet, Lathes)** › **Woodworking (Routers)** › **Glasscutting** › **Testing Equipment**
› **Medical (Diagnostic Equipment, Lab Automation, Genomics, Biotechnology)** › **CMM** › **Factory Automation**
› **Semiconductor (Wafer Handling, PCB Drilling, LCD Etching, Testing Equipment)**

LINEAR GUIDE PRODUCT SELECTION TIPS

To help in the selection of linear guides, NSK has come up with a series of questions that need to be asked in order to determine the appropriate NSK product.

- What is the application?
- What is the NSK or competitor parts number?
- What type of carriage or bearing style is needed for this application: Tapped or Through Hole, Square or Flange style?
- What is the rail length required for this application?
- How many carriages or bearings are needed per rail?
- Are there any special accuracy and preload requirements?
- What are the loading conditions of the application? Please provide both Static & Dynamic loads.
- What are the delivery requirements?
- Can you provide us with a drawing of the part to be purchased?
- Lubrication Method - Is the K1™ lubrication system of interest for this application?
- What is the G dimension of rail?

G Dimension Information: A G dimension is required to assure proper mounting to existing application. The G dimension is the measurement from start of the rail to the center of the first bolt hole. In instances where rail will be butted together, please contact NSK for assistance.

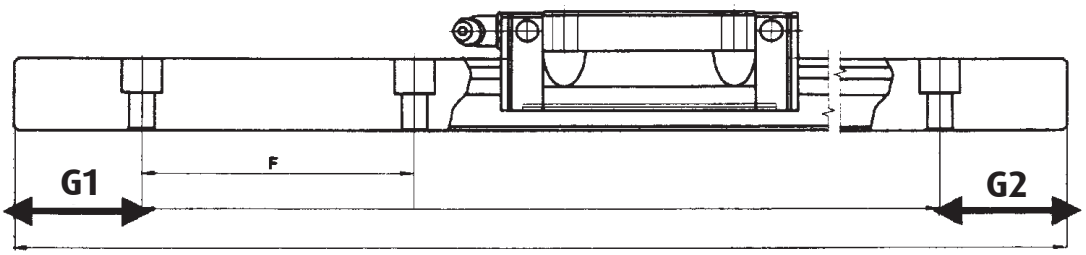

LINEAR GUIDES INTERCHANGE

| Description | Interchange | | |

4 - LINEAR GUIDE RAIL LENGTH (MM) ## = SIZE (RAIL WIDTH) XXXX = LENGTH

NSK	THK	THOMSON		SKF	BOSCH - REXROTH (STAR)	INA
		Old	New			
N1H##XXXXZ	HSR##+XXXXL	RG##NLXXXX	521H##A+XXXX	LLRHR##xXXXXP5	R1605-###-XXXX[1]	TKVD##-##/XXXX[2]
N1S##XXXXZ	SR##+XXXXL			LLRHR##xXXXXP5	R1605-###-XXXX[1]	TKVD##-##/XXXX[2]
L1W##XXXXZ	HRW##+XXXXL				R1605-###-XXXX	TKVD##-W-##/XXXX
P1U##XXXXZ	RSR##+XXXXL	RD##HLXXXX	TSR##Z+XXXX	LLMHR##xXXXXP5	R0445-###-XXXX	TKDM##-##/XXX
P1E##XXXXZ	RSR##W+XXXXL		TSR##WZ+XXXX	LLMWR##xXXXXP5	R0455-###-XXXX	

[1] See Slider Section for Exact Series for Bosch - Rexroth (STAR)
[2] See Slider and Rail Section for Exact Series for INA

5 - SLIDERS

The number following the carriage style equals the number of carriages per rail.

6 - ACCURACY CLASS

NSK	THK	THOMSON	SKF	BOSCH - REXROTH (STAR)	INA
PC (interchangeable)	BLANK	N	P5	4- (N)	G3
P6	H	H	P3	3- (H)	
P5	P	P	P1	2- (P)	G2
P4	SP	S	P01	1- (XP/SP)	G1
P3	UP	U	P001	9- (UP)	

7 - PRELOAD

NSK (Matched Assembly)	THK	THOMSON		SKF	BOSCH - REXROTH (STAR)	INA
		Old	New			
T or Z0	BLANK	A	0	T0	-#9#	
Z or Z1	C1	B	1	T1	-#1#	V1
Z2	C1	B	1	T1	-#2#	V2
H or Z3	C0	C	2	T2	-#3#	V3
Z4	C0	C	3	T3		V4

8 - SEALS

NSK	THK	THOMSON		SKF	BOSCH - REXROTH (STAR)	INA
		Old	New			
Standard (End Seals)	UU-End Seals		Standard	Standard	-10 or -20 or -22	
Standard (Side Seals)	SS-Side Seals+End Seals	LDS	Standard	Standard	-10 or -20 or -22	
-P (Protector)	ZZ-End, Side, Inner Seals and Scraper	ZZ	Z	S1	None	Separate Part Numbers
-D (Double End Seals)	DD-Double End, Side, and Inner Seals	DD	W	S2	None	
-DP (Double End Seals, Protector)	KK-Double End, Side, Inner Seals and Scraper	KK	WZ	S3	None	

LUBRICATION SYSTEMS

NSK	THK	THOMSON	SKF
-K1™	QZ	LL	Standard
External to the Slider	External to the Slider	External to the Slider	Internal Foam Insert

TYPES OF LINEAR GUIDES

Series	Features
NH Series	
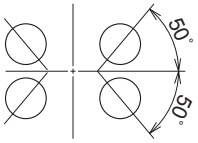	· Replaces the old LH series, size 15-65; Dimensionally equivalent to LH · NSK basic series · General versatility for heavy-duty applications · Large load carrying capacity against vertical direction · Stainless steel is available (#15–30). · Suitable for high speed applications.
NS Series	
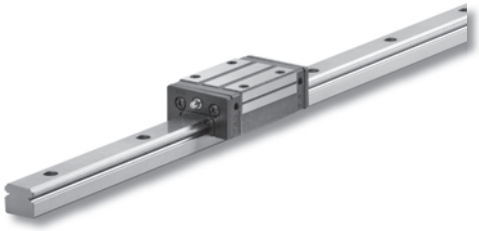 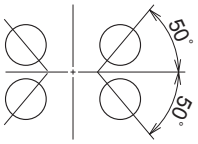	· Replaces the old LS series; Dimensionally equivalent to LS · Compact designed NSK basic series · General versatility for fine application · Large load carrying capacity against vertical direction · Stainless steel is available (#15–35). · Suitable for high speed applications.
RA Series	
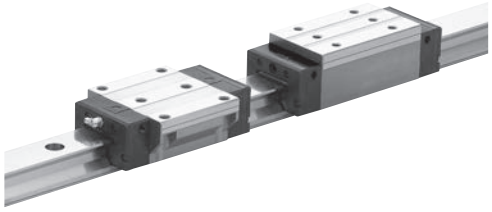 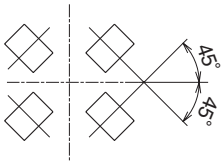	· A roller guide with super high load capacity and rigidity · Super high accuracy and smooth motion · Highly dust proof and maintenance free
LW Series	
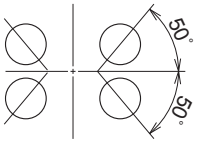	· Wide rail type linear guide · Ideal for use of single rail · Large load carrying capacity against vertical direction
PU Series	
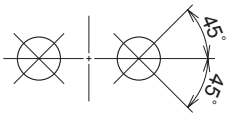	· Lightweight designed miniature linear guide · Reduced noise and smooth motion · High corrosion resistance (stainless steel)
PE Series	
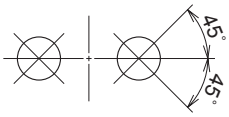	· Lightweight designed wide rail miniature linear guide · Ideal for use of single rail · Reduced noise and smooth motion · High corrosion resistance (stainless steel)

Ball Slide Model				Size & Preload		Dimension Table
AN, BN	AL, BL	AN, AL	BN, BL	Size	Preload	
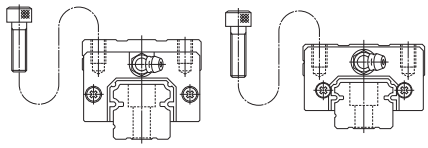		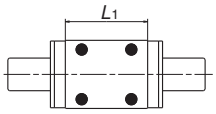	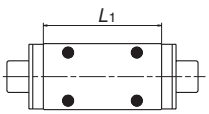	NH	Slight preload ZZ	Page I-9 - I-14
EM, GM		EM	GM			
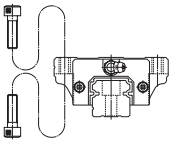		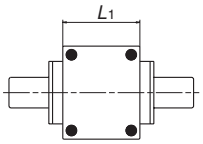	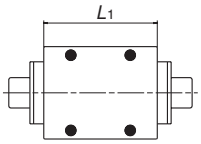			
AL, CL		AL	CL	Size	Preload	Table
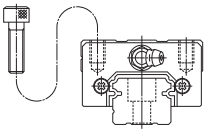		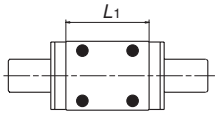	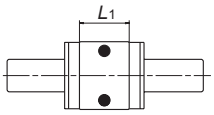	NS	Slight preload ZZ	Page I-17 - I-20
EM, JM		EM	JM			
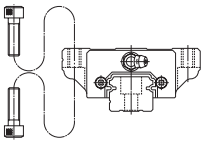		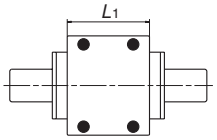	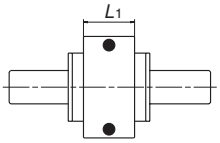			
AL , BL	AN, BN	AL, AN	BL, BN	Size	Preload	Table
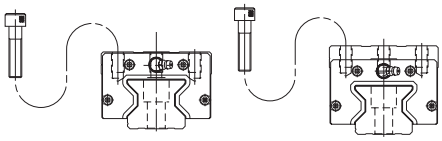		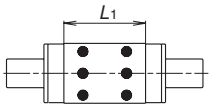	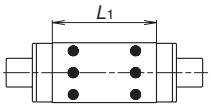	RA15 RA20 RA25 RA30 RA35 RA45 RA55 RA65	Medium preload Z	Page I-35 - I-40
EM, GM		EM	GM			
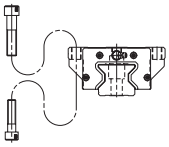		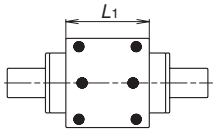	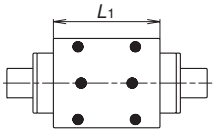			
EL		EL		Size	Preload	Table
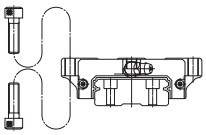		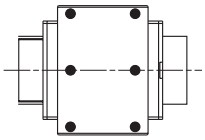		LW17 LW21 LW27 LW35 LW50	Slight preload ZZ	Page I-31 - I-32
AL, TR, UR, BL		AL, TR	BL, UR	Size	Preload	Table
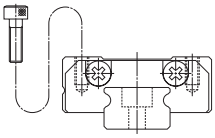		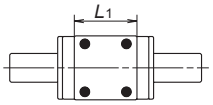	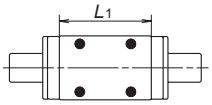	PU05 PU07 PU09 PU12 PU15	Maximum clearance 3 μm ZT	Page I-23 - I-24
AR, TR, UR, BR		AR, TR	BR, UR	Size	Preload	Table
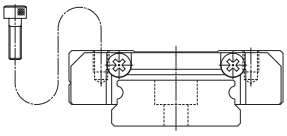		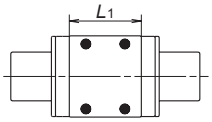	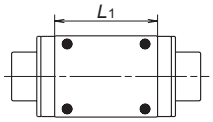	PE05 PE07 PE09 PE12 PE15	Maximum clearance 3 μm ZT	Page I-27 - I-28

Linear Motion

LINEAR GUIDES: NH SERIES
(REPLACEMENT FOR THE LH SERIES, SIZE 15-65)

PART NUMBER EXAMPLE FOR BALL SLIDE ONLY

NAH — **Interchangeable Ball Slide**

30 — **Size**

AN — **Ball Slide Shape Code**

S — **Material Code**
- **S:** Stainless Steel
- **No code:** Special High Carbon Steel

Z — **Preload**
- **Z:** Slight Preload
- **H:** Medium Preload
- **No Code:** Fine Clearance

-K1 — **Option Code**
- **K1:** Equipped With NSK K1™
- **K2:** Two K1™ Lubrication Units
- **D:** Double Seals
- **P:** Protector Plate

REFERENCE PART NUMBER FOR RAIL ONLY

Interchangeable Rail
N1H

30
Size

Rail Length (mm)
1200

S
Material Code
No Code: Special high carbon steel (NSK Standard)
S: Stainless Steel

Preload
Z: Slight Preload
-01Z: Buttable Rail
Z

REFERENCE PART NUMBER FOR INTERCHANGEABLE ASSEMBLY (BALL SLIDE + RAIL)

Series
NH

25
Size

Rail Length (mm)
1000

AN
Shape / Height

Material / Surface Treatment
Blank: Standard Carbon Steel
S: Stainless Steel
A: Carbon Steel + Armoloy
B: Stainless Steel + Armoloy

2
Number of Ball Slides Per Rail

NSK Control Number
(*** is required when making inquiries)
***

PC
Accuracy
PC: Only PC Grade is Available
KC: With NSK K1™

Preload
Z: Slight Preload (standard)
No Code: Slight Clearance
Z

PLASTIC CAP FOR RAIL MOUNTING HOLE

Linear Guide Model No.	Rail Mounting Bolt Size	Cap. No. for Rail Mounting Hole
NH15	M4	L45800004-003
NH20	M5	L45800005-003
NH25	M6	L45800006-003
NH30 NH35	M8	L45800008-003
NH45	M12	L45800012-003
NH55	M14	L45800014-003
NH65	M16	L45800016-003

BRASS CAP FOR RAIL MOUNTING HOLE

Linear Guide Model No.	Rail Mounting Bolt Size	Cap. No. for Rail Mounting Hole
NH20	M5	L45800005-004
NH25	M6	L45800006-004
NH30 NH35	M8	L45800008-004
NH45	M12	L45800012-004

LINEAR GUIDES: NH SERIES
(REPLACEMENT FOR THE LH SERIES)
BALL SLIDE MODELS: AN, BN

FRONT VIEW OF AN AND BN TYPES

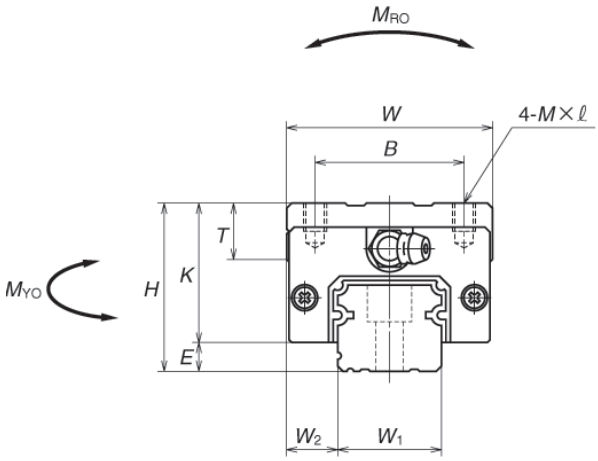

SIDE VIEW OF BN TYPE

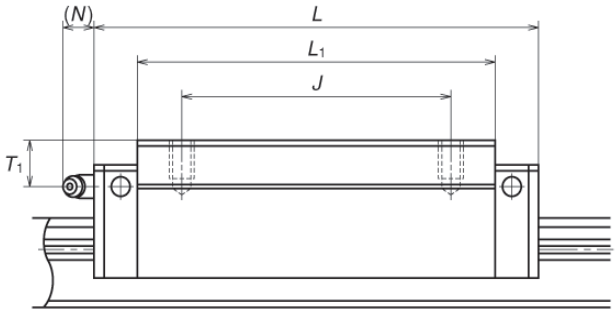

Model No.	Assembly			Ball slide												
	Height			Width	Length	Mounting hole						Grease fitting			Width	Height
	H	E	W_2	W	L	B	J	M×Pitch×ℓ	L_1	K	T	Hole size	T_1	N	W_1	H_1
NH15AN NH15BN	28	4.6	9.5	34	55 74	26	26	M4×0.7×6	39 58	23.4	8	Ø3	8.5	3.3	15	15
NH20AN NH20BN	30	5	12	44	69.8 91.8	32	36 50	M5×0.8×6	50 72	25	12	M6×0.75	5	11	20	18
NH25AN NH25BN	40	7	12.5	48	79 107	35	35 50	M6×1×9	58 86	33	12	M6×0.75	10	11	23	22
NH30AN NH30BN	45	9	16	60	85.6 124.6	40	40 60	M8×1.25×10	59 98	36	14	M6×0.75	10	11	28	26
NH35AN NH35BN	55	9.5	18	70	109 143	50	50 72	M8×1.25×12	80 114	45.5	15	M6×0.75	15	11	34	29
NH45AN NH45BN	70	14	20.5	86	139 171	60	60 80	M10×1.5×17	105 137	56	17	Rc1/8	20	13	45	38
NH55AN NH55BN	80	15	23.5	100	163 201	75	75 95	M12×1.75×18	126 164	65	18	Rc1/8	21	13	53	44
NH65AN NH65BN	90	16	31.5	126	193 253	76	70 120	M16×2×20	147 207	74	23	Rc1/8	19	13	63	53

Notes: 1) External appearance of stainless steel ball slides differs from those of carbon steel ball slides.

SIDE VIEW OF AN TYPE

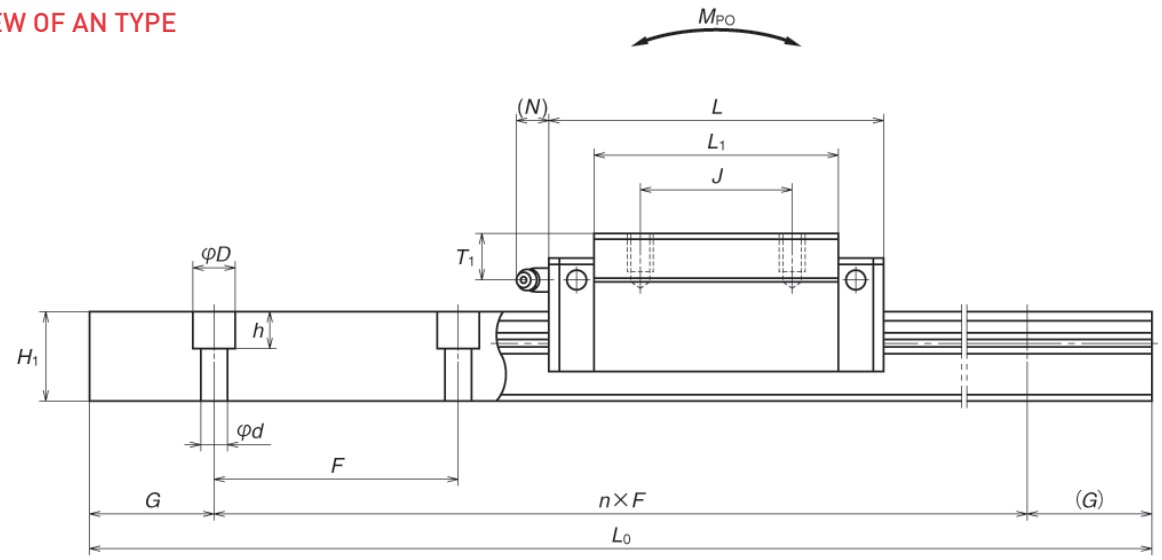

Unit: mm

Rail				Basic load rating								Weight	
Pitch F	Mounting bolt hole d×D×h	G (reference)	Max. length L_{0max} ( ) for stainless	2)Dynamic [50km] C_{50}(N)	2)Dynamic [100km] C_{100}(N)	Static C_0 (N)	Static moment (N·m) M_{RO}	Static moment (N·m) M_{PO} (One slide)	Static moment (N·m) M_{PO} (Two slides)	Static moment (N·m) M_{YO} (One slide)	Static moment (N·m) M_{YO} (Two slides)	Ball slide (kg)	Rail (kg/m)
60	4.5×7.5×5.3	20	2 980 (1 800)	14 200 18 100	11 300 14 400	20 700 32 000	108 166	94.5 216	575 1 150	79.5 181	480 965	0.18 0.26	1.6
60	6×9.5×8.5	20	3 960 (3 500)	23 700 30 000	18 800 24 000	32 500 50 500	219 340	185 420	1 140 2 230	155 355	955 1 870	0.33 0.48	2.6
60	7×11×9	20	3 960 (3 500)	33 500 45 500	26 800 36 500	46 000 71 000	360 555	320 725	1 840 3 700	267 610	1 540 3 100	0.55 0.82	3.6
80	9×14×12	20	4 000 (3 500)	41 000 61 000	32 500 48 500	51 500 91 500	490 870	350 1 030	2 290 5 600	292 865	1 920 4 700	0.77 1.3	5.2
80	9×14×12	20	4 000	62 500 81 000	49 500 64 500	80 500 117 000	950 1 380	755 1 530	4 500 8 350	630 1 280	3 800 7 000	1.5 2.1	7.2
105	14×20×17	22.5	3 990	107 000 131 000	84 500 104 000	140 000 187 000	2 140 2 860	1 740 3 000	9 750 15 600	1 460 2 520	8 150 13 100	3.0 3.9	12.3
120	16×23×20	30	3 960	158 000 193 000	125 000 153 000	198 000 264 000	3 600 4 850	3 000 5 150	16 300 26 300	2 510 4 350	13 700 22 100	4.7 6.1	16.9
150	18×26×22	35	3 900	239 000 310 000	190 000 246 000	281 000 410 000	6 150 8 950	4 950 10 100	27 900 51 500	4 150 8 450	23 400 43 500	7.7 10.8	24.3

2) The basic load rating comply with the ISO standard. (ISO14728-1 and ISO14728-2)
C_{50}: the basic dynamic load rating for 50 km rating fatigue life, C_{100}: the basic dynamic load rating for 100 km rating fatigue life
The basic static load rating shows static permissible load.

LINEAR GUIDES: NH SERIES
(REPLACEMENT FOR THE LH SERIES)
BALL SLIDE MODELS: AL, BL

FRONT VIEW OF AL AND BL TYPES

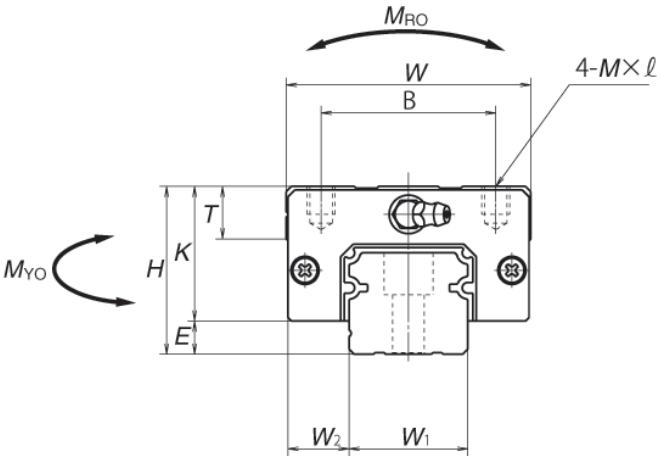

SIDE VIEW OF BL TYPE

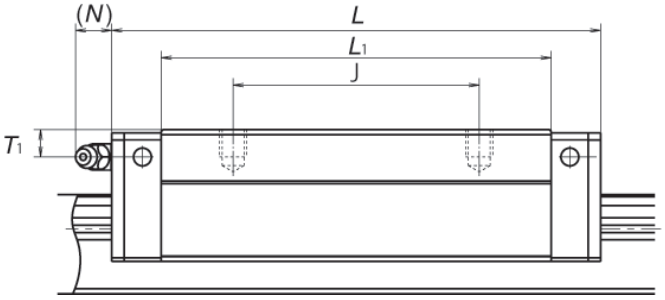

Model No.	Assembly			Ball slide												
	Height			Width	Length	Mounting hole						Grease fitting			Width	Height
	H	E	W_2	W	L	B	J	M×Pitch×ℓ	L_1	K	T	Hole size	T_1	N	W_1	H_1
NH25AL NH25BL	36	7	12.5	48	79 107	35	35 50	M6×1×6	58 86	29	12	M6×0.75	6	11	23	22
NH30AL NH30BL	42	9	16	60	85.6 124.6	40	40 60	M8×1.25×8	59 98	33	14	M6×0.75	7	11	28	26
NH35AL NH35BL	48	9.5	18	70	109 143	50	50 72	M8×1.25×8	80 114	38.5	15	M6×0.75	8	11	34	29
NH45AL NH45BL	60	14	20.5	86	139 171	60	60 80	M10×1.5×10	105 137	46	17	Rc1/8	10	13	45	38
NH55AL NH55BL	70	15	23.5	100	163 201	75	75 95	M12×1.75×13	126 164	55	15	Rc1/8	11	13	53	44

Notes: 1) External appearance of stainless steel ball slides differs from those of carbon steel ball slides.

SIDE VIEW OF AL TYPE

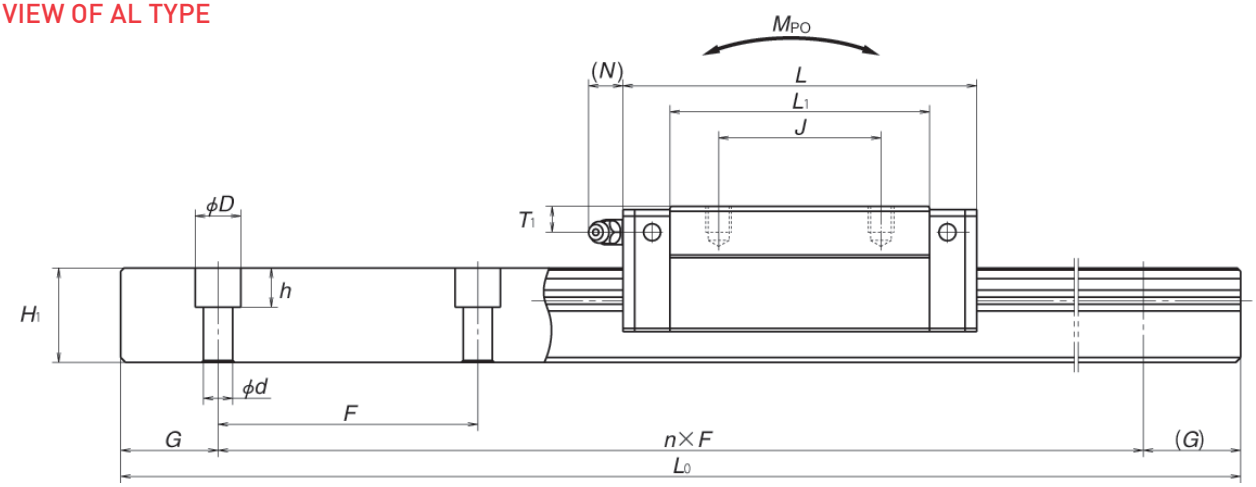

Unit: mm

Rail				Basic load rating								Weight	
Pitch	Mounting bolt hole	G	Max. length	2)Dynamic		Static	Static moment (N·m)					Ball slide	Rail
			L_{0max}	[50km]	[100km]	C_0		M_{PO}		M_{YO}			
F	d×D×h	(reference)	( ) for stainless	C_{50}(N)	C_{100}(N)	(N)	M_{RO}	(One slide)	(Two slides)	(One slide)	(Two slides)	(kg)	(kg/m)
60	7×11×9	20	3 960 (3 500)	33 500 45 500	26 800 36 500	46 000 71 000	360 555	320 725	1 840 3 700	267 610	1 540 3 100	0.46 0.69	3.6
80	9×14×12	20	4 000 (3 500)	41 000 61 000	32 500 48 500	51 500 91 500	490 870	350 1 030	2 290 5 600	292 865	1 920 4 700	0.69 1.16	5.2
80	9×14×12	20	4 000	62 500 81 000	49 500 64 500	80 500 117 000	950 1 380	755 1 530	4 500 8 350	630 1 280	3 800 7 000	1.2 1.7	7.2
105	14×20×17	22.5	3 990	107 000 131 000	84 500 104 000	140 000 187 000	2 140 2 860	1 740 3 000	9 750 15 600	1 460 2 520	8 150 13 100	2.2 2.9	12.3
120	16×23×20	30	3 960	158 000 193 000	125 000 153 000	198 000 264 000	3 600 4 850	3 000 5 150	16 300 26 300	2 510 4 350	13 700 22 100	3.7 4.7	16.9

2) The basic load rating comply with the ISO standard. (ISO14728-1 and ISO14728-2)
C_{50}: the basic dynamic load rating for 50 km rating fatigue life, C_{100}: the basic dynamic load rating for 100 km rating fatigue life
The basic static load rating shows static permissible load.

LINEAR GUIDES: NH SERIES
(REPLACEMENT FOR THE LH SERIES)
BALL SLIDE MODELS: EM, GM

FRONT VIEW OF EM AND GM TYPES

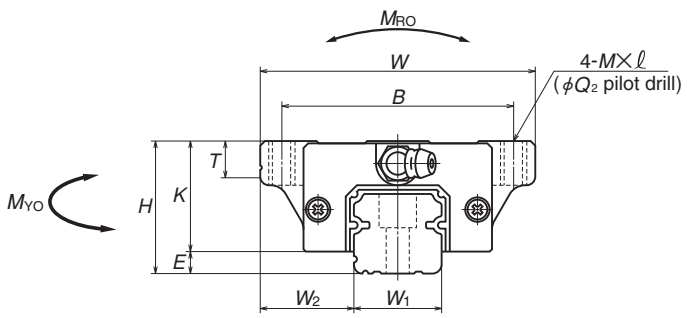

SIDE VIEW OF GM TYPE

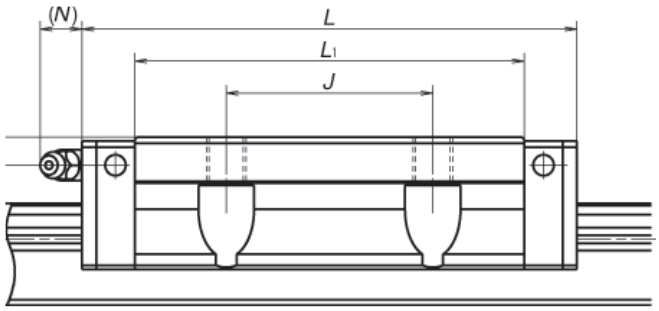

Model No.	Assembly			Ball slide													
	Height			Width	Length	Mounting hole							Grease fitting			Width	Height
	H	E	W_2	W	L	B	J	M×Pitch×ℓ	Q_2	L_1	K	T	Hole size	T_1	N	W_1	H_1
NH15EM NH15GM	24	4.6	16	47	55 74	38	30	M5×0.8×7	4.4	39 58	19.4	8	Ø3	4.5	3.3	15	15
NH20EM NH20GM	30	5	21.5	63	69.8 91.8	53	40	M6×1×9.5	5.3	50 72	25	10	M6×0.75	5	11	20	18
NH25EM NH25GM	36	7	23.5	70	79 107	57	45	M8×1.25×10 (M8×1.25×11.5)	6.8	58 86	29	11 (12)	M6×0.75	6	11	23	22
NH30EM NH30GM	42	9	31	90	98.6 124.6	72	52	M10×1.5×12 (M10×1.5×14.5)	8.6	72 98	33	11 (15)	M6×0.75	7	11	28	26
NH35EM NH35GM	48	9.5	33	100	109 143	82	62	M10×1.5×13	8.6	80 114	38.5	12	M6×0.75	8	11	34	29
NH45EM NH45GM	60	14	37.5	120	139 171	100	80	M12×1.75×15	10.5	105 137	46	13	Rc1/8	10	13	45	38
NH55EM NH55GM	70	15	43.5	140	163 201	116	95	M14×2×18	12.5	126 164	55	15	Rc1/8	11	13	53	44
NH65EM NH65GM	90	16	53.5	170	193 253	142	110	M16×2×24	14.6	147 207	74	23	Rc1/8	19	13	63	53

Notes: 1) Parenthesized dimensions are for items made of stainless steel.
2) External appearance of stainless steel ball slides differs from those of carbon steel ball slides.

SIDE VIEW OF EM TYPE

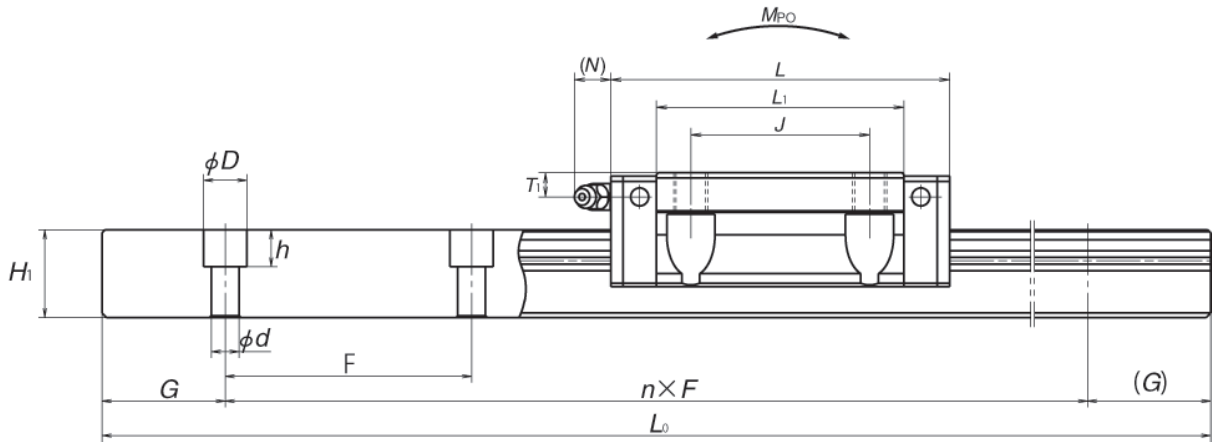

Unit: mm

Rail				Basic load rating								Weight	
Pitch	Mounting bolt hole	G	Max. length	3)Dynamic		Static	Static moment (N·m)					Ball slide	Rail
			L_{0max}	[50km]	[100km]	C_0		M_{PO}		M_{YO}			
F	d×D×h	(reference)	( ) for stainless	C_{50}(N)	C_{100}(N)	(N)	M_{RO}	(One slide)	(Two slides)	(One slide)	(Two slides)	(kg)	(kg/m)
60	4.5×7.5×5.3	20	2 980 (1 800)	14 200 18 100	11 300 14 400	20 700 32 000	108 166	94.5 216	575 1 150	79.5 181	480 965	0.17 0.25	1.6
60	6×9.5×8.5	20	3 960 (3 500)	23 700 30 000	18 800 24 000	32 500 50 500	219 340	185 420	1 140 2 230	155 355	955 1 870	0.45 0.65	2.6
60	7×11×9	20	3 960 (3 500)	33 500 45 500	26 800 36 500	46 000 71 000	360 555	320 725	1 840 3 700	267 610	1 540 3 100	0.63 0.93	3.6
80	9×14×12	20	4 000 (3 500)	47 000 61 000	37 500 48 500	63 000 91 500	600 870	505 1 030	3 150 5 600	425 865	2 650 4 700	1.2 1.6	5.2
80	9×14×12	20	4 000	62 500 81 000	49 500 64 500	80 500 117 000	950 1 380	755 1 530	4 500 8 350	630 1 280	3 800 7 000	1.7 2.4	7.2
105	14×20×17	22.5	3 990	107 000 131 000	84 500 104 000	140 000 187 000	2 140 2 860	1 740 3 000	9 750 15 600	1 460 2 520	8 150 13 100	3 3.9	12.3
120	16×23×20	30	3 960	158 000 193 000	125 000 153 000	198 000 264 000	3 600 4 850	3 000 5 150	16 300 26 300	2 510 4 350	13 700 22 100	5 6.5	16.9
150	18×26×22	35	3 900	239 000 310 000	190 000 246 000	281 000 410 000	6 150 8 950	4 950 10 100	27 900 51 500	4 150 8 450	23 400 43 500	10 14.1	24.3

3) The basic load rating comply with the ISO standard. (ISO14728-1 and ISO14728-2)
C_{50}: the basic dynamic load rating for 50 km rating fatigue life, C_{100}: the basic dynamic load rating for 100 km rating fatigue life
The basic static load rating shows static permissible load.

LINEAR GUIDES: NS SERIES
(REPLACEMENT FOR THE LS SERIES)

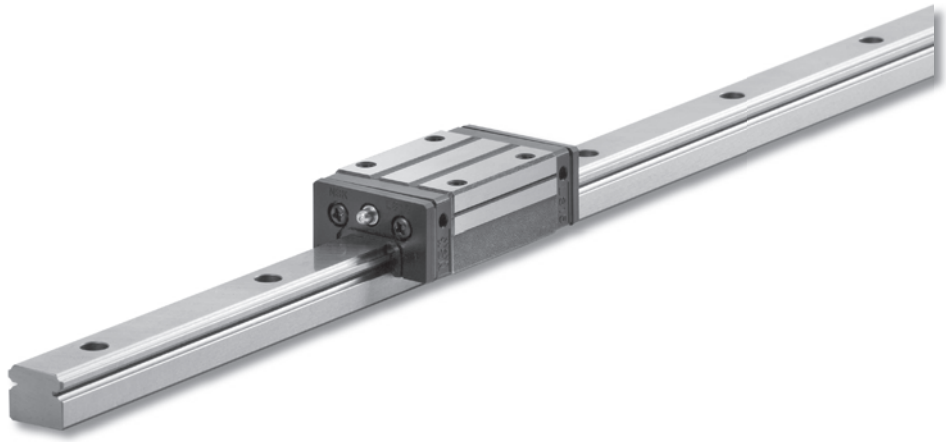

PART NUMBER EXAMPLE FOR BALL SLIDE ONLY

Interchangeable Ball Slide

NAS

30

Size

Ball Slide Shape Code

AL

S

Material Code
S: Stainless Steel
No code: Special High Carbon Steel (NSK standard)

Preload
Z: Slight Preload
No Code: Fine Clearance

Z

-K1

Option Code
K1: Equipped with NSK K1™
K2: Two K1™ Lubrication Units
D: Double Seals
P: Protector Plate

REFERENCE PART NUMBER FOR RAIL ONLY

Interchangeable Rail

N1S

30

Size

Rail Length (mm)

1200

Rail Shape
No Code: Normal
T: The Rail Mounting Bolt Hole M4 for NSI5

Material / Code
No Code: Special High Carbon Steel (NSK Standard)
S: Stainless Steel

S

Z

Preload
Z: Slight Preload
-01Z: Buttable Rail

REFERENCE PART NUMBER FOR ASSEMBLY (BALL SLIDE + RAIL)

Series

NS

25

Size

Rail Length (mm)

1000

AL

Shape / Height

Material / Surface Treatment
Blank: Standard Carbon Steel
S: Stainless Steel
A: Carbon Steel + Armoloy
B: Stainless Steel + Armoloy

2

Number of Ball Slides Per Rail

NSK Control Number
(*** is required when making inquiries)

***

PC

Accuracy
PC: Interchangeable
KC: With NSK K1™

Preload
Z: Slight Preload (standard)
No Code: Slight Clearance

Z

PLASTIC CAP FOR RAIL MOUNTING HOLE

Linear Guide Model No.	Rail Mounting Bolt Size	Cap. No. for Rail Mounting Hole
NS15	M3	L45800003-003
NS20	M5	L45800005-003
NS25	M6	L45800006-003
NS30		
NS35	M8	L45800008-003

BRASS CAP FOR RAIL MOUNTING HOLE

Linear Guide Model No.	Rail Mounting Bolt Size	Cap. No. for Rail Mounting Hole
NS20	M5	L45800005-004
NS25	M6	L45800006-004
NS30		
NS35	M8	L45800008-004

FRONT VIEW OF AL AND CL TYPES

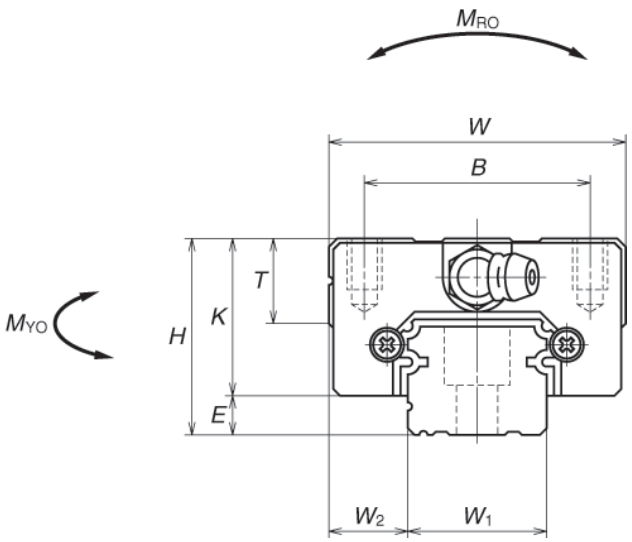

SIDE VIEW OF CL TYPE

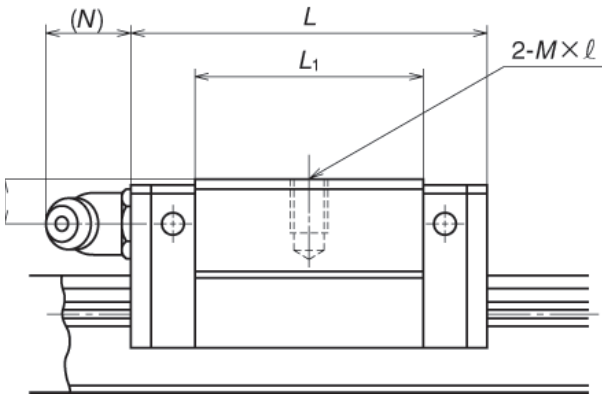

Model No.	Assembly			Ball slide												
	Height			Width	Length	Mounting hole						Grease fitting			Width	Height
	H	E	W_2	W	L	B	J	M×Pitch×ℓ	L_1	K	T	Hole size	T_1	N	W_1	H_1
NS15CL NS15AL	24	4.6	9.5	34	40.4 56.8	26	— 26	M4×0.7×6	23.6 40	19.4	10	Ø3	6	3	15	12.5
NS20CL NS20AL	28	6	11	42	47.2 65.2	32	— 32	M5×0.8×7	30 48	22	12	M6×0.75	5.5	11	20	15.5
NS25CL NS25AL	33	7	12.5	48	59.6 81.6	35	— 35	M6×1×9	38 60	26	12	M6×0.75	7	11	23	18
NS30CL NS30AL	42	9	16	60	67.4 96.4	40	— 40	M8×1.25×12	42 71	33	13	M6×0.75	8	11	28	23
NS35CL NS35AL	48	10.5	18	70	77 108	50	— 50	M8×1.25×12	49 80	37.5	14	M6×0.75	8.5	11	34	27.5

Notes: 1) External appearance of stainless steel ball slides differs from those of carbon steel ball slides.
2) The basic load rating comply with the ISO standard. (ISO14728-1 and ISO14728-2)
C_{50}: the basic dynamic load rating for 50 km rating fatigue life, C_{100}: the basic dynamic load rating for 100 km rating fatigue life
The basic static load rating shows static permissible load.

SIDE VIEW OF AL TYPE

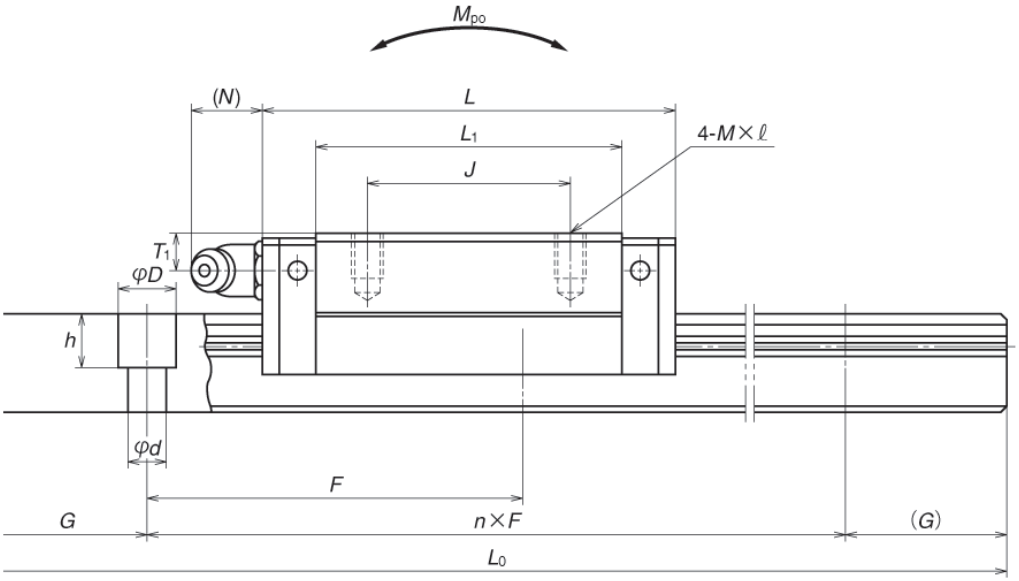

Unit: mm

Rail				Basic load rating									Weight	
Pitch F	Mounting bolt hole d×D×h	G (reference)	Max. length L_{0max} ( ) for stainless	2)Dynamic [50km] C_{50}(N)	2)Dynamic [100km] C_{100}(N)	Static C_0 (N)	Static moment (N·m) M_{RO}	Static moment (N·m) M_{PO} (One slide)	Static moment (N·m) M_{PO} (Two slides)	Static moment (N·m) M_{YO} (One slide)	Static moment (N·m) M_{YO} (Two slides)	Ball slide (kg)	Rail (kg/m)
60	*3.5×6×4.5 4.5×7.5×5.3	20	2 920 (1 700)	7 250 11 200	5 750 8 850	9 100 16 900	45.5 84.5	24.5 77	196 470	20.5 64.5	165 395	0.14 0.20	1.4
60	6×9.5×8.5	20	3 960 (3 500)	10 600 15 600	8 400 12 400	13 400 23 500	91.5 160	46.5 133	330 755	39 111	279 630	0.19 0.28	2.3
60	7×11×9	20	3 960 (3 500)	17 700 26 100	14 000 20 700	20 800 36 500	164 286	91 258	655 1 470	76 217	550 1 230	0.34 0.51	3.1
80	7×11×9	20	4 000 (3 500)	24 700 38 000	19 600 30 000	29 600 55 000	282 520	139 435	1 080 2 650	116 365	905 2 220	0.58 0.85	4.8
80	9×14×12	20	4 000 (3 500)	34 500 52 500	27 300 42 000	40 000 74 500	465 865	220 695	1 670 4 000	185 580	1 400 3 350	0.86 1.3	7.0

*) Standard rail mounting bolt hole for NS15 is specified as hole for M3 (3.5 x 6 x 4.5).
Please contact NSK to request a different hole for M4 (4.5 x 7.5 x 5.3).

FRONT VIEW OF JM AND EM TYPES

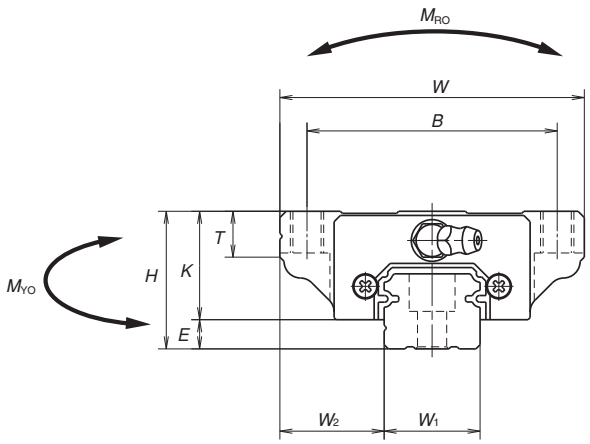

SIDE VIEW OF JM TYPE

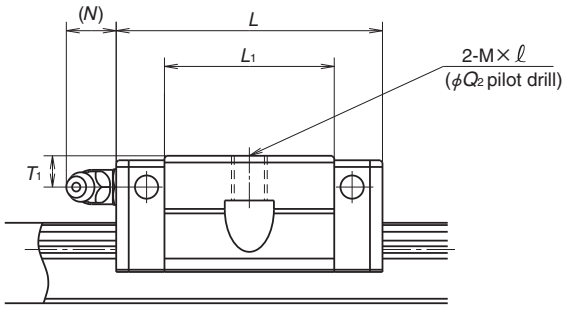

Model No.	Assembly			Ball slide													
	Height			Width	Length	Mounting hole							Grease fitting			Width	Height
	H	E	W_2	W	L	B	J	M×Pitch×ℓ	Q_2	L_1	K	T	Hole size	T_1	N	W_1	H_1
NS15JM NS15EM	24	4.6	18.5	52	40.4 56.8	41	— 26	M5×0.8×7	4.4	23.6 40	19.4	8	Ø3	6	3	15	12.5
NS20JM NS20EM	28	6	19.5	59	47.2 65.2	49	— 32	M6×1×9 (M6×1×9.5)	5.3	30 48	22	10	M6×0.75	5.5	11	20	15.5
NS25JM NS25EM	33	7	25	73	59.6 81.6	60	— 35	M8×1.25×10 (M8×1.25×11.5)	6.8	38 60	26	11 (12)	M6×0.75	7	11	23	18
NS30JM NS30EM	42	9	31	90	67.4 96.4	72	— 40	M10×1.5×12 (M10×1.5×14.5)	8.6	42 71	33	11 (15)	M6×0.75	8	11	28	23
NS35JM NS35EM	48	10.5	33	100	77 108	82	— 50	M10×1.5×13 (M10×1.5×14.5)	8.6	49 80	37.5	12 (15)	M6×0.75	8.5	11	34	27.5

Notes: 1) External appearance of stainless steel ball slides differs from those of carbon steel ball slides.
2) Parenthesized dimensions are for items made of stainless steel.

SIDE VIEW OF EM TYPE

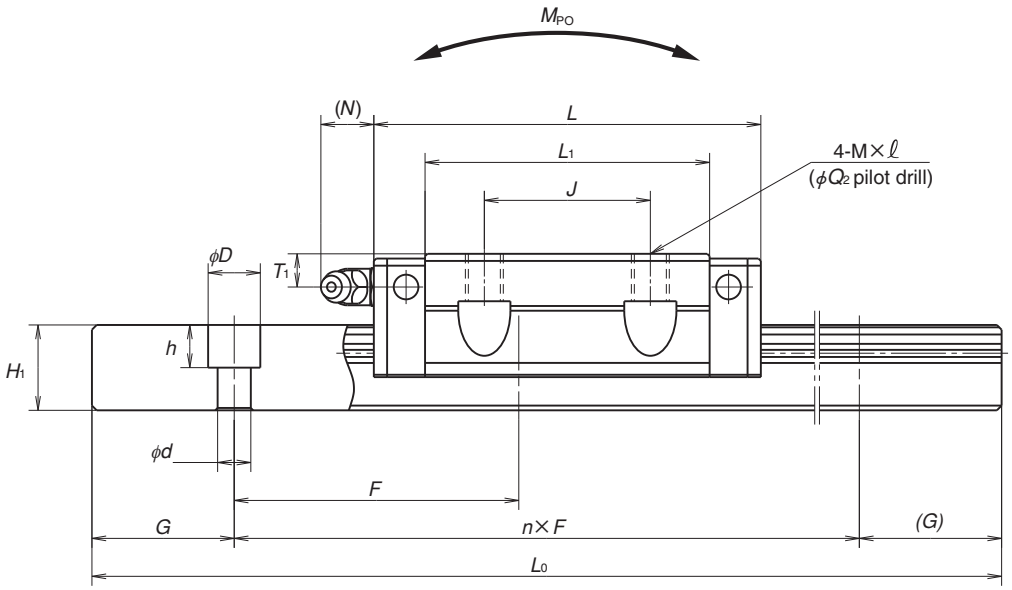

Unit: mm

Rail				Basic load rating								Weight	
Pitch F	Mounting bolt hole d×D×h	G (reference)	Max. length L_{0max} ( ) for stainless	3)Dynamic [50km] C_{50}(N)	3)Dynamic [100km] C_{100}(N)	Static C_0 (N)	Static moment (N·m) M_{RO}	Static moment (N·m) M_{PO} (One slide)	Static moment (N·m) M_{PO} (Two slides)	Static moment (N·m) M_{YO} (One slide)	Static moment (N·m) M_{YO} (Two slides)	Ball slide (kg)	Rail (kg/m)
60	*3.5×6×4.5 4.5×7.5×5.3	20	2 920 (1 700)	7 250 11 200	5 750 8 850	9 100 16 900	45.5 84.5	24.5 77	196 470	20.5 64.5	165 395	0.17 0.26	1.4
60	6×9.5×8.5	20	3 960 (3 500)	10 600 15 600	8 400 12 400	13 400 23 500	91.5 160	46.5 133	330 755	39 111	279 630	0.24 0.35	2.3
60	7×11×9	20	3 960 (3 500)	17 700 26 100	14 000 20 700	20 800 36 500	164 286	91 258	655 1 470	76 217	550 1 230	0.44 0.66	3.1
80	7×11×9	20	4 000 (3 500)	24 700 38 000	19 600 30 000	29 600 55 000	282 520	139 435	1 080 2 650	116 365	905 2 220	0.76 1.2	4.8
80	9×14×12	20	4 000 (3 500)	34 500 52 500	27 300 42 000	40 000 74 500	465 865	220 695	1 670 4 000	185 580	1 400 3 350	1.2 1.7	7

3) The basic load rating comply with the ISO standard. (ISO14728-1 and ISO14728-2)
C_{50}: the basic dynamic load rating for 50 km rating fatigue life, C_{100}: the basic dynamic load rating for 100 km rating fatigue life
The basic static load rating shows static permissible load.
*) Standard rail mounting bolt hole for NS15 is specified as hole for M3 (3.5 x 6 x 4.5).
Please contact NSK to request a different hole for M4 (4.5 x 7.5 x 5.3).

LINEAR GUIDES: PU SERIES

PART NUMBER EXAMPLE FOR BALL SLIDE ONLY

Random-Matching Ball Slide

PAU

15

Size

Shape / Height

AL

S

Material
S: Stainless Steel

Accessories
K1: With NSK K1™

-K1

REFERENCE PART NUMBER FOR RAIL ONLY

Random - Matching Rail
P1U

15
Size

Rail Length (mm)
0470

S
Material / Surface Treatment
S: Stainless Steel

Butting Rail Specification
Z: Non-butting
-01Z: Butting Rail
Z

REFERENCE PART NUMBER FOR ASSEMBLY (BALL SLIDE + RAIL)

Series
PU

15
Size

Rail Length (mm)
0470

AL
Shape / Height

Material / Surface Treatment
K: Stainless Steel
H: Stainless Steel + Surface Treatment
K

2
Number of Ball Slides Per Rail

NSK Control Number
(*** is required when making inquiries)
***

PC
Accuracy
PC: Only PC Grade is Available
K6: With NSK K1™

Preload
T: Fine Clearance (standard)
T

PLASTIC CAP FOR RAIL MOUNTING HOLE

Linear Guide Model No.	Rail Mounting Bolt Size	Cap. No. for Rail Mounting Hole
PU09, PU12, PU15, PE09	M3	L45800003-003

FRONT VIEW

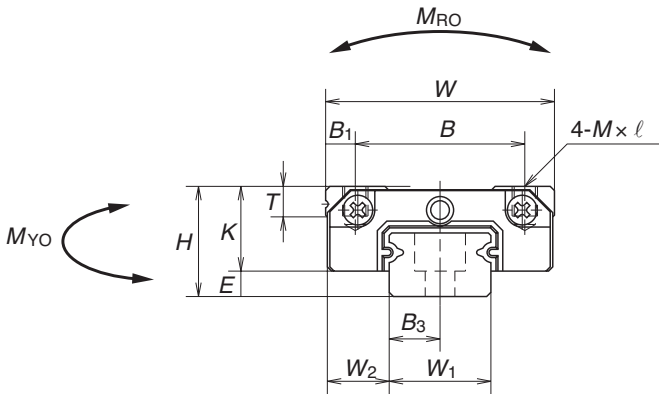

PU09, 12

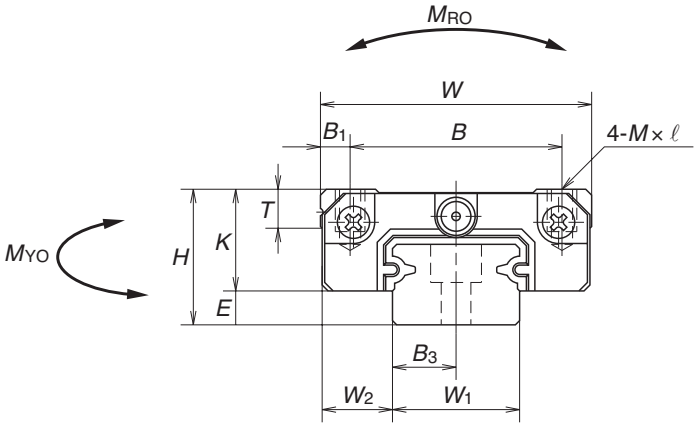

PU15

Model No.	Assembly			Ball Slide												
	Height			Width	Length	Mounting Hole								Grease Fitting		
	H	E	W_2	W	L	B	J	M x pitch x ℓ	B_1	L_1	J_1	K	T	Mounting Hole Size	T_1	N
PU09TR PU09UR	10	2.2	5.5	20	30.0 41.0	15	10 16	M3×0.5×3	2.5	19.6 30.6	4.8 7.3	7.8	2.6	—	—	—
PU12TR PU12UR	13	3.0	7.5	27	35.0 48.7	20	15 20	M3×0.5×3.5	3.5	20.4 34.1	2.7 7.1	10.0	3.4	—	—	—
PU15AL PU15BL	16	4.0	8.5	32	43.0 61.0	25	20 25	M3×0.5×5	3.5	26.2 44.2	3.1 9.6	12.0	4.4	ϕ3	3.2	(3.6)

SIDE VIEW

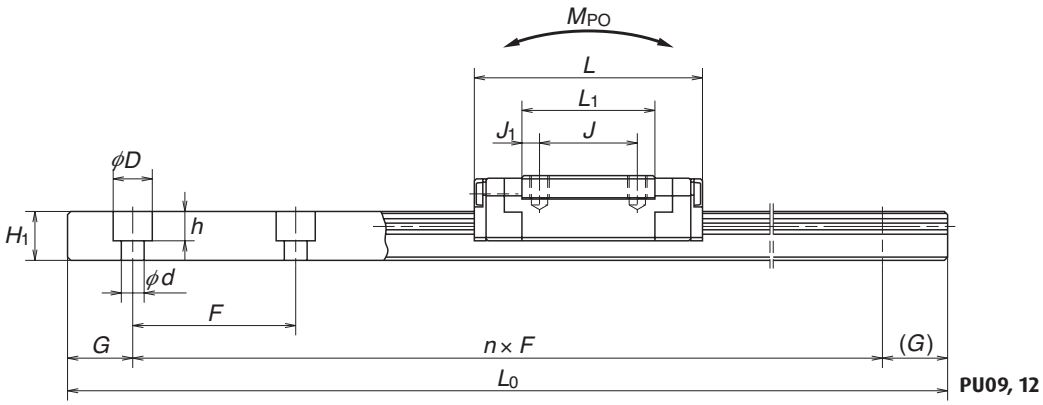

PU09, 12

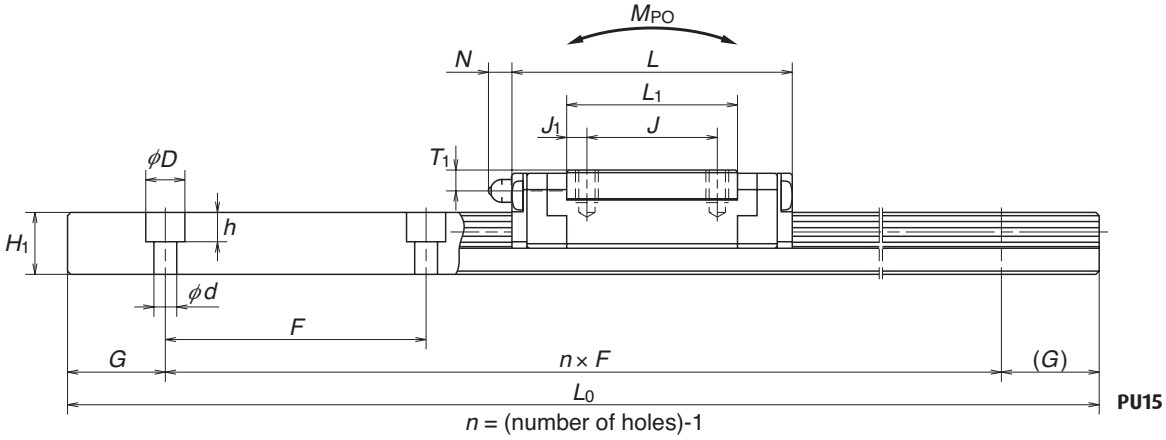

PU15

n = (number of holes)-1

Unit: mm

Rail							Basic Load Rating					Ball Diameter	Weight	
Width	Height	Pitch	Mounting Bolt Hole			Max Length (Single Rail)	Dynamic	Static	Static Moment					
W_1	H_1	F	d x D x h	B_3	G	L_{0max}	C (N)	C_0 (N)	M_{R0} (N•m)	M_{P0} (N•m)	M_{Y0} (N•m)	D_w	Ball Slide (g)	Rail (g/100 mm)
9	5.5	20	3.5×6×4.5	4.5	7.5	600	1490 2100	2150 3500	10.0 16.4	6.1 15.6	6.1 15.6	1.5875	16 25	35
12	7.5	25	3.5×6×4.5	6.0	10.0	800	2830 4000	3500 5700	21.7 35.0	11.4 28.3	11.4 28.3	2.3812	32 53	65
15	9.5	40	3.5×6×4.5	7.5	15.0	1000	5550 8100	6600 11300	49.5 54.5	25.6 69.5	25.6 69.5	3.1750	59 100	105

Note: Basic dynamic load rating C is a load that allows for a 50-km rating fatigue life and is a vertical and constant load on the ball slide mounting surface.
To convert C to C_{100} for a 100-km fatigue life, divide C by 1.26.

LINEAR GUIDES: PE SERIES

PART NUMBER EXAMPLE FOR BALL SLIDE ONLY

Random-Matching Ball Slide

PAE

15

Size

Shape / Height

AL

S

Material
S: Stainless Steel

Accessories
K1: With NSK K1™

-K1

REFERENCE PART NUMBER FOR RAIL ONLY

Random - Matching Rail

P1E

15

Size

Rail Length (mm)

0470

S

Material / Surface Treatment
S: Stainless Steel

Butting Rail Specification
Z: Non-butting
-01Z: Butting Rail

Z

REFERENCE PART NUMBER FOR ASSEMBLY (BALL SLIDE + RAIL)

Series

PE

15

Size

Rail Length (mm)

0470

AL

Shape / Height

Material / Surface Treatment
K: Stainless Steel
H: Stainless Steel + Surface Treatment

K

2

Number of Ball Slides Per Rail

NSK Control Number
(*** is required when making inquiries)

***

PC

Accuracy
PC: Only PC Grade is Available
KC: With NSK K1™

Preload
T: Fine Clearance (standard)

T

PLASTIC CAP FOR RAIL MOUNTING HOLE

Linear Guide Model No.	Rail Mounting Bolt Size	Cap. No. for Rail Mounting Hole
PU09, PU12, PU15, PE09	M3	L45800003-003

FRONT VIEW

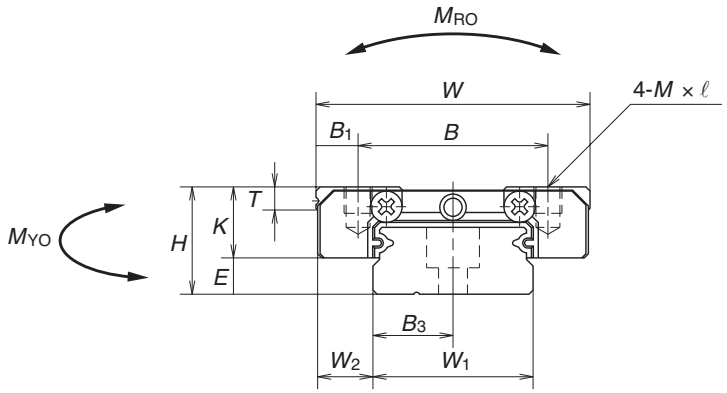

PE09, 12

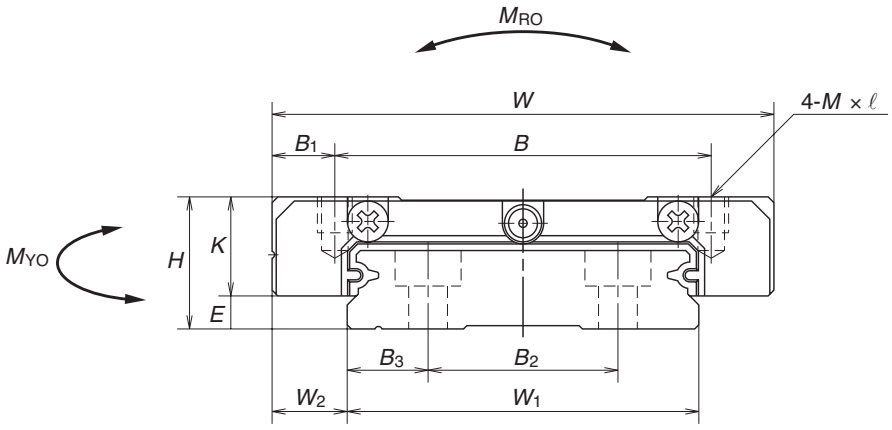

PE15

Model No.	Assembly			Ball Slide												
	Height			Width	Length	Mounting Hole								Grease Fitting		
	H	E	W_2	W	L	B	J	M x pitch x ℓ	B_1	L_1	J_1	K	T	Mounting Hole Size	T_1	N
PE09TR PE09UR	12	4	6	30	39.8 51.2	21 23	12 24	M3×0.5×3	4.5 3.5	26.6 38.0	7.3 7.0	8.0	2.8	—	—	—
PE12AR PE12BR	14	4	8	40	45.0 60.0	28	15 28	M3×0.5×4	6.0	31.0 46.0	8.0 9.0	10.0	3.2	—	—	—
PE15AR PE15BR	16	4	9	60	56.6 76.0	45	20 35	M4×0.7×4.5	7.5	38.4 57.8	9.2 11.4	12.0	4.1	ϕ3	3.2	(3.3)

SIDE VIEW

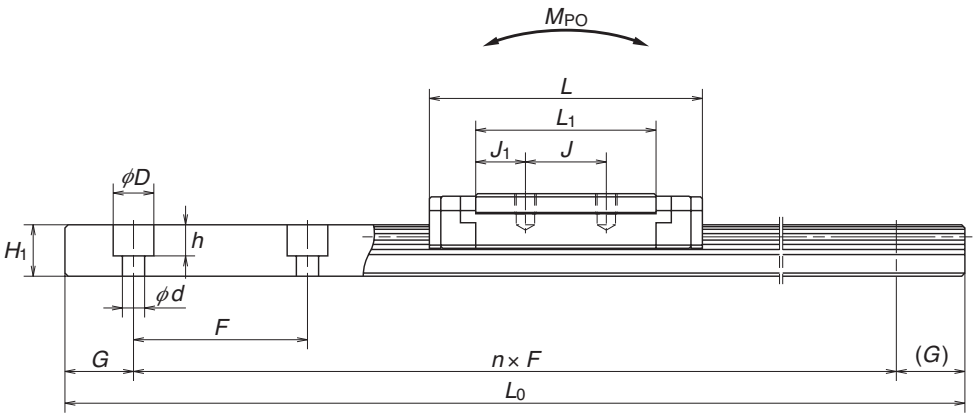

PE09, 12

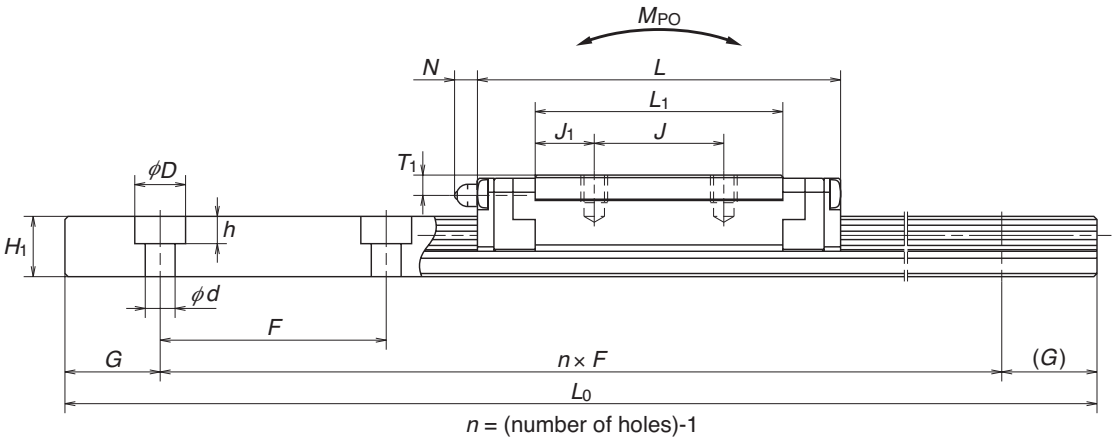

PE15

n = (number of holes)-1

Unit: mm

Rail								Basic Load Rating					Ball Diameter	Weight	
Width	Height		Pitch	Mounting Bolt Hole			Max Length (Single Rail)	Dynamic	Static	Static Moment					
W_1	H_1	B_2	F	d x D x h	B_3	G	L_{0max}	C (N)	C_0 (N)	M_{R0} (N•m)	M_{P0} (N•m)	M_{Y0} (N•m)	D_w	Ball Slide (g)	Rail (g/100m)
18	7.5	—	30	3.5×6×4.5	9.0	10	800	3000 4000	4500 6700	36.5 54.5	17.3 37.5	17.3 37.5	2.000	35 50	95
24	8.5	—	40	4.5×8×4.5	12.0	15	1000	4350 5800	6350 9550	70.5 106.0	29.3 63.5	29.3 63.5	2.381	66 98	140
42	9.5	23	40	4.5×8×4.5	9.5	15	1200	7600 10300	10400 16000	207.0 320.0	59.0 135.0	59.0 135.0	3.175	140 211	275

Note: Basic dynamic load rating C is a load that allows for a 50-km rating fatigue life and is a vertical and constant load on the ball slide mounting surface.
To convert C to C_{100} for a 100-km fatigue life, divide C by 1.26.

LINEAR GUIDES: LW SERIES

PART NUMBER EXAMPLE FOR BALL SLIDE ONLY

Random-Matching Ball Slide

LAW

17

Size

Shape / Height

EL

Z

Preload
Z: Slight Preload (standard)
No Code: Slight Clearance

Accessories
K1: With NSK K1™
F: Fluoride Low-Temperature Chrome Plating + AS2 Grease
F50: Fluoride Low-Temperature Chrome Plating + LG2 Grease

-K1

REFERENCE PART NUMBER FOR RAIL ONLY

Random - Matching Rail

L1W

17

Size

Rail Length (mm)

0950

L

Shape
L: Standard

Material / Surface Treatment

C

N

Butting Rail Specification
N: Non-butting
L: Butting

NSK Control Number
(*** is required when making inquiries)

***

PC

Accuracy
PC: Only PC Grade is Available

Z: Standard

Z

REFERENCE PART NUMBER FOR ASSEMBLY (BALL SLIDE + RAIL)

Series

LW

35

Size

Rail Length (mm)

1000

EL

Shape / Height

Material / Surface Treatment

C

2

Number of Ball Slides Per Rail

NSK Control Number
(*** is required when making inquiries)

***

PC

Accuracy
PC: Only PC Grade is Available
KC: With NSK K1™

Preload
Z: Slight Preload (standard)
No Code: Slight Clearance

Z

PLASTIC CAP FOR RAIL MOUNTING HOLE

Linear Guide Model No.	Rail Mounting Bolt Size	Cap. No. for Rail Mounting Hole
LW17	M4	L45800004-003
LW21	M4	L45800004-003
LW27	M4	L45800004-003
LW35	M6	L45800006-003
LW50	M8	L45800008-003

BRASS CAP FOR RAIL MOUNTING HOLE

Linear Guide Model No.	Rail Mounting Bolt Size	Cap. No. for Rail Mounting Hole
LW17	M4	L45800004-004
LW21	M4	L45800004-004
LW27	M4	L45800004-004
LW35	M6	L45800006-004
LW50	M8	L45800008-004

FRONT VIEW OF EL TYPE

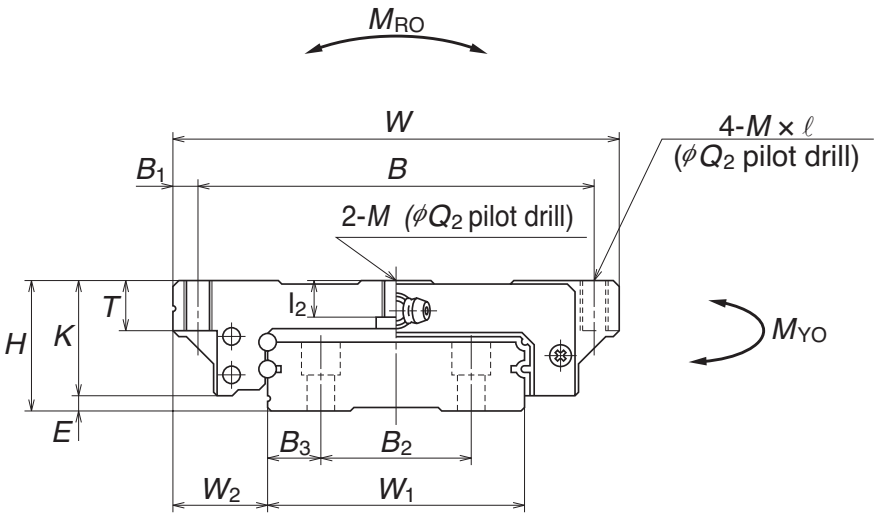

Model No.	Assembly			Ball Slide															
	Height			Width	Length	Mounting Hole											Grease Fitting		
	H	E	W_2	W	L	B	J	M x pitch x ℓ	ℓ_2	Q_2	B_1	L_1	J_1	K	T	Hole Size	T_1	N
LW17EL	17	2.5	13.5	60	51.4	53	26	M4×0.7×6	3.2	3.3	3.5	35	4.5	14.5	6	Ø3	4.0	3
LW21EL	21	3.0	15.5	68	58.8	60	29	M5×0.8×8	3.7	4.4	4.0	41	6.0	18.0	8	M6×0.75	4.5	11
LW27EL	27	4.0	19.0	80	74.0	70	40	M6×1×10	6.0	5.3	5.0	56	8.0	23.0	10	M6×0.75	6.0	11
LW35EL	35	4.0	25.5	120	108.0	107	60	M8×1.25×14	9.0	6.8	6.5	84	12.0	31.0	14	M6×0.75	8.0	11
LW50EL	50	4.5	36.0	162	140.6	144	80	M10×1.5×18	14.0	8.6	9.0	108	14.0	45.5	18	Rc1/8	14.0	14

SIDE VIEW OF EL TYPE

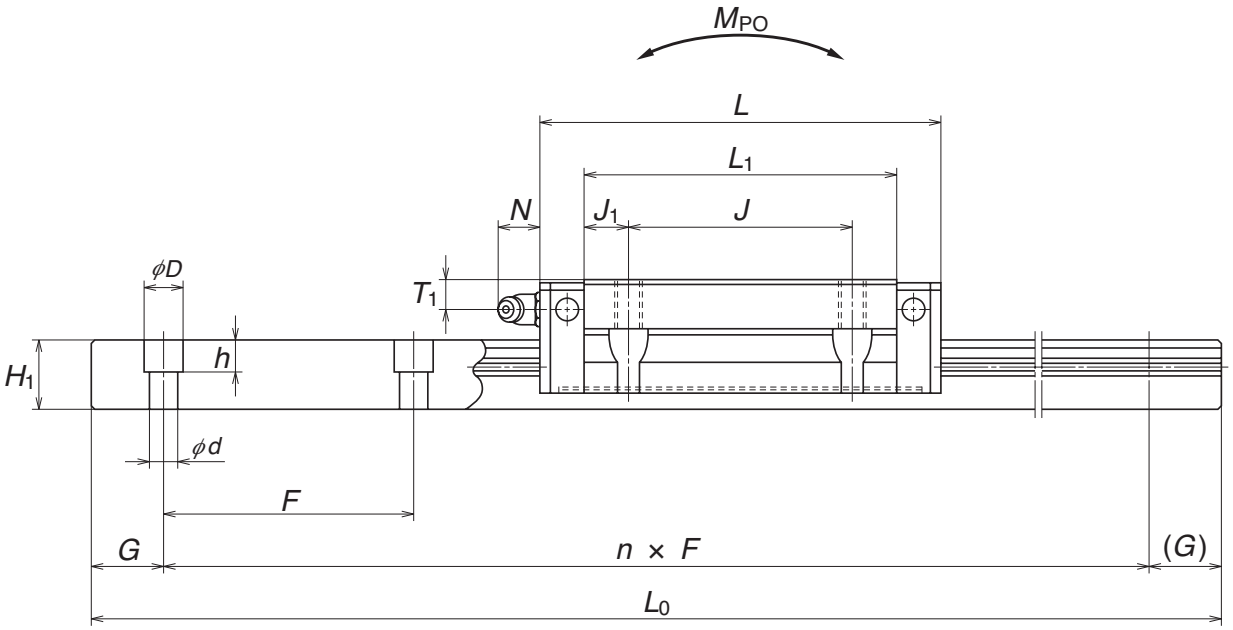

n = (number of holes)-1

Unit: mm

Rail								Basic Load Rating					Ball Diameter	Weight	
Width	Height		Pitch	Mounting Bolt Hole d x D x h		G (recommended)	Max length (Single Rail) L_{0max}	Dynamic	Static	Static Moment				Ball Slide (kg)	Rail (kg/m)
W_1	H_1	B_2	F		B_3			C (N)	C_0 (N)	M_{R0} (N•m)	M_{P0} (N•m)	M_{Y0} (N•m)	D_w		
33	8.7	18	40	4.5×7.5×5.3	7.5	15	1000	5600	11300	135	44.0	37	2.381	0.2	2.1
37	10.5	22	50	4.5×7.5×5.3	7.5	15	1600	6450	13900	185	65.5	55	2.381	0.3	2.9
42	15.0	24	60	4.5×7.5×5.3	9.0	20	2000	12800	26900	400	171.0	143	3.175	0.5	4.7
69	19.0	40	80	7×11×9	14.5	20	2400	33000	66500	1690	645.0	545	4.762	1.5	9.6
90	24.0	60	80	9×14×12	15.0	20	3000	61500	117000	1530	1530.0	1280	6.350	4.0	15.8

Note: Basic dynamic load rating C is a load that allows for a 50-km rating fatigue life and is a vertical and constant load on the ball slide mounting surface.
To convert C to C_{100} for a 100-km fatigue life, divide C by 1.26.

LINEAR GUIDES: RA SERIES

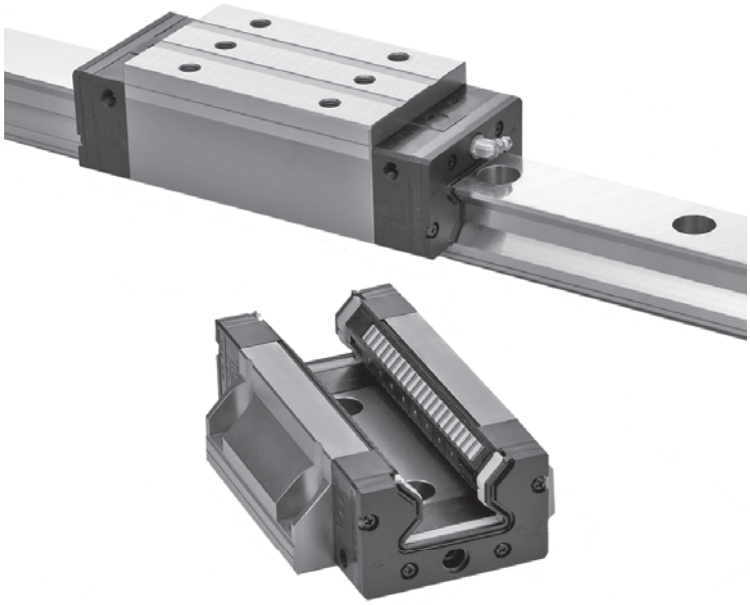

PART NUMBER EXAMPLE FOR ROLLER SLIDE ONLY

Interchangeable Roller Slide

RAA

35

Size

Shape / Height

AN

K6

Accuracy
P6: Precision
K6: Precision with NSK K1™

Preload
Z: Interchangeable with Preload

Z

REFERENCE PART NUMBER FOR RAIL ONLY

Interchangeable Rail

R1A

35

Size

Rail Length (mm)

3000

Material / Surface Treatment
Blank: Standard Carbon Steel

Butting Rail
-01Z: Butting Rail
Z: Non-butting Rail

Z

REFERENCE PART NUMBER FOR ASSEMBLY (ROLLER SLIDE + RAIL)

Series

RA

35

Size

Rail Length (mm)

1000

AN

Shape / Height

Material / Surface Treatment
C: Carbon Steel (NSK standard)

C

2

Number of Roller Slides Per Rail

NSK Control Number
(*** is required when making inquiries)`

***

P6

Accuracy
P6: Without NSK K1™
K6: With NSK K1™

Preload
1: Slight Preload, Z1
3: Medium Preload, Z3
Z: Interchangeable, Medium Preload

3

PLASTIC CAP FOR RAIL MOUNTING HOLE

Linear Guide Model No.	Rail Mounting Bolt Size	Cap. No. for Rail Mounting Hole
RA25	M6	L45800006-003
RA30	M8	-003
RA35	M8	L45800008-003
RA45	M12	L45800012-003
RA55	M14	L45800014-003
RA65	M16	L45800016-003

BRASS CAP FOR RAIL MOUNTING HOLE

Linear Guide Model No.	Rail Mounting Bolt Size	Cap. No. for Rail Mounting Hole
RA25	M6	L45800006-004
RA30	M8	L45800008-004
RA35	M8	L45800008-004
RA45	M12	L45800012-004
RA55	M14	L45800014-004
RA65	M16	L45800016-004

FRONT VIEW OF AN AND BN TYPES

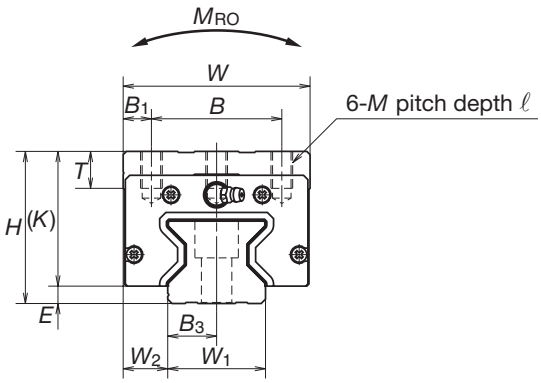

UPPER VIEW OF AN AND BN TYPES

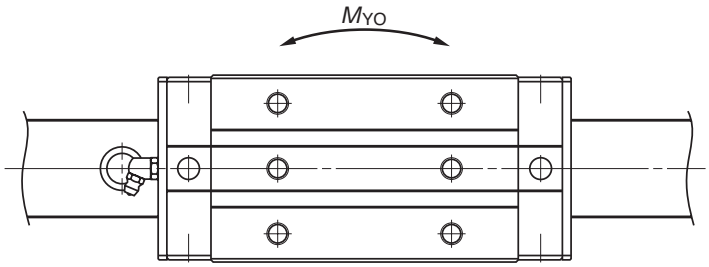

Model No.	Assembly			Roller Slide												
	Height			Width	Length	Mounting Hole								Grease Fitting		
	H	E	W_2	W	L	B	J	M x pitch x ℓ	B_1	L_1	J_1	K	T	Mounting Hole Size	T_1	N
RA15AN RA15BN	28	4	9.5	34	70.0 85.4	26	26	M4×0.7×6	-	44.8 60.2	-	24	8	Ø3	8	3
RA20AN RA20BN	30	5	12	44	86.5 106.3	32	36 50	M5×0.8×6	-	57.5 77.3	-	25	12	Ø3	4	3
RA25AN RA25BN	40	5.0	12.5	48	97.5 115.5	35	35 50	M6×1×9	6.5	65.5 83.5	15.25 16.75	35	12	M6×0.75	10	11
RA30AN RA30BN	45	6.5	16.0	60	110.8 135.4	40	40 60	M8×1.25×11	10.0	74.0 98.6	17.00 19.30	39	14	M6×0.75	10	11
RA35AN RA35BN	55	6.5	18.0	70	123.8 152.0	50	50 72	M8×1.25×12	10.0	83.2 111.4	16.60 19.70	49	15	M6×0.75	15	11
RA45AN RA45BN	70	8.0	20.5	86	154.0 190.0	60	60 80	M10×1.5×17	13.0	105.4 141.4	22.70 30.70	62	17	Rc1/8	14	14
RA55AN RA55BN	80	9.0	23.5	100	184.0 234.0	75	75 95	M12×1.75×18	12.5	128.0 178.0	26.50 41.50	71	18	Rc1/8	21	14
RA65AN RA65BN	90	13.0	31.5	126	228.4 302.5	76	70 120	M16×2×20	25.0	155.4 229.5	42.70 54.75	77	22	Rc1/8	19	14

SIDE VIEW OF AN AND BN TYPES

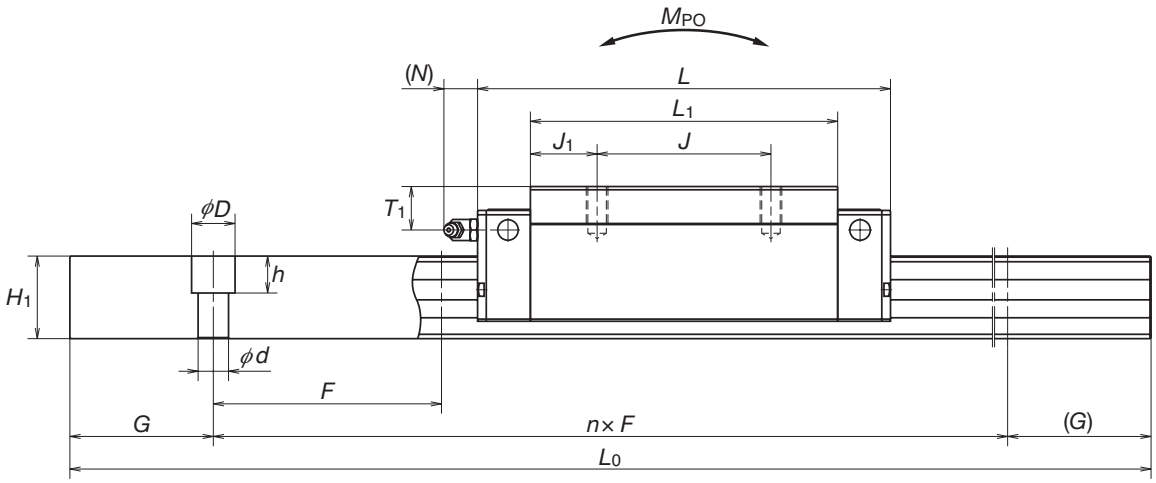

n = (number of holes)-1

Unit: mm

Rail							Basic Load Rating					Weight	
Width	Height	Pitch	Mounting Bolt Hole d x D x h			Max Length (Single Rail) L_{0max}	Dynamic	Static	Static Moment				
W_1	H_1	F		B_3	G		C (N)	C_0 (N)	M_{R0} (N•m)	M_{P0} (N•m)	M_{Y0} (N•m)	Roller Slide (kg)	Rail (kg/m)
15	16.3	60 (30)	4.5×7.5×5.3	-	20	2000	10300 13000	27500 37000	260 350	210 375	210 375	0.21 0.30	1.6
20	20.8	60 (30)	6×9.5×8.5	-	20	3000	19200 24000	52500 70000	665 890	505 900	505 900	0.38 0.50	2.6
23	24.0	30.0	7×11×9	11.5	20.0	3000	29200 35400	72700 92900	970 1240	760 1240	760 1240	0.60 0.91	3.4
28	28.0	40.0	9×14×12	14.0	20.0	3500	38900 47600	93500 121000	1670 2170	1140 1950	1140 1950	1.00 1.30	4.9
34	31.0	40.0	9×14×12	17.0	20.0	3500	53300 67400	129000 175000	2810 3810	1800 3250	1800 3250	1.60 2.10	6.8
45	38.0	52.5	14×20×17	22.5	22.5	3500	92800 116000	229000 305000	6180 8240	4080 7150	4080 7150	3.00 4.10	10.9
53	43.5	60.0	16×23×20	26.5	30.0	3500	129000 168000	330000 462000	10200 14300	7060 13600	7060 13600	4.90 6.70	14.6
63	55.0	75.0	18×26×22	31.5	35.0	3500	210000 288000	504000 756000	19200 28700	12700 28600	12700 28600	9.30 12.20	22.0

Note: Basic load rating complies with ISO standards (ISO14728-1, ISO14728-2).

If above basic dynamic load rating (100-km rating) is converted into 50-km rating, use the following formula: $C_{50\ km} = 1.23 \times C_{100\ km}$.

FRONT VIEW OF AL AND BL TYPES

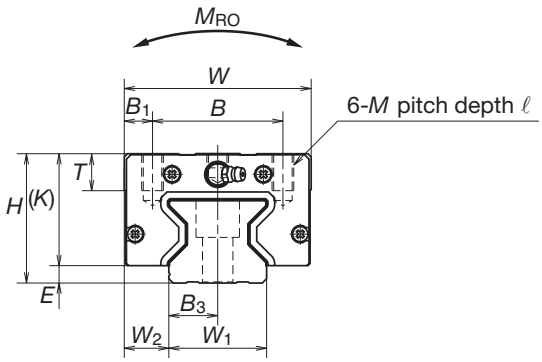

UPPER VIEW OF AL AND BL TYPES

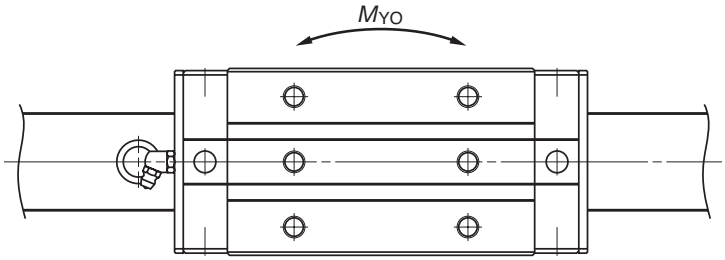

Model No.	Assembly			Roller Slide												
	Height			Width	Length	Mounting Hole								Grease Fitting		
	H	E	W_2	W	L	B	J	M x pitch x ℓ	B_1	L_1	J_1	K	T	Mounting Hole Size	T_1	N
RA15AL RA15BL	24	4	9.5	34	70.0 85.4	26	26	M4×0.7×5.5	-	44.8 60.2	-	20	8	Ø3	4	3
RA25AL RA25BL	36	5.0	12.5	48	97.5 115.5	35	35 50	M6×1×8	6.5	65.5 83.5	15.25 16.75	31	12	M6×0.75	6	11
RA30AL RA30BL	42	6.5	16.0	60	110.8 135.4	40	40 60	M8×1.25×11	10.0	74.0 98.6	17.00 19.30	36	14	M6×0.75	7	11
RA35AL RA35BL	48	6.5	18.0	70	123.8 152.0	50	50 72	M8×1.25×12	10.0	83.2 111.4	16.60 19.70	42	15	M6×0.75	8	11
RA45AL RA45BL	60	8.0	20.5	86	154.0 190.0	60	60 80	M10×1.5×16	13.0	105.4 141.4	22.70 30.70	52	17	Rc1/8	10	14
RA55AL RA55BL	70	9.0	23.5	100	184.0 234.0	75	75 95	M12×1.75×18	12.5	128.0 178.0	26.50 41.50	61	18	Rc1/8	11	14

SIDE VIEW OF AL AND BL TYPES

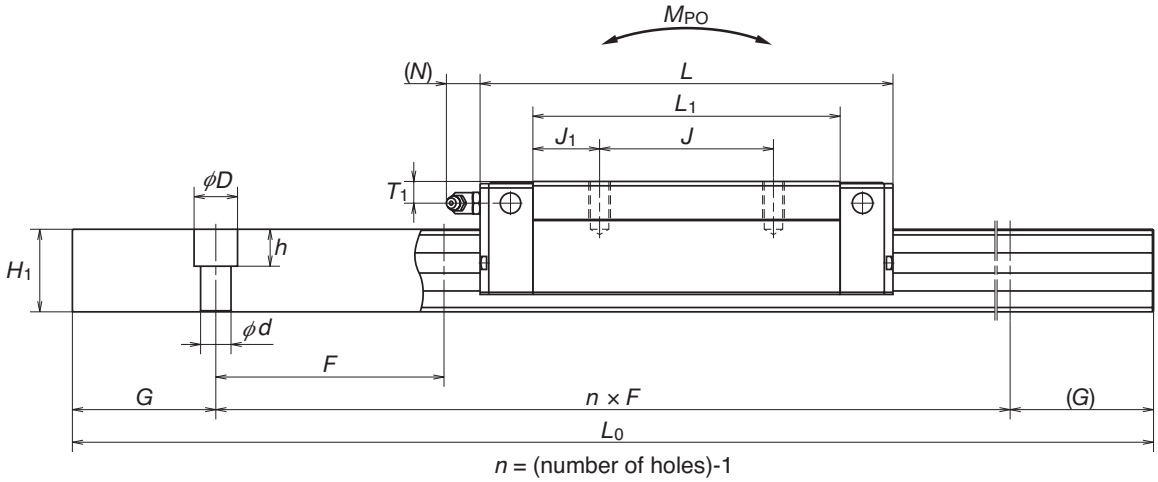

Unit: mm

Rail							Basic Load Rating					Weight	
Width	Height	Pitch	Mounting Bolt Hole			Max Length (Single Rail)	Dynamic	Static	Static Moment				
W_1	H_1	F	d x D x h	B_3	G	L_{0max}	C (N)	C_0 (N)	M_{R0} (N•m)	M_{P0} (N•m)	M_{Y0} (N•m)	Roller slide (kg)	Rail (kg/m)
15	16.3	60 (30)	4.5×7.5×5.3	-	20	2000	10300 13000	27500 37000	260 350	210 375	210 375	0.17 0.25	1.6
23	24	30.0	7×11×9	11.5	20.0	3000	29200 35400	72700 92900	970 1240	760 1240	760 1240	0.45 0.80	3.4
28	28	40.0	9×14×12	14.0	20.0	3500	38900 47600	93500 121000	1670 2170	1140 1950	1140 1950	0.85 1.10	4.9
34	31	40.0	9×14×12	17.0	20.0	3500	53300 67400	129000 175000	2810 3810	1800 3250	1800 3250	1.20 1.70	6.8
45	38	52.5	14×20×17	22.5	22.5	3500	92800 116000	229000 305000	6180 8240	4080 7150	4080 7150	2.50 3.40	10.9
53	43.5	60.0	16×23×20	26.5	30.0	3500	129000 168000	330000 462000	10200 14300	7060 13600	7060 13600	4.10 5.70	14.6

Note: Basic load rating complies with ISO standards (ISO14728-1, ISO14728-2).

If above basic dynamic load rating (100-km rating) is converted into 50-km rating, use the following formula: $C_{50\ km} = 1.23 \times C_{100\ km}$.

FRONT VIEW OF EM AND GM TYPES

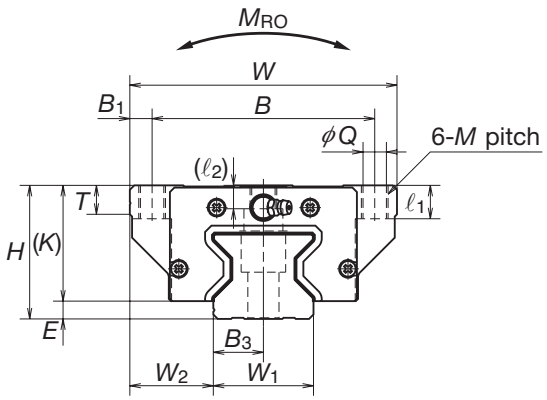

UPPER VIEW OF EM AND GM TYPES

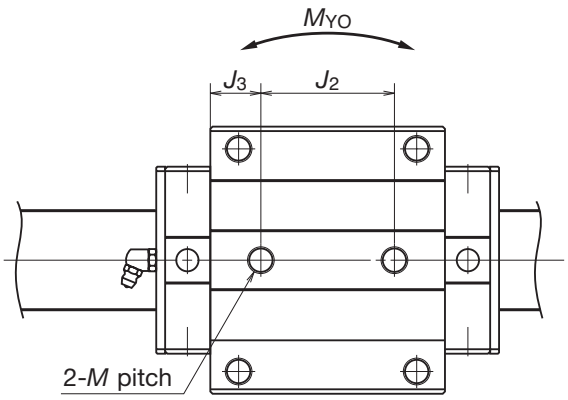

Model No.	Assembly			Roller Slide															
	Height			Width	Length	Mounting Hole											Grease Fitting		
	H	E	W_2	W	L	B	J	J_2	M x pitch x ℓ_1 (ℓ_2)	Q x ℓ_1 (ℓ_2)	B_1	L_1	J_1	J_3	K	T	Mounting Hole Size	T_1	N
RA15EM RA15GM	24	4	16.0	47	-	-	-	-	M5×0.8×8.5 (6.5)	-	-	44.8 60.2	-	-	20	8	Ø3	4	3
RA20EM RA20GM	30	5	21.5	63	-	-	-	-	M6×1×9.5 (8)	-	-	57.5 77.3	-	-	25	10	Ø3	4	3
RA25EM RA25GM	36	5.0	23.5	70	97.5 115.5	57	45	40	M8×1.25×10 (11)	6.8×10 (11)	6.5	65.5 83.5	10.25 19.25	12.75 21.75	31	11	M6×0.75	6	11
RA30EM RA30GM	42	6.5	31.0	90	110.8 135.4	72	52	44	M10×1.5×12 (12.5)	8.6×12 (12.5)	9.0	74.0 98.6	11.00 23.30	15.00 27.30	36	11	M6×0.75	7	11
RA35EM RA35GM	48	6.5	33.0	100	123.8 152.0	82	62	52	M10×1.5×13 (7)	8.6×13 (7)	9.0	83.2 111.4	10.60 24.70	15.60 29.70	42	12	M6×0.75	8	11
RA45EM RA45GM	60	8.0	37.5	120	154.0 190.0	100	80	60	M12×1.75×15 (10.5)	10.5×15 (10.5)	10.0	105.4 141.4	12.70 30.70	22.70 40.70	52	13	Rc1/8	10	14
RA55EM RA55GM	70	9.0	43.5	140	184.0 234.0	116	95	70	M14×2×18 (13)	12.5×18 (13)	12.0	128.0 178.0	16.50 41.50	29.00 54.00	61	15	Rc1/8	11	14
RA65EM RA65GM	90	13.0	53.5	170	228.4 302.5	142	110	82	M16×2×24 (13)	14.6×24 (13)	14.0	155.4 229.5	22.70 59.75	36.70 73.75	77	22	Rc1/8	19	14

SIDE VIEW OF EM AND GM TYPES

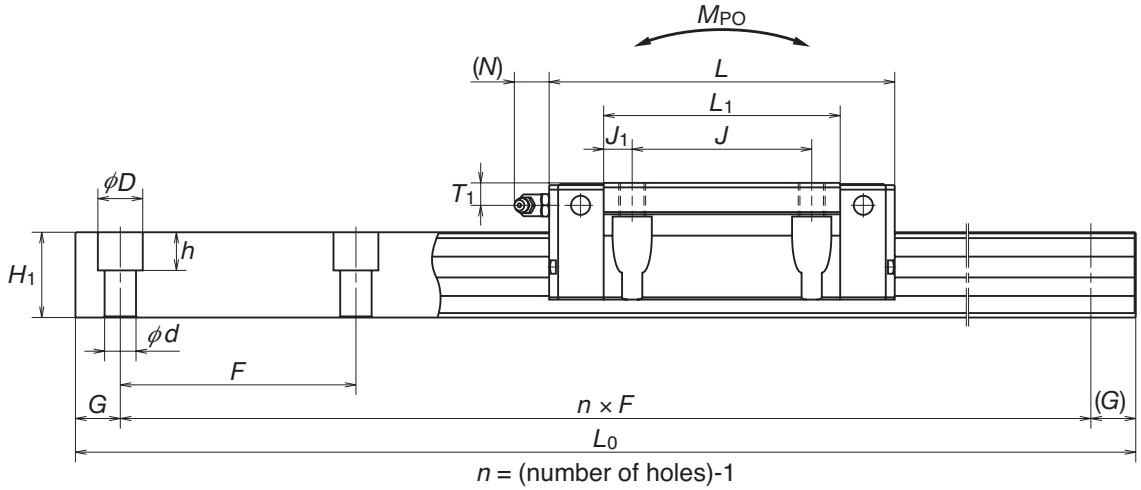

Unit: mm

Rail							Basic Load Rating					Weight	
Width	Height	Pitch	Mounting Bolt Hole			Max Length (Single Rail)	Dynamic	Static	Static Moment				
W_1	H_1	F	d x D x h	B_3	G	L_{0max}	C (N)	C_0 (N)	M_{R0} (N•m)	M_{P0} (N•m)	M_{Y0} (N•m)	Roller slide (kg)	Rail (kg/m)
15	16.3	60 (30)	4.5×7.5×5.3	-	20	2000	10300 13000	27500 37000	260 350	210 375	210 375	0.21 0.28	1.6
20	20.8	60 (30)	6×9.5×8.5	-	20	3000	19200 24000	52500 70000	665 890	505 900	505 900	0.45 0.65	2.6
23	24.0	30.0	7×11×9	11.5	20.0	3000	29200 35400	72700 92900	970 1240	760 1240	760 1240	0.80 1.10	3.4
28	28.0	40.0	9×14×12	14.0	20.0	3500	38900 47600	93500 121000	1670 2170	1140 1950	1140 1950	1.30 1.70	4.9
34	31.0	40.0	9×14×12	17.0	20.0	3500	53300 67400	129000 175000	2810 3810	1800 3250	1800 3250	1.70 2.30	6.8
45	38.0	52.5	14×20×17	22.5	22.5	3500	92800 116000	229000 305000	6180 8240	4080 7150	4080 7150	3.20 4.30	10.9
53	43.5	60.0	16×23×20	26.5	30.0	3500	129000 168000	330000 462000	10200 14300	7060 13600	7060 13600	5.40 7.50	14.6
63	55.0	75.0	18×26×22	31.5	35.0	3500	210000 288000	504000 756000	19200 28700	12700 28600	12700 28600	12.20 16.50	22.0

Note: Basic load rating complies with ISO standards (ISO14728-1, ISO14728-2).

If above basic dynamic load rating (100-km rating) is converted into 50-km rating, use the following formula: $C_{50\ km} = 1.23 \times C_{100\ km}$.

ASSEMBLY AND MOUNTING

ASSEMBLY

Interchangeable ball slides are shipped on (disposable) plastic provisional rails as shown in Fig I.1.

1. Wipe off anticorrosive oil from the rail.
2. All NSK slides come prepacked with Alvania 2 (AS2) grease for quick installation.
3. Align the rail with the bottom and side faces of the provisional rail while pushing the provisional rail lightly against the rail, slide the ball slide on the rail (Fig I.1).

Fig I.1 Assembly of Ball Slide with Rail

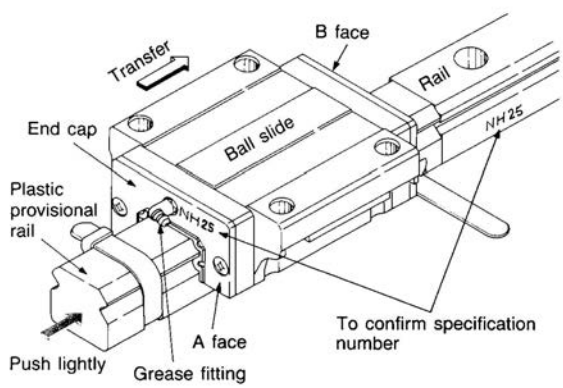

MOUNTING METHOD

Shoulder Height and Corner Shape at Mounting Face

When utilizing the reference surface to secure rail or ball slides to machine components the components must have the mounting face height (H', H") and corner chamfer (r) dimensions as listed in table below and illustrated in Figs. I.2 and I.3, to avoid interference.

Shoulder Height and Corner Shape at Mounting Face

Product No.	Radius of corner r (max)	Shoulder Height of Rail H′	Shoulder Height of Ball Slide H″
15	0.5	4.0	4.5
20	0.5	4.5	5.0
25	0.5	5.0	5.0
30	0.5	6.0	6.0
35	0.5	6.0	6.0
45	0.7	8.0	8.0
55	0.7	10.0	10.0
65	1.0	11.0	11.0

Fig I.2 Rail Datum Face Mounting Part

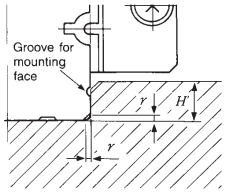

Fig I.3 Ball Slide Datum Face Mounting Part

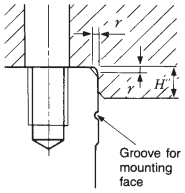

MOUNTING PROCEDURE

For Cases where Datum Surface Exists on the Bed

1. Lightly tighten the rail mounting bolts and then use the shoulder plate to secure rail datum surface against bed mounting surface (See Fig. I.4).
2. Tighten rail mounting bolts to their recommended torque value (see table below). Tighten the bolts in an order which enables the wrench to help push the rail against the mounting surface (see Fig. I.5 for example).

Fig I.4 Positioning of Rail

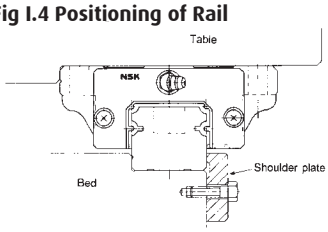

Recommended Torque for Rail Mounting Bolt (Case of Thermally Refined Bolt)

unit: kgf • cm

Bolt Nominal No.	Torque	Bolt Nominal No.	Torque
M3	10.8	M10	440
M4	25.0	M12	770
M5	52.0	M14	1240
M6	88.0	M16	2000
M8	220.0	--	--

[1 kg · cm=0.8681 lb in]

Fig I.5 Tightening Direction

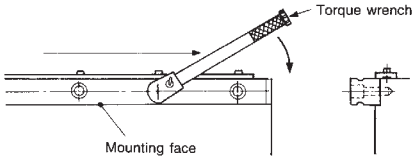

3. Mount the adjust side rail, as shown in Fig. I.6, while checking rail parallelism. For the jig shown in Fig. I.6, stability will be improved by mounting it to a ball slide.

Fig I.6 Parallelism Measurement with Jigs

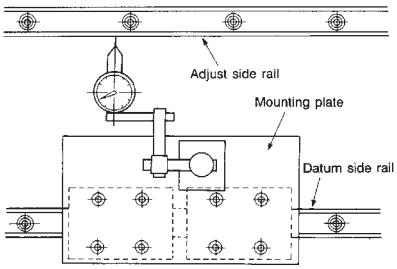

4. If dowel pins are being used they should be installed at this step.
5. Position the ball slides at specified intervals and mount the table gently.
6. Tighten ball slide mounting bolts of datum side while pushing the table so that the table and ball slide mounting reference surfaces are in contact.

INDICATION OF INSTALLED STANDARD SIDE

The datum face of each rail is indicated by a groove in the datum face or by an arrow mark on the end or top surface of the rail.

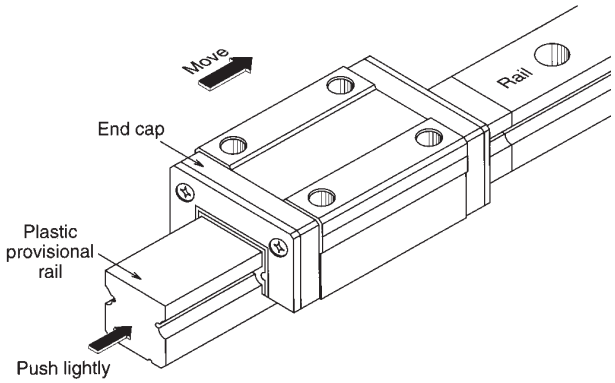

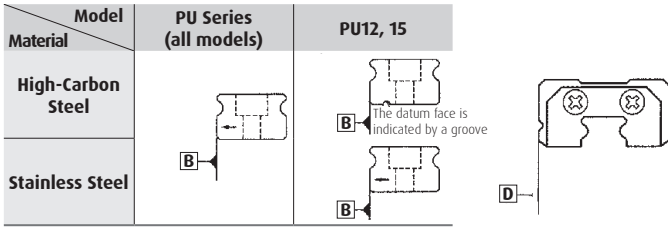

Notes on Usage

Separately packaged ball slide is mounted on a plastic temporary axis (disposable) as shown at left.

1. Wipe rust preventative oil from the rail.
2. Product is ready for immediate use. Comes prepacked with Alvania 2 (AS2) grease.
3. Note the groove mark which identifies the datum faces of ball slide and rail above.
4. Align the rail with the bottom and side faces of the provisional rail while pushing the provisional rail lightly against the rail, slide the ball slide on the rail (Fig I.1).

Lubrication

Grease Lubrication

NSK linear guides are packed with Alvania 2 (AS2) grease and can be used as delivered. The replenishment frequency is recommended to be once a year, but adjust the interval depending on the operational conditions.

To Change Direction of Grease Fitting

1. Remove the grease fitting with a wrench.
2. Wind some sealing tape on the thread of the fitting, then insert it and tighten. Be careful not to over torque when tightening into the side of the plastic bearing end cap.

Change of Fitting Position in Front/Back Direction

1. Remove the plug from the grease fitting mounting hole face B shown in Fig. I.1 with a hexagonal wrench.
2. Remove the grease fitting from face A and screw into hole face B.
3. In place of the removed fitting, insert the plug into the hole in the face A.

Change Grease Fitting Position to Side Surface

To mount the grease fitting on the end cap side face, or on the ball slide face, please consult NSK.

Oil Lubrication

Oil piping can be connected to the tapped hole from where the grease fitting was removed. The recommended lubrication oil supply quantity per ball slide per hour Q is given by the following formula, where N is the rail width number.

$$Q = N \frac{(ml/hr)}{150} \quad \ldots\ldots (5)$$

Using NH45 as an example, N=45, and

$$Q = \frac{45}{150} = 0.3 (ml/hr)$$

Grease Fittings for NSK Ball Slides

Type	Linear Guide Model #	Grease Fitting Part #	Thread Spec.
Drive	NH15, NS15, LW17	L50010000-301	Dia. 3mm
A	NS, NS 20, 25, 30, 25	L50000000-001	M6X0.75MM
B	NS, NS 20, 25, 30, 25	L50100000-001	M6X0.75MM
C	NS, NS 20, 25, 30, 25 LW 21, 27, 35	L50200000-001	M6X0.75MM
A	NH 45, 55, 65	L50003000-001	PT 1/8
B	NH 45, 55, 65	L50103000-001	PT 1/8
C	NH 45, 55, 65, LW 50	L50203000-001	PT 1/8

Shape of Grease Fitting

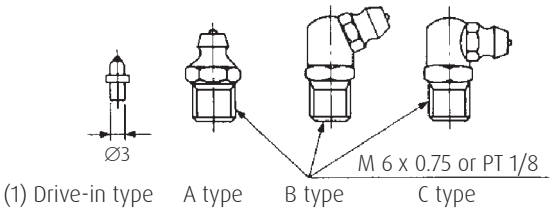

(1) Applies only to model No. NH15, NS15 and LW17.

NSK GREASE UNIT

Replenish grease to NSK linear guides and ball screws by a manual type hand grease pump. Install the grease in bellows tube to the pump. Several types of grease (80 g) are available.

Grease in a bellows tube

COMPOSITION OF NSK GREASE UNIT

Components and grease types are shown below.

	Name	(tube type)	Reference Number
NSK Grease (80 g in a bellows tube)	NSK Grease AS2	(Brown)	NSK GRS AS2
	NSK Grease PS2	(Orange)	NSK GRS PS2
	NSK Grease LR3	(Green)	NSK GRS LR3
	NSK Grease LG2	(Blue)	NSK GRS LG2
NSK Hand Grease Pump Unit Straight nozzle NSK HGP NZ1 -- (One nozzle is provided with the hand pump.)			NSK HGP
Grease nozzle (used with the hand grease pump)			
	NSK straight nozzle		NSK HGP NZ1
	NSK chuck nozzle		NSK HGP NZ2
	NSK drive fitting nozzle		NSK HGP NZ3
	NSK point nozzle		NSK HGP NZ4
	NSK flexible nozzle		NSK HGP NZ5
	NSK flexible extension pipe		NSK HGP NZ6
	NSK straight extension pipe		NSK HGP NZ7

NSK GREASES (80 G IN A BELLOWS TUBE)

Bellows tube

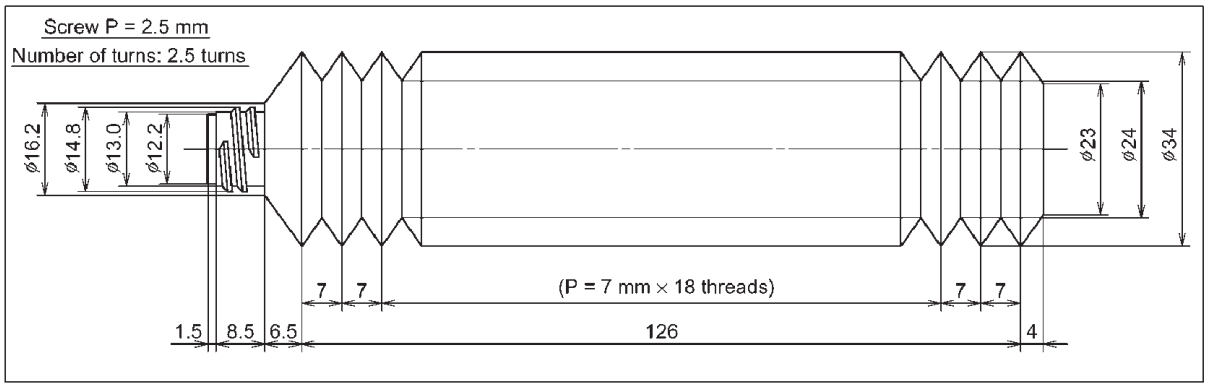

NSK MANUAL GREASE PUMP UNIT

NSK Hand Grease Pump Unit
(Reference number: NSK HGP)

Features

- Light-weight ..... Can be operated by one hand yet there is no worry of making a mistake.
- Inserting by high pressure ..... Insert at 15 Mpa.
- No leaking ..... Does not leak when held upside down.
- Easy to change grease ..... Simply attach the grease in bellows tube.
- Remaining grease .... Can be confirmed through slit on the tube.
- Several nozzles ..... Five types of nozzles to choose from.

Specifications

- Spout volume..... 0.35 g/stroke
- Mass of main body..... 393 g
- Overall length ..... About 200 mm
- Overall width ..... About 200 mm
- Grease tube outer diameter ø38.1
- Accessory..... Several nozzles for a unique application can be attached

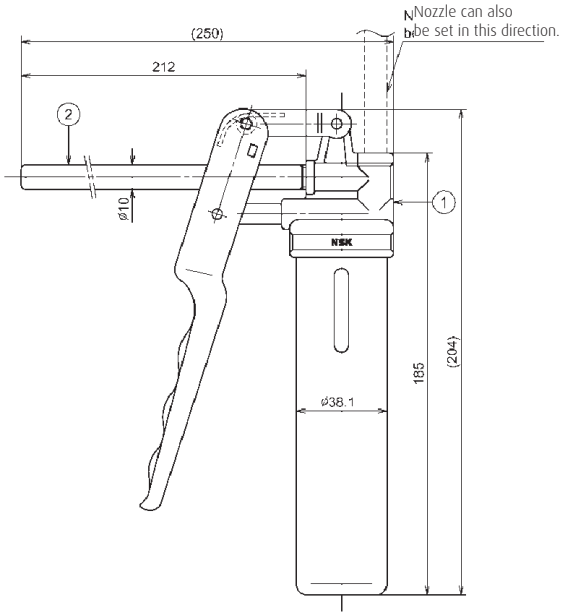

Fig I.7 NSK Hand Grease Pump with NSK straight nozzle

NOZZLES

Nozzles that can be attached to NSK Hand Grease Pump

Name	Designation Code	Use	Dimensions
NSK straight nozzle	NSK HGP NZ1	Can be used with grease fitting A, B, and C under JIS B1575 standard.	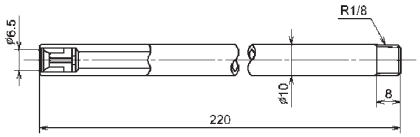
NSK chuck nozzle	NSK HGP NZ2	Can be used with grease fitting A, B, and C under JIS B1575 standard.	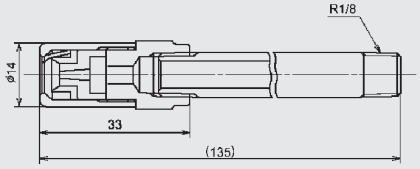
NSK fitting nozzle	NSK HGP NZ3	Dedicated for the drive-in grease fitting.	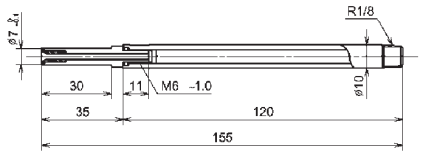
NSK point nozzle	NSK HGP NZ4	Used for linear guides and ball screws which do not have grease fitting. Used to supply grease directly to the ball grooves, or through the opening of ball slide or ball slide to inside.	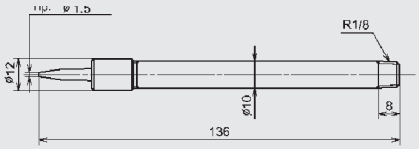
NSK flexible nozzle	NSK HGP NZ5	Tip of nozzle is flexible to supply grease in the areas where hand cannot reach.	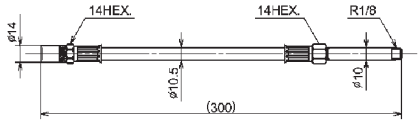
NSK flexible extension pipe	NSK HGP NZ6	Flexible extension pipe connects the grease pump and the nozzle.	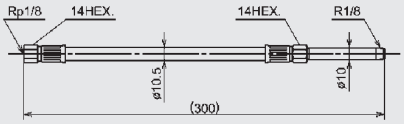
NSK straight extension pipe	NSK HGP NZ7	Straight extension pipe connects the grease pump and the nozzle.	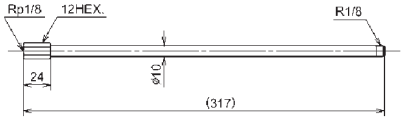

GREASE LUBRICANT FOR LINEAR GUIDES AND BALL SCREWS

Type	Thickener	Base Oil	Base Oil Kinematic Viscosity cSt (40°C)	Range of use Temperature (°C)	Purpose
AS2	Lithium type	Mineral oil	130	-10 ~110	For general use at high load.
PS2	Lithium type	Synthetic oil + mineral oil	15	-50 ~110	For low temperature and high frequency operation.
LR3	Lithium type	Synthetic oil	30	-30 ~130	For ball screws at high speed, medium load.
LG2	Lithium type	Mineral oil + synthetic hydrocarbon oil	30	-20~70	For clean environment.
NF2	Urea composite type	Synthetic oil + mineral oil	27	-40~100	For fretting resistance.

GREASE NOZZLE USED FOR NSK LINEAR GUIDE

Linear Guide Model	Tap Hole for Grease Fitting	Standard Grease Fitting	Straight Nozzle NZ1	Chuck Nozzles (two) NZ	Drive-in Nipple Nozzles NZ3	Point Nozzle NZ4	Flexible Nozzle NZ5
NS15	Ø3	Drive-in type			o		
NS20~35	M6 x 0.75	B type	o	o			o
NH15	Ø3	Drive-in type			o		
NH20~35	M6 x 0.75	B type	o	o			o
NH45~85	PT1 / 8	B type	o	o			o
LW17	Ø3	Drive-in type			o		
LW21~35	M6 x 0.75	B type	o	o			
LW50	PT/18	B type	o	o			o
PU09~15	-	None (1)				o (2)	o
PE09~15	-	None (1)				o (2)	

1) PU and PE Series: Apply grease directly to ball groove, etc. using a point nozzle.
2) NS20, NS25, NH20: Use straight nozzle. (Point nozzle tip cannot be used because it interferes wth the rail top surface).

FIGURES OF GREASE FITTINGS

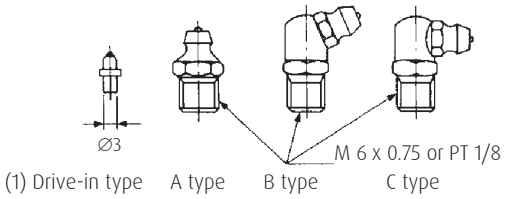

K1™ MAINTENANCE-FREE LUBRICATION SYSTEM

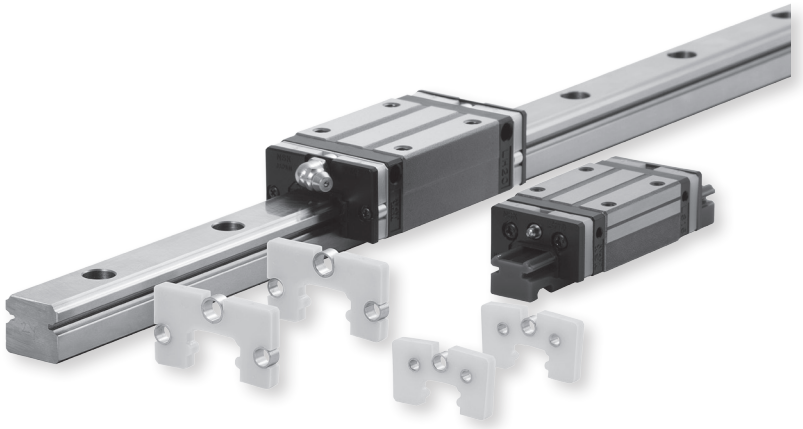

K1™ IDENTIFICATION NUMBER

Refer to the following numbering system when ordering.

Example:

Interchangeable Ball Slide	Series Code	Size Number	Ball Slide Shape Code	Preload Code Z: In case of a light preload	NSK K1™ Equipped
NA	H	30	AN	Z	-K1

The NSK K1™'s distinctive capabilities as a compact and efficient oil-impregnated lubrication unit greatly increases the performance of the Linear Guide. The K1™ Lubrication Unit is available in two types, one for industrial applications and one for food and medical devices where cleanliness and safety are paramount.

FEATURES

Long-term, Maintenance-Free Usage.
In mechanical environments where lubrication is difficult to apply, long-term running efficiency is maintained by using the NSK K1™ in combination with grease.

Prevention of Oil-Related Environmental Pollution.
In locations where oil greatly affects the environment, or in mechanisms with severe hygiene restrictions, sufficient lubrication is provided using the NSK K1™ in combination with grease.

Effective in Environments where the Lubricant is Washed Away.
In facilities where mechanisms are washed down with water, or subject to severe environmental conditions, long service life is ensured by using the NSK K1™ in combination with grease. Especially effective under hygienic conditions where oil must not be dispersed.

Maintains Efficiency in Dusty Environments.
In environments where oil and grease-absorbing dust is produced, long-term efficiency is maintained by using the NSK K1™ in combination with grease.

INTERCHANGEABLE LINEAR GUIDE DIMENSIONS - NH, NS, LW, PU, PE, RA SERIES

NH/NS Series

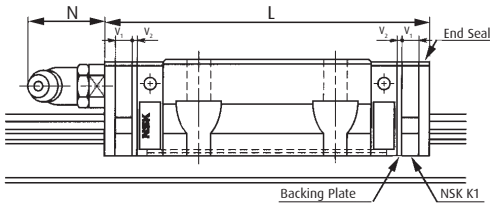

LW Series

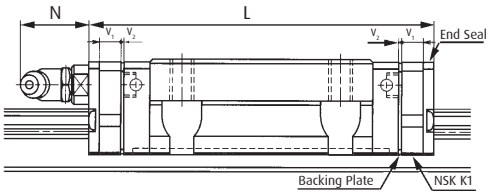

PU/PE Series

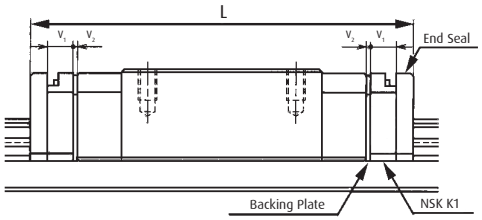

RA Series

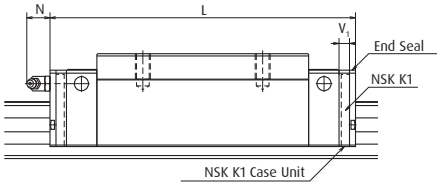

Unit: mm

Interchangeable Ball/Roller Slide Size Code	Ball/Roller Slide Form			Standard Ball/Roller Slide Length	Ball/Roller Slide Length with two NSK K1™ L	Thickness of NSK K1™ V_1	Thickness of Backing Plate V_2	Grease Fitting Projection N
NAH15	AN	EM		55.0	65.6	4.5	0.8	5
	BN	GM		74.0	84.6			
NAH20	AN	EM		69.8	80.4	4.5	0.8	14
	BN	GM		91.8	102.4			
NAH25	AN	AL	EM	79.0	90.6	5.0	0.8	14
	BN	BL	GM	107.0	118.6			
NAH30	AN	AL		85.6	97.6	5.0	1.0	14
		EM		98.6	110.6			
	BN	BL	GM	124.6	136.6			
NAH35	AN	AL	EM	109.0	122.0	5.5	1.0	14
	BN	BL	GM	143.0	156.0			
NAH45	AN	AL	EM	139.0	154.0	6.5	1.0	15
	BN	BL	GM	171.0	186.0			
NAH55	AN	AL	EM	163.0	178.0	6.5	1.0	15
	BN	BL	GM	201.0	216.0			
NAH65	AN	EM		193.0	211.0	8.0	1.0	16
	BN	GM		253.0	271.0			
NAS15	AL	EM		56.8	66.4	4.0	0.8	5
	CL	JM		40.4	50.0			
NAS20	AL	EM		65.2	75.8	4.5	0.8	14
	CL	JM		47.2	57.8			
NAS25	AL	EM		81.6	92.0	4.5	0.8	14
	CL	JM		59.6	70.0			
NAS30	AL	EM		96.4	108.4	5.0	1.0	14
	CL	JM		67.4	79.4			
NAS35	AL	EM		108.0	121.0	5.5	1.0	14
	CL	JM		77.0	90.0			
LAW17	EL			51.4	61.6	4.5	0.6	5
LAW21	EL			58.8	71.4	5.5	0.8	13
LAW27	EL			74.0	86.6	5.5	0.8	13
LAW35	EL			108.0	123.0	6.5	1.0	13
LAW50	EL			140.6	155.6	6.5	1.0	14
PAU09	TR	UR		30.0	36.4	2.7	0.5	-
PAU12	TR	UR		35.2	42.2	3.0	0.5	-
PAU15	AL	BL		43.0	51.2	3.5	0.6	-
PAE09	TR	UR		39.8	46.8	3.0	0.5	-
PAE12	AR	BR		45.0	53.0	3.5	0.5	-
PAE15	AR	BR		56.6	66.2	4.0	0.8	-
RA25	AN	AL	EM	97.5	107.5	5.0	3.3	11
	BN	BL	GM	115.5	125.5			
RA30	AN	AL	EM	110.8	122.8	6.0	3.6	11
	BN	BL	GM	135.4	147.4			
RA35	AN	AL	EM	123.8	136.8	6.5	3.6	11
	BN	BL	GM	152.0	165.0			
RA45	AN	AL	EM	154.0	168.0	7.0	4.2	14
	BN	BL	GM	190.0	204.0			
RA55	AN	AL	EM	184.0	198.0	7.0	4.2	14
	BN	BL	GM	234.0	248.0			
RA65	AN	EM		228.4	243.4	7.5	5.5	14
	BN	GM		302.5	317.5			

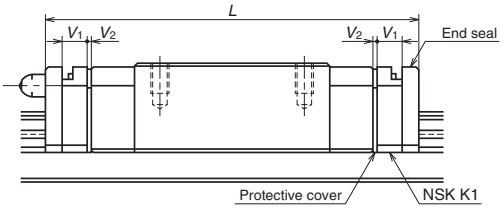

DIMENSION OF PU SERIES LINEAR GUIDES EQUIPPED WITH THE NSK K1™ LUBRICATION UNIT

Unit: mm

Model No.	Ball Slide Length	Ball Slide Model	Standard Ball Slide Length	Ball Slide Length Equipped with Two NSK K1™ L	Thickness of NSK K1™, V_1	Thickness of Protective Cover, V_2	Grease Fitting Projection
PU05	Standard	TR	19.4	24.4	2.0	0.5	--
PU07	Standard	AR	23.4	29.4	2.5	0.5	--
PU09	Standard	TR	30.0	36.4	2.7	0.5	--
	Long	UR	41.0	47.4			
PU12	Standard	TR	35.0	42.0	3.0	0.5	--
	Long	UR	48.7	55.7			
PU15	Standard	AL	43.0	51.2	3.5	0.6	3.6
	Long	BL	61.0	69.2			

Note: Ball slide length equipped with NSK K1™ = (Standard ball slide length) + (Thickness of NSK K1™, V_1 × Number of NSK K1™) (Thickness of the protective cover V_2 × 2)

DIMENSION OF PE SERIES LINEAR GUIDES EQUIPPED WITH THE NSK K1™ LUBRICATION UNIT

Unit: mm

Model No.	Ball Slide Length	Ball Slide Model	Standard Ball Slide Length	Ball Slide Length Equipped with Two NSK K1™ L	Thickness of NSK K1™, V_1	Thickness of Protective Cover, V_2	Grease Fitting Projection
PE05	Standard	AR	24.1	28.9	2.0	0.4	--
PE07	Standard	TR	31.1	37.1	2.5	0.5	--
PE09	Standard	TR	39.8	46.8	3.0	0.5	--
	Long	UR	51.2	58.2			
PE12	Standard	AR	45.0	53.0	3.5	0.5	--
	Long	BR	60.0	68.0			
PE15	Standard	AR	56.6	66.2	4.0	0.8	3.3
	Long	BR	76.0	85.6			

Note: Ball slide length equipped with NSK K1™ = (Standard ball slide length) + (Thickness of NSK K1™, V_1 × Number of NSK K1™) + (Thickness of the protective cover V_2 × 2)

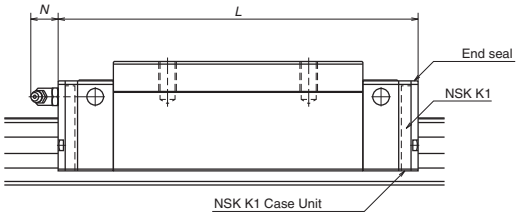

DIMENSION OF RA SERIES LINEAR GUIDES EQUIPPED WITH THE NSK K1™ LUBRICATION UNIT

Unit: mm

Model No.	Roller Slide Length	Roller Slide Model	Roller Slide Length L				Protruding Area of the Grease Fitting N
			Standard	With NSK K1™	Double Seal	Protector	
RA15	Standard	AN, AL, EM	70.0	79.0	76.0	75.4	(3)
	Long	BN, BL, GM	85.4	94.4	91.4	90.8	
RA20	Standard	AN, EM	86.5	95.5	92.5	93.1	(3)
	Long	BN, GM	106.3	115.3	112.3	112.9	
RA25	Standard	AN, AL, EM	97.5	107.5	103.9	104.1	(11)
	Long	BN, BL, GM	115.5	125.5	121.9	122.1	
RA30	Standard	AN, AL, EM	110.8	122.8	117.6	118.0	(11)
	Long	BN, BL, GM	135.4	147.4	142.2	142.6	
RA35	Standard	AN, AL, EM	123.8	136.8	130.6	131.0	(11)
	Long	BN, BL, GM	152.0	165.0	158.8	159.2	
RA45	Standard	AN, AL, EM	154.0	168.0	162.0	162.4	(14)
	Long	BN, BL, GM	190.0	204.0	198.0	198.4	
RA55	Standard	AN, AL, EM	184.0	198.0	192.0	192.4	(14)
	Long	BN, BL, GM	234.0	248.0	242.0	242.4	
RA65	Standard	AN, EM	228.4	243.4	238.4	239.4	(14)
	Long	BN, GM	302.5	317.5	312.5	313.5	

Note: Roller slide length equipped with NSK K1™ = (Standard roller slide length) + (Thickness of NSK K1™ Case Unit × Number of NSK K1™ Case Unit)

K1™ LUBRICATION UNIT HANDLING AND ASSEMBLY INSTRUCTIONS

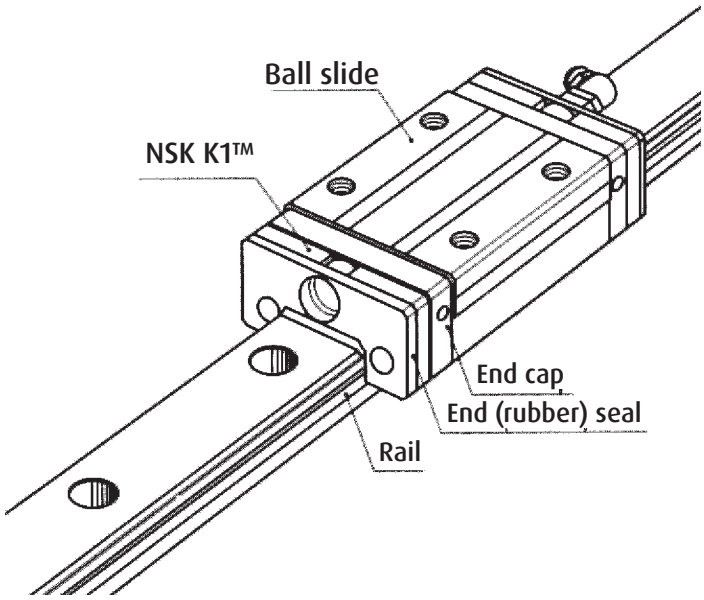

Handling Instructions
To maintain the NSK K1™ unit's high efficiency over a long period of time, please follow these instructions:

1. Permissible temperature range Max. operating temperature: 50°C (122°F) Max. peak temperature: 80°C (176°F). If not installed immediately, they should be kept refrigerated. Avoid storage in direct sunlight.

2. Never leave the linear guide in close proximity to grease-removing organic solvents such as hexane, thinners, etc. Never immerse the linear guide in kerosene or rust preventative oils which contain kerosene.

Note
Other oils such as: water-based cutting oil, oil-based cutting oil, grease (mineral oil-AS2, ester-PS2) present no problems to the K1™ lubricating unit's performance.

ASSEMBLY INSTRUCTIONS FOR THE K1™ LUBRICATING UNIT FOR LINEAR GUIDES

1. Slide linear bearing on to the linear rail, using the plastic provisional rail supplied.
2. Remove the grease fitting from the end of the bearing.
3. Remove the Phillips screws (2 pieces).
4. Remove the end seal from end of bearing.
5. Install threaded plug from K1™ kit (or see option 9 and 10 depending on application).
6. Install the cover plate from the K1™ kit, to the end of bearing, against the end cap.
7. Install K1™ lubricating unit without fixing rings, so it can be expanded over the rail.
8 Put the three (3) fixing rings in position on the K1™ lubricating unit.
9. Replace the end seal, in front of the K1™ lubricating unit.
10. Install connector screw for grease fitting.
11. Replace the grease fitting in connector screw.
12. Install the **extension** Phillips screws (2 pieces, supplied with the K1™ unit kit).

Note: The K1™ lubricating unit has a shelf life. They should be installed immediately upon receipt. It is important to avoid direct sun light and extreme heat conditions.

UNIT CONVERSIONS

TO CONVERT

From	To	Multiply By
daN	N	10.000
kgf	N	9.810
kgf	lbf	2.205
kgf.cm	lbf.in	0.868
kgf.cm	ozf.in	13.890
kgf.m	lbf.ft	7.234
kgf.m	lbf.in	86.811
N.m	lbf.ft	0.738
mm	inch	0.03900
inch	mm	25.400

PRECISION GROUND BALL SCREW

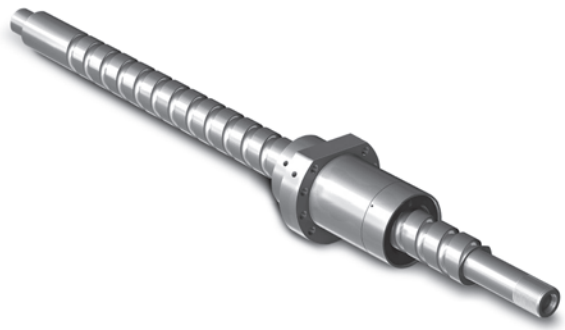

Precision Ground Ball Screws are designed to ensure smooth, precise travel, reduced wear and longer life. NSK is the leading producer of these precision products. Custom designs can be ordered for demanding applications.

Ball Screw Code
W

16
Shaft Diameter (mm)

Approx. Effective Threaded Length (Unit: X100mm)
03

FA-
A-Series: MA, FA, SA
S-Series: MS, FS, SS

Serial No. of Design
7

P
Preload Type
P: Oversized Ball
D: Double Nut
Z: Offset Lead

Recirculation Code
No Code: Tube
Y: Deflector
G: End Cap
G

X
Special Style

Accuracy Grade Code
C0: Highest Accuracy
C1:
C2:
C3:
C5:
C7:
C10: Lowest Accuracy
C5-

Z
Axial Clearance Code
Z: No Axial Clearance (preload)
T: Fine Clearance, <5μm Clearance

Lead (mm)
32

- In addition to standard ground Ball Screws, NSK offers a complete line of custom Precision Ground Ball Screws.
- NSK also offers a wide variety of either Flange or Square style Ball Screw Support Unit kits.

CUSTOM PART:

Ball Screw Code
W

16
Shaft Diameter (mm)

Approx. Effective Threaded Length (Unit: X100mm)
02

WF-
Franklin, Indiana Plant

Serial No. of Design
90

P
Preload Code
P: Oversized Ball
Z: Offset Lead
No Code: Clearance
D: Double Nut

Recirculation Code
No Code: Tube
Y: Deflector
G: End Cap
SS: Internal Recirculating (tangential pick-up)
G

S1
Material Code

Accuracy Grade Code
C0: Highest Accuracy
C1:
C2:
C3:
C5:
C7:
C10: Lowest Accuracy
C3-

Z
Axial Clearance
Z: No Axial Clearance (preload)
T: Fine Clearance, <5μm Clearance
S: <20μm Clearance
N: <50μm Clearance
L: Largest Clearance, based on Ball Size

Lead (mm)
5.08

E
Plant Code

- NSK offers a wide variety of standard "off the shelf" ball screw support unit kits.
- NSK's standard line of both metric and inch series precision ground ball screws are manufactured to either a C3 or C5 accuracy grade.

BALL SCREW SPECIFICATION SHEET FOR NEW APPLICATIONS

Detailed data is required in order for NSK to properly provide a ball screw specification. Please utilize the below sheet for gathering ball screw data. Page can be photocopied and faxed to NSK with details.

Customer Name: _____ Date: _____

Customer POC: _____ PO Number: _____

Customer Phone: _____ Customer E-mail: _____

Application: _____ ex: machine tool, transport, etc.

Speed and Travel:

Stroke: _____ mm

Stroke Time (t): _____ sec

Ramp Time (t1): _____ sec

Acceleration: _____ m/s^2

Deceleration: _____ m/s^2

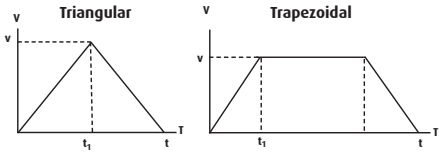

Load Conditions:

Moving Mass: _____ kg

External Axial Force: _____ N

Maximum Load: _____ N

Maximum RPM: _____ rpm

Mass Supported by Linear Guides?

_____ Yes _____ No

Position of Ball Screw Relative to COG

X-coord: _____ (mm) Y-coord: _____ (mm)

(Horizontal Distance) (Vertical Distance)

Orientation:

Mounting Orientation: (Horizontal/Vertical) _____

Support Method

- ○ Fixed-Fixed
- ○ Fixed -Simple
- ○ Fixed-Free

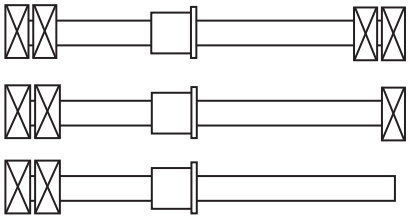

Accuracy/Repeatability Requirements:

_____

_____

_____

_____

Application Details (Please enter any other special considerations not covered)**:**

_____

_____

_____

_____

Environment:

Temperature Range:

_____ deg C

_____ deg F

- ☐ General Industry
- ☐ Wash Down
- ☐ Clean Room
- ☐ Vacuum
- ☐ Outside Use
- ☐ Splash
- ☐ Corrosive
- ☐ High Humidity
- ☐ Contaminated
- ☐ Food/Medical

Additional Comments:

_____

_____

_____

Duty Cycle:

Life Expectation: _____ (Years)

Cycles Per Hour: _____

Operating Hours: _____ (Per Day)

Operating Days: _____ (Per Years)

NSK

NSK Precision America, Inc.

Phone: 1-800-255-4773

Fax: (317) 738-5050

COMPACT FA QUICKSHIP BALL SCREWS

Compact FA Series ball screws incorporate NSK's internal ball recirculation system and offer quiet, high-speed performance. In order to respond quickly to a wide range of needs, NSK offers quick-ship delivery on common sizes. These high-performing ball screws are ready for use in a variety of industries including: semiconductor manufacturing, food, medical equipment, factory automation and general industrial use.

FEATURES

Quick Delivery
Manufacturing in the USA and comprehensive stocking program ensure quick-ship delivery and reduced shipping costs.

Compact Ball Screw
The outside diameter of the ball nut is as much as 30% smaller than those of existing NSK products. Compact size enables equipment and devices, such as linear stages, to be smaller. NSK has also designed low profile support units, specific for the Compact FA series, enabling a unique space-saving design.

EXAMPLE OF STANDARD PART REFERENCE NUMBER

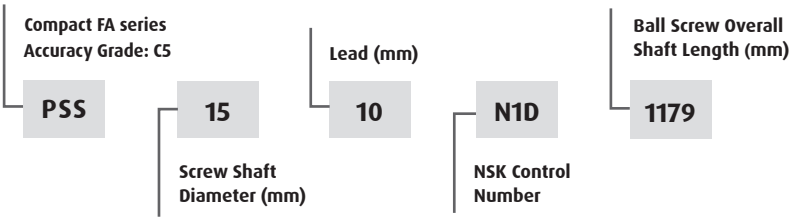

Quiet Operation
The noise level has been reduced by 6 dB, about half of what is sensed by the ear.

High-Speed Operation
Speeds up to 5000 RPM dramatically expands the range of service conditions.

Grease Fitting provided as Standard Equipment
Lubrication ports are provided in two locations to facilitate maintenance. The ball screws can be easily connected to an integrated lubrication system.

Contact Seal
Compact, thin plastic seal is available and helps to maintain a clean work environment, minimizes grease dispersion and reduces contamination entry.

COMBINATIONS OF SHAFT DIAMETER, LEAD AND STROKE

Shaft dia.	Lead	50	100	150	200	300	400	500	600	700	800	1000	1200	1600	2000	Recommended support unit	
																Fixed	Simple
6	8			▲*												WBK04-01M (square) WBK04-11M (round)	-
	12			▲*													
8	10			▲*												WBK06-01M (square) WBK06-11M (round)	-
	15			▲*													
10	5	●	●		●	●	●									WBK08-01B	WBK08S-01B
	10		●		●	●	●										
12	5	●	●		●	●	●	●								WBK08-01B	WBK08S-01B
	10		●		●	●	●	●									
	20		▲		▲	▲	▲	▲									
	30		▲		▲	▲	▲	▲									
15	5	●	●		●	●	●	●	●							WBK12-01B WBK10-01B	WBK12S-01B
	10		●		●	●	●	●	●	●	●	●					
	20		▲		▲	▲	▲	▲	▲	▲	▲	▲					
	30		▲		▲	▲	▲	▲	▲	▲	▲	▲					
20	5			●	●	●	●	●	●	●	●					WBK15-01B	WBK15S-01B
	10				●	●	●	●	●	●	●	●	●				
	20					▲	▲	▲	▲	▲	▲	▲	▲	▲			
	30				▲	▲	▲	▲	▲	▲	▲	▲	▲				
	40						▲	▲	▲	▲	▲	▲	▲	▲	▲		
	60						▲	▲	▲	▲	▲	▲	▲	▲	▲		
25	5			●	●	●	●	●		●	●	●				WBK20-01	WBK20S-01
	10					●	●	●	●	●	●	●		●			
	20							●	●	●	●	●	●	●	▲		
	25							●	●	●	●	●	●	●	▲		
	30							▲	▲	▲	▲	▲	▲	▲	▲		
	50							▲	▲	▲	▲	▲	▲	▲	▲		

*For shaft diameter 6 and 8, length shown is overall length.

● Stocked to 8 week delivery. ▲ Contact NSK for availability.

Linear Motion

REFERENCE NUMBER

Reference number of rolled ball screw is described below. Please use reference number to order, or for a price inquiry

NUT ASSEMBLY (EXAMPLE)

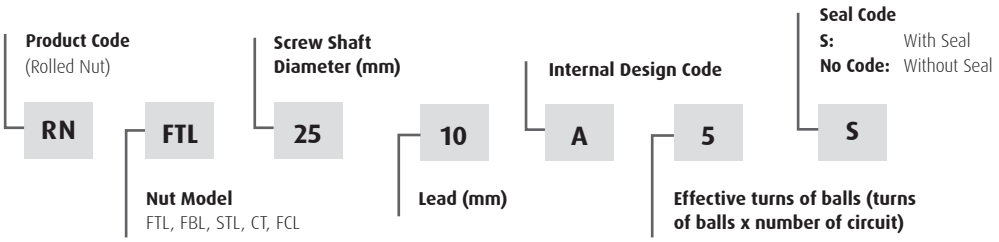

SCREW SHAFT (EXAMPLE)

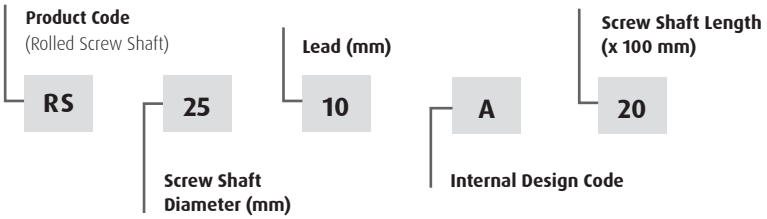

PRODUCT CLASSIFICATION

NSK rolled ball screws are classified by nut model as shown in table below.

CLASSIFICATION OF ROLLED BALL SCREWS

Nut Model	Nut Shape		Recirculation System	Lead Classification
RNFTL		Flanged, Tube projecting type	Return tube type	Fine, medium lead High helix lead
RNFBL		Flanged Circular	Return tube type	Fine, medium lead
RNCT		V-thread (no flange) Projecting tube type	Return tube type	Fine lead
RNSTL		Square type	Return tube type	Small, medium lead
RNFCL		Flanged Circular	End cap type	High helix lead Ultra high helix lead

FEATURES

- Short delivery time: R Series is standardized, and available in stock.
- Interchangeable screw shaft and ball nut: Screw shaft and nut assembly components are sold separately, and randomly matched. The maximum axial play after assembly is shown in the dimension tables.
- Low prices: Screw shaft is processed by rolling. This is why prices are lower than those of precision types.
- Abundant series: There are 128 types of nut assembly combinations in the series. Each combination has two to three different lengths in screw shaft.

ACCURACY

- Lead accuracy: Ct10 grade (u_{300}=0.210). Refer to "Technical Description: Lead Accuracy" for details.
- Axial play: Varies with internal specification. Refer to the dimension tables.
- Run out of screw shaft center: Ct10 grade

NUT INSTALLATION

Refer to "Technical Description: Installation".

SHAFT END MACHINING

It is necessary to machine screw shaft end of the rolled ball screw.

Refer to "Configuration of rolled ball screw shaft end" if you use standard support unit. Refer to "Technical Description: Shaft end machining" for procedures and precautions.

RUST PREVENTION

Rust prevention agent is applied at time of delivery. But special surface treatment is not given to these ball screws. NSK furnishes treatment such as phosphate coating or electrolysis low temperature chrome plating on request.

BALL SCREW SUPPORT UNITS

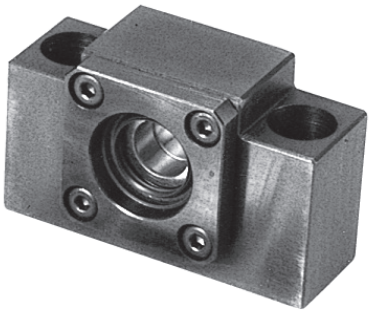

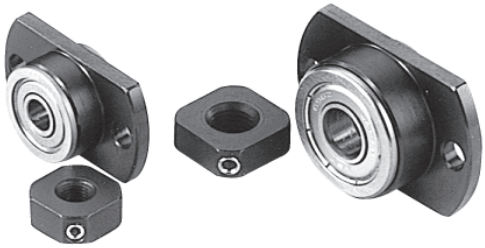

REFERENCE NUMBER AND APPLICABLE BALL SCREW

For Light Load

Support Unit Product Code

WBK — **08** — **S** — **01**

Nominal Size

Support Side Code
No code: Fixed Support Side
S: Simple Support Side
SF: Simple Support Side (for FSS and VFA)
R: Fixed Support Side (support kit)

01: Square Type
11: Round Type

FOR HEAVY LOAD

Support Unit Product Code

WBK — **25** — **DF** — **31**

Nominal Size

Bearing Combination
DF: Duplex (face to face)
DFD: Triplex (face to face)
DFF: Quadruple (face to face)

Design Serial Number

SUPPORT UNITS

Classification

Ball Screw support units are categorized by their shape. Select the type that is appropriate for you to use.

Features

- NSK Bearings Inside:
  - General Use: Fixed support side units use Angular Contact Ball Bearings for rigidity and low friction torque.
  - Heavy Load/Machine Tool: Fixed support side units use Thrust Angular Contact bearings for greater rigidity and load capacity.
- Low Friction Torque: To minimize friction torque a deep groove ball bearing with a shield on both sides is used on the simple support side.
- High Dust Prevention: Oil seal is installed in small clearance on the fixed support side.
- Lock Nut: A fine grade lock nut is provided to fix bearing with high precision.
- Short Delivery Time: Standard items in stock.

SUPPORT UNIT CATEGORIES

Application		Shape	Support Side	Bearing in Use	Bearing Bore Bearing Seat Diameter
Small equipment, light load	Square	WBK**-01* 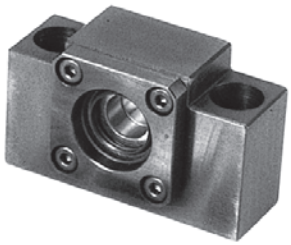	Fixed support side	Angular contact ball bearing	Ø6 - Ø25
		WBK**S-01* 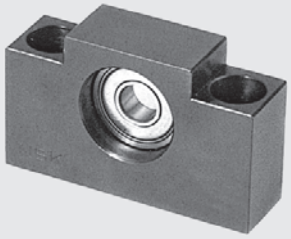	Simple support side	Deep groove ball bearing	Ø6 - Ø25
		WBK**SF-01* 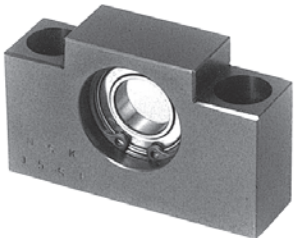	Simple support side	Deep groove ball bearing	Ø12, Ø15 (FSS type or VFA type)
	Round	WBK**R-11 (support kit) 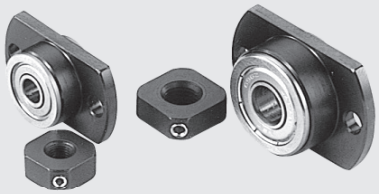	Fixed support side	Deep groove ball bearing (arranged to have angular contact)	Ø4, Ø6 (exclusive for RMA and RMS types)
		WBK**-11*	Fixed support side	Angular contact ball bearing	Ø6 - Ø25
Machine tools, heavy load	Round	WBK**DF*-31 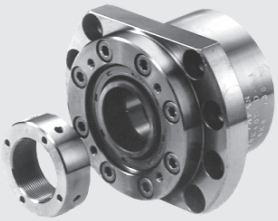	Fixed support side	Thrust angular contact ball bearing	Ø17 - Ø40

Linear Motion

BALL SCREW SUPPORT UNITS (CONT.)

Tables below show "shaft diameter/lead combinations" of standard ball screws that are applicable to support units.

SUPPORT UNITS FOR LIGHT LOAD/SMALL EQUIPMENT AND APPLICABLE SCREW SHAFT DIAMETER/LEAD COMBINATIONS

Support unit/reference number			Screw Shaft Diameter/Lead Combinations of Standard Ball Screws that are Applicable to Support Unit (mm)
Square		Round	
Fixed Support Side (Driving Motor Side)	Simple Support Side (Opposite to Driving Motor)	Fixed Support Side	
WBK06-01A	—	WBK06-11	Ø4x1, Ø6x1
WBK08-01A	WBK08S-01	WBK08-11	Ø8x1, Ø8x1.5, Ø8x2, Ø10x2, Ø10x2.5
WBK10-01A	WBK1™0S-01	WBK1™0-11	Ø10x4, Ø12x2, Ø12x2.5, Ø12x5, Ø12x10
WBK12-01A	WBK1™2S-01	WBK1™2-11	Ø14x5, Ø14x8, Ø15x10, Ø15x20, Ø16x2 Ø16x2.5, Ø16x5, Ø16x16, Ø16x32
WBK15-01A	WBK1™5S-01	WBK1™5-11	Ø20x4, Ø20x5, Ø20x10, Ø20x20, Ø20x40
WBK20-01	WBK20S-01	WBK20-11	Ø25x4, Ø25x5, Ø25x6, Ø25x10, Ø25x20 Ø25x25, Ø25x50, Ø28x5, Ø28x6
WBK25-01	WBK25S-01	WBK25-11	Ø32x5, Ø32x6, Ø32x8, Ø32x10 Ø32x25, Ø32x32

Notes: 1. Reference number is based on the bearing bore on the fixed support side.
2. Please note that the reference numbers 12 or below on the simple-side support do not match the bore of the deep-groove ball bearing in use.

SUPPORT UNITS FOR HEAVY LOAD/MACHINE TOOLS AND APPLICABLE SCREW SHAFT DIAMETER/LEAD COMBINATIONS

Support Unit/Reference Number		Screw Shaft Diameter/Lead Combinations of Standard Ball Screws that are Applicable to the Support Unit (mm)
Fixed Support Side (Drive Motor Side)	Fixed Support Side (Opposite to Drive Motor)	
WBK30DF-31	WBK25DF-31	Ø36x10
WBK30DFD-31	WBK25DFD-31	Ø36x10, Ø40x10
WBK30DF-31	WBK30DF-31	Ø40x5, Ø40x8, Ø40x10, Ø40x12
WBK30DFD-31	WBK30DFD-31	Ø40x12
WBK35DF-31	WBK35DF-31	Ø45x10
WBK40DF-31	WBK40DF-31	Ø50x10
WBK40DFD-31	WBK40DFD-31	Ø50x10

SUPPORT UNITS FOR LIGHT LOAD AND SMALL EQUIPMENT

Fixed Support Side Support Unit						Simple Support Side Support Unit		
Reference No.	Use	Axial Direction			Maximum Starting Torque [N•cm]	Reference No.	Bearing Reference No.	Radial Direction Basic Dynamic Load Rating C [N]
		Basic Dynamic Load Rating Ca [N]	Load Limit [N]	Rigidity [N/μm]				
WBK06-01A	General	2670	1040	28.0	0.49	—	—	—
WBK06-11	General	2670	1040	28.0	0.49	—	—	—
WBK08-01A	General	4400	1450	49.0	0.88	WBK08S-01	606ZZ	2260
WBK08-01B	Low type	6600	2730	94.0	1.90	WBK08S-01B WBK1™2SF-01B*1	606ZZ 6801ZZ	2260 1920
WBK08-01C	Clean environment	3100	1100	36.0	0.52	WBK08S-01C	606VV	2260
WBK08-11	General	4400	1450	49.0	0.88	WBK08S-01	606ZZ	2260
WBK08-11B	Low type	6600	2730	94.0	1.90	—	606ZZ	2260
WBK08-11C	Clean environment	3100	1100	36.0	0.52	WBK08S-01C	606VV	2260
WBK10-01A	General	6600	2730	94.0	1.90	WBK1™0S-01 WBK1™2SF-01*2	608ZZ 6001ZZ	3300 5100
WBK10-01B	Low type	6600	2730	94.0	1.90	—	608ZZ	3300
WBK10-01C	Clean environment	4250	1364	50.0	1.10	WBK1™0S-01C	608VV	3300
WBK10-11	General	6600	2730	94.0	1.90	WBK1™0S-01	608ZZ	3300
WBK10-11C	Clean environment	4250	1364	50.0	1.10	WBK1™0S-01C	608VV	3300
WBK12-01A	General	7100	3040	104.0	2.10	WBK1™2S-01 WBK1™5SF-01*2	6000ZZ 6902ZZ	4550 4350
WBK12-01B	Low type	7100	3040	104.0	2.10	WBK1™2S-01B WBK1™5SF-01B*1	6000ZZ 6902ZZ	4550 4350
WBK12-01C	Clean environment	4700	2443	57.0	1.20	WBK1™2S-01C	6000VV	4550
WBK12-11	General	7100	3040	104.0	2.10	WBK1™2S-01	6000ZZ	4550
WBK12-11C	Clean environment	4700	2443	57.0	1.20	WBK1™2S-01C	6000VV	4550
WBK15-01A	General	7600	3380	113.0	2.40	WBK1™5S-01	6002ZZ	5600
WBK15-01B	Low type	7600	3380	113.0	2.40	WBK1™5S-01B WBK20SF-01B*1	6002ZZ 6804ZZ	5600 4000
WBK15-01C	Clean environment	5100	2757	63.0	1.30	WBK1™5S-01C	6002VV	5600
WBK15-11	General	7600	3380	113.0	2.40	WBK1™5S-01	6002ZZ	5600
WBK15-11C	Clean environment	5100	2757	63.0	1.30	WBK1™5S-01C	6002VV	5600
WBK17-01A	General	13400	5800	120.0	3.50	WBK1™7S-01	6203ZZ	9550
WBK20-01	General	17900	8240	155.0	6.20	WBK20S-01 WBK25SF-01*1	6204ZZ 6005ZZ	12800 10100
WBK20-11	General	17900	8240	155.0	6.20	WBK20S-01	6204ZZ	12800
WBK25-01	General	20200	10000	192.0	7.20	WBK25S-01	6205ZZ	14000
WBK25-11	General	20200	10000	192.0	7.20	WBK25S-01	6205ZZ	14000
WBK04R-11	General	615	490	6.5	0.59	—	—	—
WBK06R-11	General	1280	930	9.0	0.59	—	—	—

*1: Exclusive for FSS type.
*2: Exclusive for VFA type.

MONOCARRIER™

FEATURES

NSK's Monocarrier™ is the culmination of technology and innovation in linear motion. This lightweight, compact single axis linear actuator integrates quality NSK ball screw, linear guide and support bearings into one unit.

4 Long Term Maintenance Free

- Use of NSK K1™ Lubrication Units and grease maintains a smooth lubricating performance for long periods in mechanical environments where lubrication is difficult to apply, where use of oil is not permitted because of hygienic issues, or where the mechanical equipment is subjected to frequent wash downs.
- NSK K1™ lubrication unit is available for food processing machines and medical equipment.
- Grease for clean environments and for general machinery is available.

1 Light Weight, Compact Design

- Available in two different shapes of cross-section, depending on application.
  Light weight type: MCM Series
  Rigid type: MCH Series

3 Superb Antirust Capability

- Low temperature chrome plating is a standard feature for the bodies and sliders to control rusting in normal operating and storing environments. Fluoride low temperature chrome plating is optionally available for much higher rust prevention.

2 All -In-One Structure

- The all-in-one structure integrates a ball screw, a linear guide and support bearings into a single unit to significantly reduce design and installation time.
- Multiple datum planes, the bottom and a lateral side of the rail, facilitate highly accurate installation.
- Immediate operation after installation and run-in is possible.
- A wide selection of fine to high helix leads are available.

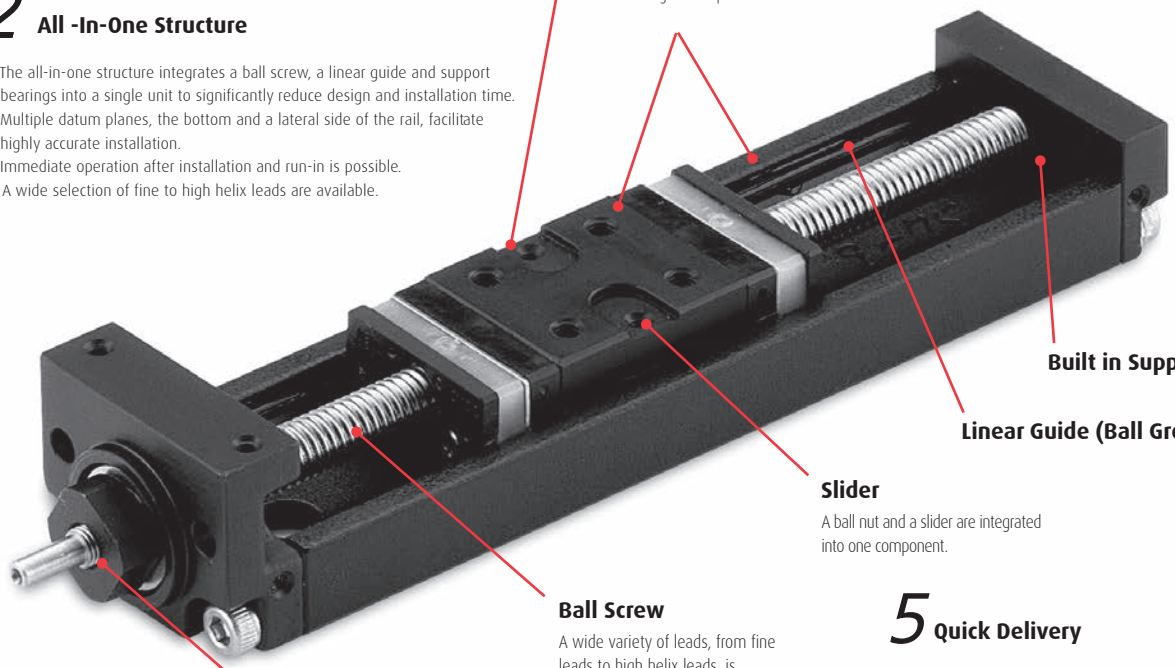

Built in Support Bearings

Linear Guide (Ball Groove)

Slider
A ball nut and a slider are integrated into one component.

Ball Screw
A wide variety of leads, from fine leads to high helix leads, is available.

Built in Support Bearings

5 Quick Delivery

Please see NSK's Linear Actuator catalog for more detailed information on Monocarriers™.

A Monocarrier™ is a single axis unit that combines a ball screw, a linear guide, and a support bearing unit, for ease of design and assembly on a machine. Both MCM and MCH type Monocarriers™, equiped with NSK K1™ lubrication unit, (which enables long term maintenance free operation) are a standard feature.

APPLICATIONS

› **Automotive Manufacturing Equipment** › **Manufacturing Machine for Semiconductors and Liquid Crystal Displays**
› **Food Processing / Medical Equipment** › **Optical / Glass Working Equipment** › **Telecommunication Manufacturing Equipment**

Linear Motion

Please see NSK's Linear Actuator catalog for more detailed information on Monocarriers™.

MCM SERIES MONOCARRIER™

MCM SERIES REFERENCE NUMBER CODING

MC	M	08	040	H	10	K	0	0
Monocarrier™	**M Type:** MCM Series	**Nominal Size Rail width, Unit: 10mm**	**Stroke Unit: 10mm**	**Accuracy Grade** **H:** High Grade **P:** Precision Grade	**Ball Screw lead (mm)**	**Slider Specification** **K:** Single Slider **D:** Double Slider	**Grease Specification** **0:** Standard AS2 **Clean Grease Specification** **B:** LG2	**NSK Management Number**

WITH OPTIONAL ACCESSORIES

MC	E	08	040	H	10	K	0	0	K	0	0	0
	E: With Optional Accessories								**NSK Management Number**	**Sensor Unit**	**Cover Unit**	**Motor Bracket**

Monocarrier™ is suitable for a vertical axis of a material handling robot.

APPLICATIONS

› Equipment that Needs to Reduce the Weight › Substitution for Pneumatic Actuator › Robots › Transporting Equipment › Measuring Machine › Equipment for Factory Automation

Please see NSK's Linear Actuator catalog for more detailed information on Monocarriers™.

ACCURACY GRADE AND LIMITATIONS OF MCM SERIES

The accuracy grade of Monocarrier™ standard inventories is high grade (H), except for lead 1 and 2 of MCM02 and MCM03. When you require strokes longer than 1,200mm, please consult NSK about the accuracy grade.

ACCURACY GRADE

Unit: μm

Grade	High Grade			Precision			
Stroke (mm)	Repeatability	Running Parallelism (vertical)	Backlash	Repeatability	Positioning Accuracy	Running Parallelism (vertical)	Backlash
~200	±10	14	20 or less	±3	20	8	3 or less
~400	±10	16	20 or less	±3	25	10	3 or less
~600	±10	20	20 or less	±3	30	12	3 or less
~700	±10	23	20 or less	±3	30	15	3 or less
~1,000	±10	23	20 or less	±3	35	15	3 or less
~1,200	±10	30	20 or less	±3	40	20	3 or less

LIMITATIONS

Model No.	Lead (mm)	Slider	Stroke (mm)
MCM02	1,2	Single	150
MCM03	1,2	Single	150
	10,12	Single	350
MCM05	5,10,20,30*	Single	900
		Double	810
MCM06	5,10,20	Single	1000
		Double	910
MCM08	5,10,20,30*	Single	1000
		Double	880
MCM10	10,20,30*	Single	1800
		Double	1670

* Applicable only to single slider.

Linear Motion

Please see NSK's Linear Actuator catalog for more detailed information on Monocarriers™.

MCM SERIES STANDARD COMBINATIONS OF STROKE AND BALL SCREW LEAD

SINGLE SLIDER

Unit: mm

Model No.	MCM02		MCM03				MCM05				MCM06			MCM08				MCM10		
Stroke \ Lead	1	2	1	2	10	12	5	10	20	30	5	10	20	5	10	20	30	10	20	30
50	•	•	•	•	•	•	•	•	•		•	•	•	•	•					
100	•	•	•	•	•	•	•	•	•		•	•	•	•	•	•		•	•	
150	•	•	•	•	•	•	•	•	•		•	•	•	•	•	•		•	•	
200					•	•	•	•	•		•	•	•	•	•	•		•	•	
250					•	•	•	•	•		•	•	•	•	•	•		•	•	
300							•	•	•	•	•	•	•	•	•	•		•	•	
400							•	•	•	•	•	•	•	•	•	•	•	•	•	
500							•	•	•	•	•	•	•	•	•	•	•	•	•	•
600							•	•	•	•	•	•	•	•	•	•	•	•	•	•
700											•	•	•	•	•	•	•	•	•	•
800											•	•	•	•	•	•		•	•	•
900																		•	•	
1000																		•	•	

DOUBLE SLIDER

• Mark: Standard Product

Unit: mm

Nominal Size	MCM05		MCM06			MCM08		MCM10	
Stroke \ Lead	10	20	5	10	20	10	20	10	20
60	•								
70								•	
80						•			
110	•		•	•					
160	•								
170								•	•
180						•	•		
210	•	•	•	•	•				
270								•	•
280						•	•		
310	•	•	•	•	•				
370								•	•
380						•	•		
410	•	•	•	•	•				
470								•	•
480						•	•		
510	•	•		•	•				
570								•	•
580						•	•		
610				•	•				
670								•	•
680						•	•		
710				•	•				
870								•	•

Please consult NSK about double slider of MCM02 and MCM03.

Please see NSK's Linear Actuator catalog for more detailed information on Monocarriers™.

MCM SERIES BASIC LOAD RATING

BASIC LOAD RATING

Nominal Size	Lead ℓ (mm)	Shaft Dia d (mm)	Basic Dynamic Load Rating (N)				Basic Static Load Rating (N)		Support Unit Limit Load (N)
			Ball Screw C_a	Linear Guide C	Support Unit C_a	Rated Running Distance L_a (km)	Ball Screw C_{oa}	Linear Guide C_o	
MCM02	1	Ø6	340 (High grade)	4,910	615	1	555 (High grade)	2,120	490
			405 (Precision)				615 (Precision)		
	2		340 (High grade)	3,900		2	555 (High grade)		
			405 (Precision)				615 (Precision)		
MCM03	1	Ø6	735	10,900	2,670	1	1,230	4,900	1,040
	2		735	8,650		2			
	10	Ø8	1,230	6,250		10	1,690	6,620	
	12		1,230	5,880		12			
MCM05	5	Ø12	3,760	15,600	4,400	5	6,310	10,900	1,450
	10		2,260	12,400		10	3,780		
	20		2,260	9,850		20	3,780		
	30		3,260	8,600	6,550	30	5,400		2,730
MCM06	5	Ø16	7,310	25,200	6,550	5	13,500	17,000	2,730
	10	Ø15	7,060	20,000		10	12,700		
	20		4,560	15,900		20	7,750		
MCM08	5	Ø16	7,310	30,800	7,100	5	13,500	22,800	3,040
	10		7,060	24,400		10	12,700		
	20	Ø15	4,560	19,400		20	7,750		
	30		5,070	16,930		30	8,730		
MCM10	10	Ø20	10,900	33,500	7,600	10	21,700	29,400	3,380
	20		7,060	26,600		20	12,700		
	30		11,700	23,200		30	22,700		

Notes: • Basic dynamic and static load ratings indicate values for one slider. • Basic dynamic load rating of linear guide is load of perpendicular direction to the axis that allows 90% of a group of the same Monocarriers™ to operate "Rated running distance" in table, that is equivalent to 1 million revolutions of ball screw and support unit under the same conditions without causing flaking by rolling contact fatigue. • Basic dynamic load rating of ball screw is load in the axial direction that allows 90% of ball screws of a group of the same Monocarriers™ to rotate 1 million revolutions under the same conditions without causing flaking by rolling contact fatigue. • Basic dynamic load rating of support unit is constant load in the axial direction that allows 90% of support units of the same group of Monocarriers™ to rotate 1 million revolutions under the same conditions without causing flaking by rolling contact fatigue. • Basic static load rating is load that results in combined permanent deformations at contact points of balls and ball grooves of respective parts at a diameter of 0.01%.

BASIC STATIC MOMENT LOAD OF LINEAR GUIDE

Model No.	Lead (mm)	Slider	Basic Static Moment (N•m)		
			Rolling M_{RO}	Pitching M_{PO}	Yawing M_{YO}
MCM02	1,2	Single	24	8	8
MCM03	1,2	Single	68	28	28
	10,12		92	51	51
MCM05	5,10,20,30*	Single	229	89	89
		Double	455	765	765
MCM06	5,10,20	Single	415	174	174
		Double	825	1,220	1,220
MCM08	5,10,20,30*	Single	770	300	300
		Double	1,540	2,050	2,050
MCM10	10,20,30*	Single	1,170	425	425
		Double	2,340	2,940	2,940

• Basic static moment of double slider is a value when two sliders equipped with NSK K1™ are butted against each other.
• Basic static moment is the value when a rolling contact pressure of balls exceeds 4,000N/mm2.
• If extremely heavy load is required, please consult NSK for estimation of fatigue life.
*Applicable only to single slider.

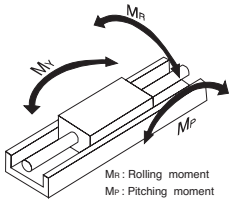

MR : Rolling moment
MP : Pitching moment
MY : Yawing moment

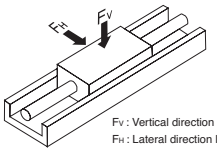

FV : Vertical direction load
FH : Lateral direction load

Please see NSK's Linear Actuator catalog for more detailed information on Monocarriers™.

Linear Motion

MCH SERIES MONOCARRIER™

MCH SERIES REFERENCE NUMBER CODING

* These two code fields shall be added when non-standard grease is used. The coding of a MCH Monocarrier™ with standard grease shall have 12 characters as shown above.

Monocarrier™		Nominal Size Rail width, Unit: 10mm		Accuracy Grade **H:** High Grade **P:** Precision Grade		Slider Specification **K:** Single Slider **D:** Double Slider		Special Specification
MC	H	06	040	H	10	K	B*	0*
	H Type: MCH Series **L Type:** MCH Series Low Profile Rail (only for 06 size)		**Stroke Unit: 10mm**				**Grease Specification** **B:** LG2	

WITH OPTIONAL ACCESSORIES

	S: With MCH Optional Components **R:** With MCL Optional Components									**Sensor Unit**		**Intermediate plate for motor bracket**
MC	S	06	040	H	10	K	0	0	K	0	0	0
									NSK Management Number		**Cover Unit**	

Note: Optional components are available separately.

Monocarrier™ is stiff rail, which can be a beam on its own.

APPLICATIONS

› **Equipment that Needs to Reduce the Weight** › **Substitution for Pneumatic Actuator** › **Robots** › **Transporting Equipment** › **Measuring Machine** › **Equipment for Factory Automation**

Please see NSK's Linear Actuator catalog for more detailed information on Monocarriers™.

ACCURACY GRADE AND LIMITATIONS OF MCH SERIES

The accuracy grade of Monocarrier™ standard inventories is high grade (H), except for lead 1 and 2 of MCM02 and MCM03. When you require strokes longer than 1,200mm, please consult NSK about the accuracy grade.

ACCURACY GRADE

Unit: μm

Grade	High Grade			Precision			
Stroke (mm)	Repeatability	Running Parallelism (vertical)	Backlash	Repeatability	Positioning Accuracy	Running Parallelism (vertical)	Backlash
~200	±10	14	20 or less	±3	20	8	3 or less
~400	±10	16	20 or less	±3	25	10	3 or less
~600	±10	20	20 or less	±3	30	12	3 or less
~700	±10	23	20 or less	±3	30	15	3 or less
~1,000	±10	23	20 or less	±3	35	15	3 or less
~1,200	±10	30	20 or less	±3	40	20	3 or less

LIMITATIONS

Nominal Size	Lead (mm)	Slider	Stroke (mm)
MCH06	5,10,20	Single	600
		Double	500
MCH09	5,10,20	Single	1,000
		Double	850
MCH10	10,20	Single	1,800
		Double	1,650
MCL06	5,10,20	Single	500

Note: Optional components are available separately.

Please see NSK's Linear Actuator catalog for more detailed information on Monocarriers™.

MCH SERIES STANDARD COMBINATIONS OF STROKE AND BALL SCREW LEAD

SINGLE SLIDER

• Mark: Standard Product

Unit: mm

Nominal Size	MCH06			MCH09			MCH10	
Stroke \ Lead	5	10	20	5	10	20	10	20
50	•	•	•					
100	•	•	•	•	•	•	•	•
200	•	•	•	•	•	•	•	•
300	•	•	•	•	•	•	•	•
400	•	•	•	•	•	•	•	•
500	•	•	•	•	•	•	•	•
600				•	•	•	•	•
700				•	•	•	•	•
800				•	•	•	•	•
900							•	•
1000							•	•
1100							•	•
1200							•	•

DOUBLE SLIDER

• Mark: Standard Product

Unit: mm

Nominal Size	MCH06			MCH09			MCH10	
Stroke \ Lead	5	10	20	5	10	20	10	20
100	•	•						
150				•	•			
200	•	•						
250				•	•		•	•
300	•	•						
350				•	•		•	•
400		•	•					
450					•	•	•	•
550							•	•
650					•	•	•	•
750								•
850								•
950								•
1050								•

Please see NSK's Linear Actuator catalog for more detailed information on Monocarriers™.

MCH SERIES BASIC LOAD RATING

BASIC LOAD RATING

Nominal Size	Lead ℓ (mm)	Shaft Dia d (mm)	Basic Dynamic Load Rating (N)				Basic Static Load Rating (N)		Support Unit Limit Load (N)
			Ball Screw C_a	Linear Guide C	Support Unit C_a	Rated Running Distance L_a (km)	Ball Screw C_{oa}	Linear Guide C_o	
MCH06 (MCL06)	5	Ø12	3,000 (High Grade)	22,800	4,400	5	5,410 (High Grade)	16,300	1,450
			3,760 (Precision)				6,310 (Precision)		
	10		1,930 (High Grade)	18,100		10	3,160 (High Grade)		
			2,260 (Precision)				3,780 (Precision)		
	20		1,930 (High Grade)	14,400		20	3,160 (High Grade)		
			2,260 (Precision)				3,780 (Precision)		
MCH09	5	Ø15	6,820 (High Grade)	40,600	7,100	5	13,200 (High Grade)	30,500	3,040
			7,100 (Precision)				13,000 (Precision)		
	10		5,110 (High Grade)	32,200		10	9,290 (High Grade)		
			7,060 (Precision)				12,700 (Precision)		
	20		3,290 (High Grade)	25,500		20	5,620 (High Grade)		
			4,560 (Precision)				7,750 (Precision)		
MCH10	10	Ø20	8,230 (High Grade)	44,600	7,600	10	17,100 (High Grade)	42,000	3,380
			10,900 (Precision)				21,700 (Precision)		
	20		5,300 (High Grade)	35,400		20	10,300 (High Grade)		
			7,060 (Precision)				12,700 (Precision)		

Notes
- Basic dynamic and static load ratings indicate the values for one slider.
- Basic dynamic load rating of the linear guide is the load of perpendicular direction to the axis that allows 90% of a group of the same Monocarriers™ to operate, "Rated running distance" in the table, that is equivalent to 1 million revolutions of the ball screw and the support unit under the same condition without causing flaking by rolling contact fatigue.
- Basic dynamic load rating of the ball screw is a load-to-axial direction that allows 90% of ball screws of a group of the same Monocarriers™ to rotate 1 million revolutions under the same condition without causing flaking by rolling contact fatigue.
- Basic dynamic load rating of the support unit is a constant load-to-axial direction that allows 90% of support units of the same group of Monocarriers™ to rotate 1 million revolutions under the same condition without causing flaking by rolling contact fatigue.
- Basic static load rating is a load that results in combined permanent deformations at the contact points of balls and ball grooves of respective part, which is 0.01% of the diameter.

BASIC STATIC MOMENT LOAD OF LINEAR GUIDE

Nominal size	Slider	Basic Static Moment (N•m) Rolling M_{RO}	Pitching M_{PO}	Yawing M_{YO}
MCH06 (MCL06)	Single	335	133	133
	Double	770	730	730
MCH09	Single	890	385	385
	Double	1,780	2,070	2,070
MCH10	Single	1,460	610	610
	Double	2,920	3,430	3,430

- Basic static moment of double slider is a value when two sliders equipped with NSK K1™™ Lubrication Units are butted against each other.
- The basic static moment is the value when a rolling contact pressure of balls exceeds 4,000N/mm².
- If operating under extreme load conditions, please consult NSK for estimation of fatigue life.

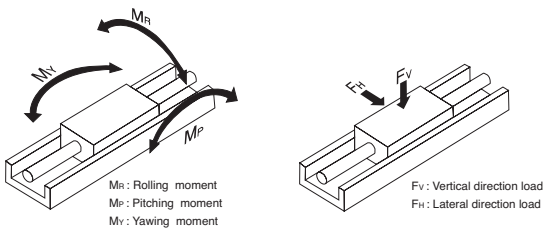

Please see NSK's Linear Actuator catalog for more detailed information on Monocarriers™.

NSK
NSK
JAPAN
NSK
HPS

ENGINEERING

Bearing Selection J-1
Bearing Tolerances J-5
Tolerances for Shaft Diameters J-19
Tolerances for Housing Bore Diameters J-21
Bearing Fits and Internal Clearance J-23
How to Select a Proper Fit J-24
Changes in Radial Internal Clearance J-28
Preloaded Bearings J-29
Lubricants J-32
Bearing Lubrication J-35
How to Handle Bearings J-42
Mounting - Factors to Consider J-42
Inspecting and Troubleshooting J-48
How to Dismount Bearings J-49
Cleaning, Inspection, Evaluation and Maintenance J-51
Bearing Failures J-52
Conversion Factors J-54

BEARING SELECTION

The original equipment manufacturer (OEM) will select a bearing for their equipment based on the loading requirements of, and the space available for, the bearing. The bearing style and size provide the foundation for the bearing selection based on the load carrying capacity in relation to the loads to be carried.

SELECTION BASED ON BASIC LOAD RATING

The most common way to determine bearing life is by using the load ratings of the bearing and the loads required by the application.
The common measurement is "L_{10}" life, defined as the number of revolutions before metal fatigue first appears on 10% of a large group of like bearings. This is referred to as basic rating life or fatigue life. The equations for calculating L_{10} life are:

For ball bearings: $L_{10} = \left(\frac{C}{P}\right)^3$

For roller bearings: $L_{10} = \left(\frac{C}{P}\right)^{10/3}$

Where **L_{10}:** Rating fatigue life (1 million Revs)
P: Bearing Equivalent Load (lbf, N, kgf), see below for calculation of **P**
C: Basic Load Rating (from catalog tables)
For radial bearings, **C=Cr** For thrust bearings, **C=Ca**

If the bearings run at a constant speed, it is convenient to determine L_{10} life in terms of hours. This equation is expressed as:

For ball bearings: $L_{10h} = \frac{1{,}000{,}000}{60n}\left(\frac{C}{P}\right)^3$

For roller bearings: $L_{10h} = \frac{1{,}000{,}000}{60n}\left(\frac{C}{P}\right)^{10/3}$

Where **L_{10h}:** Rating fatigue life in hours **n:** Rotational speed, RPM

Equivalent Bearing Loads (P)

To determine the value of **P**, you must first determine the effects of the radial and axial loads applied. Once this hypothetical load is determined, it is assumed to be constant in magnitude and direction. The general formula for the calculation of **P** is: **P = X Fr + Y Fa**

Where **P:** Bearing equivalent load (lbf, N, kgf)
X: the Radial factor
Fr: the Actual constant radial load
Y: the Axial factor
Fa: the Actual constant axial load

The values for **X** and **Y** can be determined using the tables J.1 - J.3. First, determine the type of bearing being considered. Then, calculate the ratio of the axial load to the radial load and compare this to the bearings "**e**" value in the table. The "**e**" value is determined by multiplying the axial load applied to the bearing by the bearing coefficient factor, f_0, which is obtained from the bearing tables. Divide the result by the static radial load rating. Locate the result in the first column and read across to find the "**e**" value. (In the case of angular contact bearings, the "i" value must be used. If a duplex pair in a DB or DF configuration is used, the "i" value is 2.) In effect, if the axial load is small compared to the radial load, then only the radial load is considered. If not, then a combination of the two is used. After determining the equivalent bearing load, **P,** the L_{10} formula given above can be used to determine the L_{10} life with 90% reliability for a given bearing's basic load rating.
Also, for a required L_{10} life, a basic load rating requirement can be found for bearing selection.

Table J.1 - Equivalent Load Factors for Ball Bearings

Dynamic Equivalent Load $P = X F_r + Y F_a$					
$\frac{f_o F_a}{C_{or}}$	e	$\frac{F_a}{F_r} \le e$		$\frac{F_a}{F_r} > e$	
		X	Y	X	Y
0.172	0.19	1	0	0.56	2.30
0.345	0.22	1	0	0.56	1.99
0.689	0.26	1	0	0.56	1.71
1.03	0.28	1	0	0.56	1.55
1.38	0.30	1	0	0.56	1.45
2.07	0.34	1	0	0.56	1.31
3.45	0.38	1	0	0.56	1.15
5.17	0.42	1	0	0.56	1.04
6.89	0.44	1	0	0.56	1.00

Static Equivalent Load

$\frac{F_a}{F_r} > 0.8$, $P_o = 0.6\ F_r + 0.5\ F_a$

$\frac{F_a}{F_r} \le 0.8$, $P_o = F_r$

Table J.2 - Equivalent Load Factors for Angular Contact Ball Bearings

	Dynamic Equivalent Load $P = X F_r + Y F_a$									
Contact Angle	$\frac{i f_o F_a^*}{C_{or}}$	e	Single, DT				DB or DF			
			$F_a / F_r \le e$		$F_a / F_r > e$		$F_a / F_r \le e$		$F_a / F_r > e$	
			X	Y	X	Y	X	Y	X	Y
15°	0.178	0.38	1	0	0.44	1.47	1	1.65	0.72	2.39
	0.357	0.40	1	0	0.44	1.40	1	1.57	0.72	2.28
	0.714	0.43	1	0	0.44	1.30	1	1.46	0.72	2.11
	1.07	0.46	1	0	0.44	1.23	1	1.38	0.72	2.00
	1.43	0.47	1	0	0.44	1.19	1	1.34	0.72	1.93
	2.14	0.50	1	0	0.44	1.12	1	1.26	0.72	1.82
	3.57	0.55	1	0	0.44	1.02	1	1.14	0.72	1.66
	5.35	0.56	1	0	0.44	1.00	1	1.12	0.72	1.63
25°	--	0.68	1	0	0.41	0.87	1	0.92	0.67	1.41
30°	--	0.80	1	0	0.39	0.76	1	0.78	0.63	1.24
40°	--	1.14	1	0	0.35	0.57	1	0.55	0.57	0.93

*For i, use 2 for DBl, DF and 1 for DT.

Static Equivalent Load $P_o = X_o F_r + Y_o F_a$				
Contact Angle	Single, DT		DB or DF	
	X_0	Y_0	X_0	Y_0
15°	0.5	0.46	1	0.92
25°	0.5	0.38	1	0.76
30°	0.5	0.33	1	0.66
40°	0.5	0.26	1	0.52

Single or DT mounting when $F_r > 0.5 F_r + Y_0 F_a$ use $P_0 = F_r$

Table J.3 - Load Conversion Factors for Other Bearings

Cylindrical Roller **Spherical Roller** **Tapered Roller** **Self-Aligning Ball**	Please Consult NSK Engineering for Values

CORRECTION OF BASIC LOAD RATING DUE TO TEMPERATURE

The operating temperature will significantly affect the fatigue life by altering the hardness of the bearing. Consequently, the basic load rating, which depends on the physical properties of the bearing material, will decrease with higher temperatures. Thus, the basic load rating must be corrected for higher temperatures using the equation: $C_t = f_t * C$

Where
C_t: Basic load rating after temperature correction
f_t: Temperature factor (see following table)
C: Basic load rating from tables, before application of temperature correction.

Table J.4 - Temperature Factor (f_t)

	Bearing Temperature (°C)			
	≤150°	175°	200°	250°
Temperature Factor f_t	1.00	0.95	0.90	0.75

ADJUSTMENTS TO FATIGUE LIFE RATING

Each style of bearing has many characteristics that make that bearing better suited for an application than another bearing. For example, some common applications require a bearing that can handle misalignment, loads in both directions, high speeds, etc..., or a combination of two or more. These operating conditions will alter the bearing life and are accounted for by using correction factors for temperature, reliability, bearing material, and other operating conditions. For the complete list of adjustment factors and their values, please contact NSK engineering or refer to NSK catalog E1103 - (Rolling Bearings)

The formula for adjusting life based on reliability, material, and operating conditions is:

$$L_{na} = a_1 * a_2 * a_3 * L_{10}$$

Where L_{na}: Adjusted life rating.

L_{10}: Life rating, adjusted for fatigue life of 90% reliability. This may not satisfy all applications. For higher reliability requirements, L_{10} must be adjusted.

a_1: Life correction factor for reliability. This is determined from the reliability required of the bearing for its application (see table below).

a_2: Life correction factor for bearing material.

a_3: Life correction factor for operating conditions.

Values of a_2 and a_3 are difficult to determine, however, for most applications, $a_2 * a_3 = 1$ can be assumed. If you have concerns about lubrication viscosity, temperature, contamination, misalignment, or other operating abnormalities, please consult NSK Engineering.

Table J.5 - Reliability Factor (a_1)

	Reliability					
	90%	**95%**	**96%**	**97%**	**98%**	**99%**
a_1	1.00	0.62	0.53	0.44	0.33	0.21

STATIC LOAD RATING

Some applications are stationary with loads for long periods, rotate at very low speeds, are subjected to slow oscillations, or are exposed to shock loads. In these events, the static load rating (C_{or} or C_{oa}) must be used in the life calculations. Please contact NSK Engineering for more details.

SELECTION BASED ON DIMENSIONS

For single row bearings having the same width series, diameter series, and bore size, all styles have the same bore, O.D., and width. For example, 6203, NJ203, and 7203 all have a 17mm bore, a 42mm O.D., and 12mm width. Therefore, selection can be made based on the requirements of the application such as, speeds, misalignment capabilities, bearing value, etc..., provided that the life requirement is met by the bearing style.

BEARING TOLERANCES

BEARING TOLERANCE STANDARDS

The dimensional and running accuracies of rolling bearings are standardized by ISO with regard to the following items:

- Tolerances for bore diameter, outer diameter, individual ring width, and overall width.
- Tolerances for absolution dimensions of inscribed circle diameter and circumscribed circle diameter.
- Tolerances for chamfer dimension.
- Tolerances for width variations.
- Tolerances for taper angle and taper bore diameters.
- Tolerances for radial runout of inner ring and outer rings.
- Tolerances for axial runout of inner and outer rings.
- Tolerances for side or face runout of inner ring.
- Tolerances for side or face runout of outer ring.

In grading bearing tolerances, ISO "normal class" represents the standard. ISO classes 6, 5, 4, and 2 represent four higher grades. In general, DIN, JIS, and ABMA tolerance classes conform to these ISO standards. Tolerance classes applicable to each bearing type are shown in the subsequent tables.

Table J.6 - Bearing Types and Tolerance Classes

Bearing Types		Applicable Tolerance Classes					Applicable Tables	Applicable Pages
Angular Contact Ball Bearings		Class N	Class 6	Class 5	Class 4	Class 2	J.8 - J.12	J-7 - J-10
Self-Aligning Ball Bearings		Class N	Class 6 equivalent	Class 5 equivalent	--	--	J.8 - J.12	J-7 - J-10
Cylindrical Roller Bearings		Class N	Class 6	Class 5	Class 4	Class 2	J.8 - J.12	J-7 - J-10
Spherical Roller Bearings		Class N	Class 6 equivalent	Class 5 equivalent	--	--	J.8 - J.12	J-7 - J-10
Tapered Roller Bearings	Metric Design	Class N, Class 6X	--	Class 5	Class 4	--	J.15 - J.19	J-11 - J-14
Tapered Roller Bearings	Inch Design	ABMA, Class 4	ABMA, Class 2	AMBA, Class 3	ABMA, Class 0	ABMA, Class 00	J.20 - J.21	J-15 - J-16
Thrust Ball Bearings		Class N	Class 6	Class 5	Class 4	--	J.23 - J.25	J-17 - J-18
Spherical Roller Thrust Bearings		Class N	--	--	--	--	J.26 - J.27	J-18
Equivalent Standards (ref.)								
JIS[1]		Class 0	Class 6	Class 5	Class 4	Class 2	--	--
DIN[2]		0	P6	P5	Class P4	P2	--	--
ABMA[3]	Ball Bearings	ABEC1	ABEC3	ABEC5 (Class 5P)	ABEC7	ABEC9 (Class 9P)	J.8 - J.12	J-7 - J-10
ABMA[3]	Roller Bearings	RBEC1	RBEC3	RBEC5			--	--
ABMA[3]	Tapered Roller Bearings	Class 4	Class 2	Class 3	Class 0	Class 00	J.15 - J.21	J-11 - J-16

[1] JIS: Japanese Industrial Standards [2] DIN: Deutch Industrie Norm [3] ABMA: American Bearing Manufacturers Association

BEARING TOLERANCE NOMENCLATURE

Definitions for running accuracy and their measuring methods are shown below. They are described in detail in ISO 5593 (Rolling Bearings-Vocabulary), JIS B 1515 (Measuring Methods for Rolling Bearings), and elsewhere.

Table J.7 - Symbols for Boundary Dimensions and Running Accuracy

d	Bearing bore diameter, nominal	$\triangle_{Ts}$	Deviation of the actual bearing width
$\triangle_{ds}$	Deviation of single bore diameter	D	Bearing outside diameter, nominal
$\triangle_{dmp}$	Single plane mean bore diameter deviation	$\triangle_{Ds}$	Deviation of a single outside diameter
V_{dp}	Bore diameter variation in a single radial plane	$\triangle_{Dmp}$	Single plane mean outside diameter deviation
V_{dmp}	Mean bore diameter variation	V_{Dp}	Outside diameter variation in a single radial plane
B	Inner ring width, nominal	V_{Dmp}	Mean outside diameter variation
$\triangle_{Bs}$	Deviation of a single inner ring width	C	Outer ring width, nominal
V_{Bs}	Inner ring width variation	$\triangle_{Cs}$	Deviation of a single outer ring width
K_{ia}	Radial runout of assembled bearing inner ring	V_{Cs}	Outer ring width variation
S_d	Inner ring reference face (backface, where applicable) runout with bore	K_{ea}	Radial runout of assembled bearing outer ring
S_{ia}	Assembled bearing inner ring (backface) runout with raceway	S_D	Variation of bearing outside surface generatrix inclination with outer ring reference face (backface)
S_i, S_e	Raceway to backface thickness variation of thrust bearing	S_{ea}	Assembled bearing outer ring (backface) runout with raceway
T	Bearing width, nominal		

Measuring Methods for Running Accuracy (summarized)

Illustrations

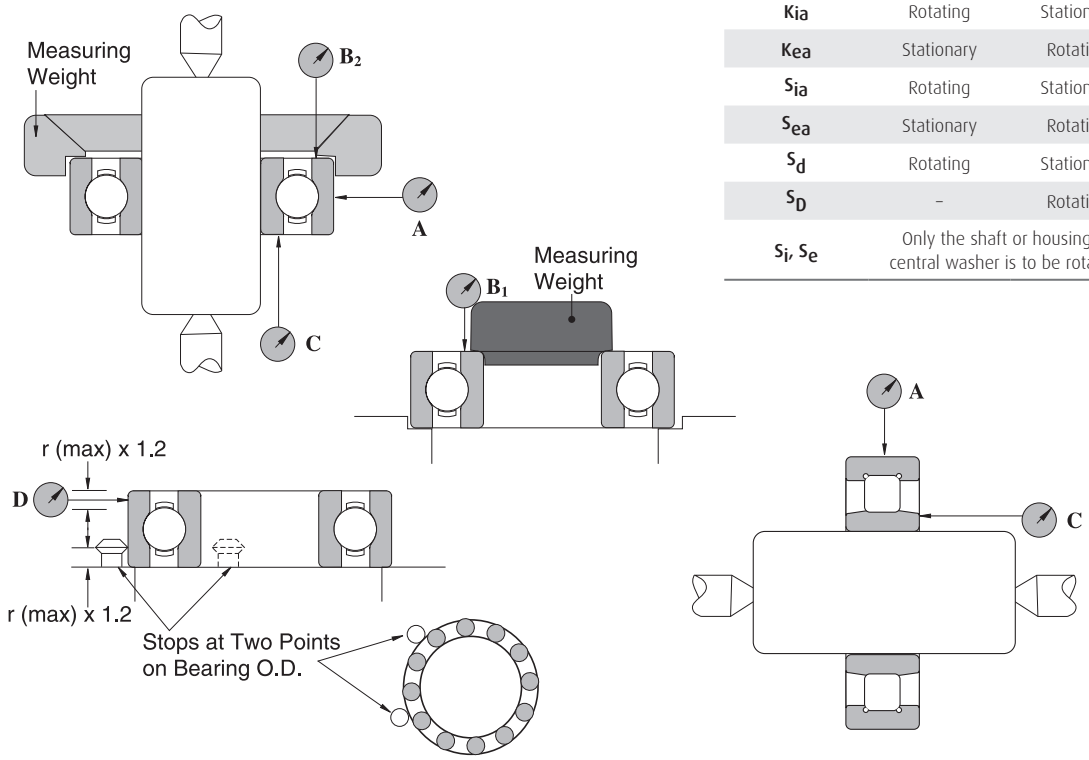

Running Accuracy	Inner Ring	Outer Ring	Dial Gage
K_{ia}	Rotating	Stationary	A
K_{ea}	Stationary	Rotating	A
S_{ia}	Rotating	Stationary	B1
S_{ea}	Stationary	Rotating	B2
S_d	Rotating	Stationary	C
S_D	–	Rotating	D
S_i, S_e	Only the shaft or housing or central washer is to be rotated.		E

Table J.8 - Tolerances for Inner Ring Bore of Radial Bearings (excluding Tapered Roller Bearings)

Units: inch

Nominal Bore Diameter d (mm)		△dmp(1)										ds(1)			
		Class N		Class 6		Class 5		Class 4		Class 2		Class 4 Diameter Series 0, 1, 2, 3, 4		Class 2	
over	incl	high	low	high	low	high	low	high	low	high	low	high	low	high	low
0.6(2)	2.5	0	-.0003	0	-.0003	0	-.0002	0	-.0002	0	-.0001	0	-.0002	0	-.0001
2.5	10.0	0	-.0003	0	-.0003	0	-.0002	0	-.0002	0	-.0001	0	-.0002	0	-.0001
10	18.0	0	-.0003	0	-.0003	0	-.0002	0	-.0002	0	-.0001	0	-.0002	0	-.0001
18	30.0	0	-.0004	0	-.0003	0	-.0002	0	-.0002	0	-.0001	0	-.0002	0	-.0001
30	50.0	0	-.0005	0	-.0004	0	-.0003	0	-.0002	0	-.0001	0	-.0002	0	-.0001
50	80.0	0	-.0006	0	-.0005	0	-.0004	0	-.0003	0	-.0002	0	-.0003	0	-.0002
80	120.0	0	-.0008	0	-.0006	0	-.0004	0	-.0003	0	-.0002	0	-.0003	0	-.0002
120	150.0	0	-.0010	0	-.0007	0	-.0005	0	-.0004	0	-.0003	0	-.0004	0	-.0003
150	180.0	0	-.0010	0	-.0007	0	-.0005	0	-.0004	0	-.0003	0	-.0004	0	-.0003
180	250.0	0	-.0012	0	-.0009	0	-.0006	0	-.0005	0	-.0003	0	-.0005	0	-.0003
250	315.0	0	-.0014	0	-.0010	0	-.0007	–	–	–	–	–	–	–	–
315	400.0	0	-.0016	0	-.0012	0	-.0009	–	–	–	–	–	–	–	–
400	500.0	0	-.0018	0	-.0014	–	–	–	–	–	–	–	–	–	–
500	630.0	0	-.0020	0	-.0016	–	–	–	–	–	–	–	–	–	–
630	800.0	0	-.0030	–	–	–	–	–	–	–	–	–	–	–	–
800	1000.0	0	-.0039	–	–	–	–	–	–	–	–	–	–	–	–
1000	1250.0	0	-.0049	–	–	–	–	–	–	–	–	–	–	–	–
1250	1600.0	0	-.0063	–	–	–	–	–	–	–	–	–	–	–	–
1600	2000.0	0	-0.0079	–	–	–	–	–	–	–	–	–	–	–	–

Note: (1) Applicable to bearings with cylindrical bores. (2) 0.6mm is included in this group.

Table J.9 - Tolerances for Outer Ring O.D. of Radial Bearings (excluding Tapered Roller Bearings)

Units: inch

Nominal Outside Diameter D (mm)		△Dmp										△Ds			
		Class N		Class 6		Class 5		Class 4		Class 2		Class 4 Diameter Series 0, 1, 2, 3, 4		Class 2	
over	incl	high	low	high	low	high	low	high	low	high	low	high	low	high	low
2.5(1)	6	0	-.0003	0	-.0003	0	-.0002	0	-.0002	0	-.0001	0	-.0002	0	-.0001
6	18	0	-.0003	0	-.0003	0	-.0002	0	-.0002	0	-.0001	0	-.0002	0	-.0001
18	30	0	-.0004	0	-.0003	0	-.0002	0	-.0002	0	-.0002	0	-.0002	0	-.0002
30	50	0	-.0004	0	-.0004	0	-.0003	0	-.0002	0	-.0002	0	-.0002	0	-.0002
50	80	0	-.0005	0	-.0004	0	-.0004	0	-.0003	0	-.0002	0	-.0003	0	-.0002
80	120	0	-.0006	0	-.0005	0	-.0004	0	-.0003	0	-.0002	0	-.0003	0	-.0002
120	150	0	-.0007	0	-.0006	0	-.0004	0	-.0004	0	-.0002	0	-.0004	0	-.0002
150	180	0	-.0010	0	-.0007	0	-.0005	0	-.0004	0	-.0003	0	-.0004	0	-.0003
180	250	0	-.0012	0	-.0008	0	-.0006	0	-.0004	0	-.0003	0	-.0004	0	-.0003
250	315	0	-.0014	0	-.0010	0	-.0007	0	-.0005	0	-.0003	0	-.0005	0	-.0003
315	400	0	-.0016	0	-.0011	0	-.0008	0	-.0006	0	-.0004	0	-.0006	0	-.0004
400	500	0	-.0018	0	-.0013	0	-.0009	–	–	–	–	–	–	–	–
500	630	0	-.0020	0	-.0015	0	-.0011	–	–	–	–	–	–	–	–
630	800	0	-.0030	0	-.0018	0	-.0014	–	–	–	–	–	–	–	–
800	1000	0	-.0039	0	-.0024	–	–	–	–	–	–	–	–	–	–
1000	1250	0	-.0049	–	–	–	–	–	–	–	–	–	–	–	–
1250	1600	0	-.0063	–	–	–	–	–	–	–	–	–	–	–	–
1600	2000	0	-.0079	–	–	–	–	–	–	–	–	–	–	–	–
2000	2500	0	-.0098	–	–	–	–	–	–	–	–	–	–	–	–

Note: (1) 2.5mm is included within this group.

Remarks: (1) The outside diameter low tolerances specified in this table do not apply within a distance of 1.2 times the chamfer dimension r(max) from the ring face.
(2) The cylindrical bore diameter "no-go" side tolereance limit (high) specified in this table does not necessarily apply within a distance of 1.2 times the chamfer dimension r (max) from the ring face.
(3) ABMA Std 20-1987 was amended: ABEC1 ⁰ RBEC1, ABEC3 ⁰ RBEC3, ABEC5 ⁰ RBEC5, ABEC7, AND ABEC9 are equivalent to Classes N, 6, 5, 4, and 2 respectively.

Table J.8 - Tolerances for Inner Ring Bore of Radial Bearings (excluding Tapered Roller Bearings) (continued)

Units: inch

V_{dp}[1]											V_{dmp}[1]				
Class N			Class 6			Class 5		Class 4		Class	Class				
Diameter Series			Diameter Series			Dia. Series		Dia. Series							
7, 8, 9	0, 1	2, 3, 4	7, 8, 9	0, 1	2, 3, 4	7, 8, 9	0, 1, 2, 3, 4	7, 8, 9	0, 1, 2, 3, 4	2	N	6	5	4	2
max	max	max	max	max	max	max	max	max	max	max	max	max	max	max	max
+.0004	+.0003	+.0002	+.0004	+.0003	+.0002	+.0002	+.0002	+.0002	+.0001	+.0001	+.0002	+.0002	+.0001	+.0001	+.0001
+.0004	+.0003	+.0002	+.0004	+.0003	+.0002	+.0002	+.0002	+.0002	+.0001	+.0001	+.0002	+.0002	+.0001	+.0001	+.0001
+.0004	+.0003	+.0002	+.0004	+.0003	+.0002	+.0002	+.0002	+.0002	+.0001	+.0001	+.0002	+.0002	+.0001	+.0001	+.0001
+.0005	+.0004	+.0003	+.0004	+.0003	+.0002	+.0002	+.0002	+.0002	+.0002	+.0001	+.0003	+.0002	+.0001	+.0001	+.0001
+.0006	+.0005	+.0004	+.0005	+.0004	+.0003	+.0003	+.0002	+.0002	+.0002	+.0001	+.0004	+.0003	+.0002	+.0001	+.0001
+.0007	+.0007	+.0004	+.0006	+.0006	+.0004	+.0004	+.0003	+.0003	+.0002	+.0002	+.0004	+.0004	+.0002	+.0001	+.0001
+.0010	+.0010	+.0006	+.0007	+.0007	+.0004	+.0004	+.0003	+.0003	+.0002	+.0002	+.0006	+.0004	+.0002	+.0002	+.0001
+.0012	+.0012	+.0007	+.0009	+.0009	+.0006	+.0005	+.0004	+.0004	+.0003	+.0003	+.0007	+.0006	+.0003	+.0002	+.0001
+.0012	+.0012	+.0007	+.0009	+.0009	+.0006	+.0005	+.0004	+.0004	+.0003	+.0003	+.0007	+.0006	+.0003	+.0002	+.0001
+.0015	+.0015	+.0009	+.0011	+.0011	+.0007	+.0006	+.0005	+.0005	+.0004	+.0003	+.0009	+.0007	+.0003	+.0002	+.0002
+.0017	+.0017	+.0010	+.0012	+.0012	+.0007	+.0007	+.0006	–	–	–	+.0010	+.0007	+.0004	–	–
+.0020	+.0020	+.0012	+.0015	+.0015	+.0009	+.0009	+.0007	–	–	–	+.0012	+.0009	+.0005	–	–
+.0022	+.0022	+.0013	+.0017	+.0017	+.0010	–	–	–	–	–	+.0013	+.0010	–	–	–
+.0025	+.0025	+.0015	+.0020	+.0020	+.0012	–	–	–	–	–	+.0015	+.0012	–	–	–
–	–	–	–	–	–	–	–	–	–	–	–	–	–	–	–
–	–	–	–	–	–	–	–	–	–	–	–	–	–	–	–
–	–	–	–	–	–	–	–	–	–	–	–	–	–	–	–
–	–	–	–	–	–	–	–	–	–	–	–	–	–	–	–
–	–	–	–	–	–	–	–	–	–	–	–	–	–	–	–

Note: [1] Applicable to bearings with cylindrical bores.

Table J.9 - Tolerances for Outer Ring O.D. of Radial Bearings (excluding Tapered Roller Bearings) (continued)

Units: inch

V_{Dp}[1]																	
Class N				Class 6				Class 5		Class 4		Class 2	V_{dmp}[1]				
Open Type			Shielded Sealed	Open Type			Shielded Sealed	Open Type		Open Type		Open Type					
Diameter Series				Diameter Series				Dia. Series		Dia. Series			Class				
7, 8, 9	0, 1	2, 3, 4	2, 3, 4	7, 8, 9	0, 1	2, 3, 4	0, 1, 2, 3, 4	7, 8, 9	0, 1, 2, 3, 4	7, 8, 9	0, 1, 2, 3, 4		N	6	5	4	2
max	max	max	max	max	max	max	max	max	max	max	max	max	max	max	max	max	max
+.0004	+.0003	+.0002	+.0004	+.0004	+.0003	+.0002	+.0004	+.0002	+.0002	+.0002	+.0001	+.0001	+.0002	+.0002	+.0001	+.0001	+.0001
+.0005	+.0004	+.0003	+.0005	+.0004	+.0003	+.0002	+.0004	+.0002	+.0002	+.0002	+.0002	+.0002	+.0003	+.0002	+.0001	+.0001	+.0001
+.0006	+.0004	+.0003	+.0005	+.0004	+.0004	+.0003	+.0005	+.0003	+.0002	+.0002	+.0002	+.0002	+.0003	+.0003	+.0002	+.0001	+.0001
+.0006	+.0005	+.0004	+.0008	+.0006	+.0004	+.0003	+.0006	+.0003	+.0003	+.0003	+.0002	+.0002	+.0004	+.0003	+.0002	+.0001	+.0001
+.0007	+.0007	+.0004	+.0010	+.0006	+.0006	+.0004	+.0008	+.0004	+.0003	+.0003	+.0002	+.0002	+.0004	+.0004	+.0002	+.0002	+.0001
+.0009	+.0009	+.0006	+.0012	+.0007	+.0007	+.0004	+.0010	+.0004	+.0003	+.0004	+.0003	+.0002	+.0006	+.0004	+.0002	+.0002	+.0001
+.0012	+.0012	+.0007	+.0015	+.0009	+.0009	+.0006	+.0012	+.0005	+.0004	+.0004	+.0003	+.0003	+.0007	+.0006	+.0003	+.0002	+.0001
+.0015	+.0015	+.0009	–	+.0010	+.0010	+.0006	–	+.0006	+.0004	+.0004	+.0003	+.0003	+.0009	+.0006	+.0003	+.0002	+.0002
+.0017	+.0017	+.0010	–	+.0012	+.0012	+.0007	–	+.0007	+.0006	+.0005	+.0004	+.0003	+.0010	+.0007	+.0004	+.0003	+.0002
+.0020	+.0020	+.0012	–	+.0014	+.0014	+.0008	–	+.0008	+.0006	+.0006	+.0004	+.0004	+.0012	+.0008	+.0004	+.0003	+.0002
+.0022	+.0022	+.0013	–	+.0016	+.0016	+.0010	–	+.0009	+.0007	–	–	–	+.0013	+.0010	+.0005	–	–
+.0025	+.0025	+.0015	–	+.0019	+.0019	+.0011	–	+.0011	+.0008	–	–	–	+.0015	+.0011	+.0006	–	–
+.0037	+.0037	+.0022	+.0022	+.0022	+.0022	+.0013	–	+.0014	+.0010	–	–	–	+.0022	+.0013	+.0007	–	–
+.0049	+.0049	+.0030	–	+.0030	+.0030	+.0018	–	–	–	–	–	–	+.0030	+.0018	–	–	–
–	–	–	–	–	–	–	–	–	–	–	–	–	–	–	–	–	–
–	–	–	–	–	–	–	–	–	–	–	–	–	–	–	–	–	–
–	–	–	–	–	–	–	–	–	–	–	–	–	–	–	–	–	–
–	–	–	–	–	–	–	–	–	–	–	–	–	–	–	–	–	–
–	–	–	–	–	–	–	–	–	–	–	–	–	–	–	–	–	–

Note: [1] Applicable only when a locating snap ring is not used.

Table J.10 - Tolerances for Inner and Outer Ring Widths of Radial Bearings (excluding Tapered Roller Bearings)

Units: inch

Nominal Bore Diameter d (mm)		$\triangle B_s$ (or C_s)[1]										V_{Bs} (or V_{Cs})[1]				
		Single Bearing						Combined Bearings [2]				Inner Ring (or Outer Ring)[2]		Inner Ring		
		Class N Class 6		Class 5 Class 4		Class 2		Class N Class 6		Class 5 Class 4		Class		Class		
												N	6	5	4	2
over	incl	high	low	high	low	high	low	high	low	high	low	max	max	max	max	max
0.6[3]	2.5	0	-.0016	0	-.0016	0	-.0016	–	–	0	-.0098	+.0005	+.0005	+.0002	+.0001	+.0001
2.5	10.0	0	-.0047	0	-.0016	0	-.0016	0	-.0098	0	-.0098	+.0006	+.0006	+.0002	+.0001	+.0001
10.0	18.0	0	-.0047	0	-.0031	0	-.0031	0	-.0098	0	-.0098	+.0008	+.0006	+.0002	+.0001	+.0001
18.0	30.0	0	-.0047	0	-.0047	0	-.0047	0	-.0098	0	-.0098	+.0008	+.0008	+.0002	+.0001	+.0001
30.0	50.0	0	-.0047	0	-.0047	0	-.0047	0	-.0098	0	-.0098	+.0008	+.0008	+.0002	+.0001	+.0001
50.0	80.0	0	-.0059	0	-.0059	0	-.0059	0	-.0150	0	-.0098	+.0010	+.0010	+.0002	+.0002	+.0001
80.0	120.0	0	-.0079	0	-.0079	0	-.0079	0	-.0150	0	-.0150	+.0010	+.0010	+.0003	+.0002	+.0001
120.0	150.0	0	-.0098	0	-.0098	0	-.0098	0	-.0197	0	-.0150	+.0012	+.0012	+.0003	+.0002	+.0001
150.0	180.0	0	-.0098	0	-.0098	0	-.0118	0	-.0197	0	-.0150	+.0012	+.0012	+.0003	+.0002	+.0002
180.0	250.0	0	-.0118	0	-.0118	0	-.0138	0	-.0197	0	-.0197	+.0012	+.0012	+.0004	+.0002	+.0002
250.0	315.0	0	-.0138	0	-.0138	–	–	0	-.0197	0	-.0197	+.0014	+.0012	+.0005	–	–
315.0	400.0	0	-.0157	0	-.0157	–	–	0	-.0248	0	-.0248	+.0016	+.0016	+.0006	–	–
400.0	500.0	0	-.0177	–	–	–	–	–	–	–	–	+.0020	+.0018	–	–	–
500.0	630.0	0	-.0197	–	–	–	–	–	–	–	–	+.0024	+.0020	–	–	–
630.0	800.0	0	-.0295	–	–	–	–	–	–	–	–	+.0028	–	–	–	–
800.0	1000.0	0	-.0394	–	–	–	–	–	–	–	–	+.0031	–	–	–	–
1000.0	1250.0	0	-.0492	–	–	–	–	–	–	–	–	+.0039	–	–	–	–
1250.0	1600.0	0	-.0630	–	–	–	–	–	–	–	–	+.0047	–	–	–	–
1600.0	2000.0	0	-.0787	–	–	–	–	–	–	–	–	+.0055	–	–	–	–

Note: [1] Tolerance for width deviation and tolerance limits for the width variation of the outer ring should be the same.
[2] Applicable to individual rings manufactured for combined bearings.
[3] 0.6mm is included in this group.

Table J.11 - Tolerances for Inner Ring Runout of Radial Bearings (excluding Tapered Roller Bearings)

Units: inch

Nominal Bore Diameter d (mm)		K_{ia}					S_d			S_{ia}[1]		
		Class N	Class 6	Class 5	Class 4	Class 2	Class 5	Class 4	Class 2	Class 5	Class 4	Class 2
over	incl	max	max	max	max	max	max	max	max	max	max	max
0.6[2]	2.5	+.0004	+.0002	+.0002	+.0001	+.0001	+.0003	+.0001	+.0001	+.0003	+.0001	+.0001
2.5	10.0	+.0004	+.0002	+.0002	+.0001	+.0001	+.0003	+.0001	+.0001	+.0003	+.0001	+.0001
10.0	18.0	+.0004	+.0003	+.0002	+.0001	+.0001	+.0003	+.0001	+.0001	+.0003	+.0001	+.0001
18.0	30.0	+.0005	+.0003	+.0002	+.0001	+.0001	+.0003	+.0002	+.0001	+.0003	+.0002	+.0001
30.0	50.0	+.0006	+.0004	+.0002	+.0002	+.0001	+.0003	+.0002	+.0001	+.0003	+.0002	+.0001
50.0	80.0	+.0008	+.0004	+.0002	+.0002	+.0001	+.0003	+.0002	+.0001	+.0003	+.0002	+.0001
80.0	120.0	+.0010	+.0005	+.0002	+.0002	+.0001	+.0004	+.0002	+.0001	+.0004	+.0002	+.0001
120.0	150.0	+.0012	+.0007	+.0003	+.0002	+.0001	+.0004	+.0002	+.0001	+.0004	+.0003	+.0001
150.0	180.0	+.0012	+.0007	+.0003	+.0002	+.0002	+.0004	+.0002	+.0002	+.0004	+.0003	+.0002
180.0	250.0	+.0016	+.0008	+.0004	+.0003	+.0002	+.0004	+.0003	+.0002	+.0005	+.0003	+.0002
250.0	315.0	+.0020	+.0010	+.0005	–	–	+.0005	–	–	+.0006	–	–
315.0	400.0	+.0024	+.0012	+.0006	–	–	+.0006	–	–	+.0008	–	–
400.0	500.0	+.0026	+.0014	–	–	–	–	–	–	–	–	–
500.0	630.0	+.0028	+.0016	–	–	–	–	–	–	–	–	–
630.0	800.0	+.0031	–	–	–	–	–	–	–	–	–	–
800.0	1000.0	+.0035	–	–	–	–	–	–	–	–	–	–
1000.0	1250.0	+.0039	–	–	–	–	–	–	–	–	–	–
1250.0	1600.0	+.0047	–	–	–	–	–	–	–	–	–	–
1600.0	2000.0	+.0055	–	–	–	–	–	–	–	–	–	–

Note: [1] Applicable to ball bearings only.
[2] 0.6mm is included in this group.

Table J.12 - Tolerances for Outer Ring Runout of Radial Bearings (excluding Tapered Roller Bearings)

Units: inch

Nominal Outside Diameter D (mm)		K_{ea}					S_D			S_{ea}[1]			V_{Cs}[2]		
		Class					Class			Class			Class		
		N	6	5	4	2	5	4	2	5	4	2	5	4	2
over	incl	max	max	max	max	max	max	max	max	max	max	max	max	max	max
2.5[3]	6.0	+.0006	+.0003	+.0002	+.0001	+.0001	+.0003	+.0002	+.0001	+.0003	+.0002	+.0001	+.0002	+.0001	+.0001
6	18.0	+.0006	+.0003	+.0002	+.0001	+.0001	+.0003	+.0002	+.0001	+.0003	+.0002	+.0001	+.0002	+.0001	+.0001
18.0	30.0	+.0006	+.0004	+.0002	+.0002	+.0001	+.0003	+.0002	+.0001	+.0003	+.0002	+.0001	+.0002	+.0001	+.0001
30.0	50.0	+.0008	+.0004	+.0003	+.0002	+.0001	+.0003	+.0002	+.0001	+.0003	+.0002	+.0001	+.0002	+.0001	+.0001
50.0	80.0	+.0010	+.0005	+.0003	+.0002	+.0002	+.0003	+.0002	+.0001	+.0003	+.0002	+.0002	+.0002	+.0001	+.0001
80.0	120.0	+.0014	+.0007	+.0004	+.0002	+.0002	+.0004	+.0002	+.0001	+.0004	+.0002	+.0002	+.0003	+.0002	+.0001
120.0	150.0	+.0016	+.0008	+.0004	+.0003	+.0002	+.0004	+.0002	+.0001	+.0005	+.0003	+.0002	+.0003	+.0002	+.0001
150.0	180.0	+.0018	+.0009	+.0005	+.0003	+.0002	+.0004	+.0002	+.0001	+.0006	+.0003	+.0002	+.0003	+.0002	+.0001
180.0	250.0	+.0020	+.0010	+.0006	+.0004	+.0003	+.0004	+.0003	+.0002	+.0006	+.0004	+.0003	+.0004	+.0003	+.0002
250.0	315.0	+.0024	+.0012	+.0007	+.0004	+.0003	+.0005	+.0003	+.0002	+.0007	+.0004	+.0003	+.0004	+.0003	+.0002
315.0	400.0	+.0028	+.0014	+.0008	+.0005	+.0003	+.0005	+.0004	+.0003	+.0008	+.0005	+.0003	+.0005	+.0003	+.0003
400.0	500.0	+.0031	+.0016	+.0009	–	–	+.0006	–	–	+.0009	–	–	+.0006	–	–
500.0	630.0	+.0039	+.0020	+.0010	–	–	+.0007	–	–	+.0010	–	–	+.0007	–	–
630.0	800.0	+.0047	+.0024	+.0012	–	–	+.0008	–	–	+.0012	–	–	+.0008	–	–
800.0	1000.0	+.0055	+.0030	–	–	–	–	–	–	–	–	–	–	–	–
1000.0	1250.0	+.0063	–	–	–	–	–	–	–	–	–	–	–	–	–
1250.0	1600.0	+.0075	–	–	–	–	–	–	–	–	–	–	–	–	–
1600.0	2000.0	+.0087	–	–	–	–	–	–	–	–	–	–	–	–	–
2000.0	2500.0	+.0098	–	–	–	–	–	–	–	–	–	–	–	–	–

Note: [1] Tolerance for width deviation and tolerance limits for the width variation of the outer ring should be the same bearing.
[2] Aplicable to individual rings manufactured for combined bearings.
[3] 2.5 mm is included within this group.

Table J.13 - Tolerance of Bore Diameter of Inner Ring

Unit: µm

Bore Over	Diameter Incl.	P4		P4Y (Controlled to median value)	
		High	Low	High	Low
30	50	0	-6		-3
50	80	0	-7	-2	-5
80	120	0	-8	-3	-6
120	150	0	-10	-3	-7

Tolerances for bearings under 30mm bore are the same as values quoted between 30 and 50 mm bore.

Class 4Y is NSK's proprietary accuracy standard, in which tolerance of a bearing bore diameter and an outer ring diameter are in a special class (controlled to medium value) and other tolerances are Class 4. Class 4Y has the same running accuracy as Class 4 but has a narrower tolerance range of bore and outer diameter than Class 4. It is suitable for universal combination bearings.

Table J.14 - Tolerance of Outer Diameter of Outer Ring

Unit: µm

Outer Over	Diameter Incl.	P4		P4Y (Controlled to median value)	
		High	Low	High	Low
50	80	0	-7	-2	-6
80	120	0	-8	-2	-6
120	150	0	-9	-3	-7
150	180	0	-10	-3	-7
180	200	0	-11	-4	-9
200	Under 215	0	-11	-2	-9

Tolerances for bearings under 50mm outer diameter are the same as values quoted for bearings with outer diameters between 50-80mm outer diameter.

Class 4Y is NSK's proprietary accuracy standard, in which tolerance of a bearing bore diameter and an outer ring diameter are in a special class (controlled to medium value) and other tolerances are Class 4. Class 4Y has the same running accuracy as Class 4 but has a narrower tolerance range of bore and outer diameter than Class 4. It is suitable for universal combination bearings.

Table J.15 - Tolerances for Inner Ring Bore Diameter of Metric Tapered Roller Bearings

Units: inch

Nominal Bore Diameter d (mm)		△dmp						△ds		Vdp				Vdmp			
		Class N Class 6X		Class 6 Class 5		Class 4		Class 4		Class				Class			
										N, 6X	6	5	4	N, 6X	6	5	4
over	incl	high	low	high	low	high	low	high	low	max	max	max	max	max	max	max	max
10.0	18.0	0	-.0003	0	-.0003	0	-.0002	0	-.0002	+.0003	+.0003	+.0002	+.0002	+.0002	+.0002	+.0002	+.0002
18.0	30.0	0	-.0004	0	-.0003	0	-.0002	0	-.0002	+.0004	+.0003	+.0002	+.0002	+.0003	+.0002	+.0002	+.0002
30.0	50.0	0	-.0005	0	-.0004	0	-.0003	0	-.0003	+.0005	+.0004	+.0003	+.0002	+.0004	+.0003	+.0002	+.0002
50.0	80.0	0	-.0006	0	-.0005	0	-.0004	0	-.0004	+.0006	+.0005	+.0004	+.0003	+.0004	+.0004	+.0002	+.0002
80.0	120.0	0	-.0008	0	-.0006	0	-.0004	0	-.0004	+.0008	+.0006	+.0004	+.0003	+.0006	+.0004	+.0003	+.0002
120.0	180.0	0	-.0010	0	-.0007	0	-.0005	0	-.0005	+.0010	+.0007	+.0006	+.0004	+.0007	+.0006	+.0004	+.0003
180.0	250.0	0	-.0012	0	-.0009	0	-.0006	0	-.0006	+.0012	+.0009	+.0007	+.0004	+.0009	+.0006	+.0004	+.0003
250.0	315.0	0	-.0014	0	-.0010	0	-.0007	0	-.0007	+.0014	–	–	–	+.0010	+.0006	–	–
315.0	400.0	0	-.0016	0	-.0012	0	-.0009	0	-.0009	+.0016	–	–	–	+.0012	–	–	–
400.0	500.0	0	-.0018	0	-.0014	0	-.0011	0	-.0011	–	–	–	–	–	–	–	–
500.0	630.0	0	-.0020	0	-.0016	–	–	–	–	–	–	–	–	–	–	–	–
630.0	800.0	0	-.0030	0	-.0024	–	–	–	–	–	–	–	–	–	–	–	–

Remarks: (1) The outside diameter "no-go side" tolerances (high) specified in this table do not necessarily apply within a distance of 1.2 times the chamfer dimension r (max) from the ring face.

(2) Some of these tolerances conform to the NSK standard, and not ISO standards.

Table J.16 - Tolerances for Outer Ring Diameter of Metric Tapered Roller Bearings

Units: inch

Nominal Outside Diameter D (mm)		△dmp						△ds		Vdp				Vdmp			
		Class N Class 6X		Class 6 Class 5		Class 4		Class 4		Class				Class			
										N, 6X	6	5	4	N, 6X	6	5	4
over	incl	high	low	high	low	high	low	high	low	max	max	max	max	max	max	max	max
18.0	30.0	0	-.0004	0	-.0003	0	-.0002	0	-.0002	+.0004	+.0003	+.0002	+.0002	+.0003	+.0002	+.0002	+.0002
30.0	50.0	0	-.0004	0	-.0004	0	-.0003	0	-.0003	+.0004	+.0004	+.0003	+.0002	+.0003	+.0003	+.0002	+.0002
50.0	80.0	0	-.0005	0	-.0004	0	-.0004	0	-.0004	+.0005	+.0004	+.0003	+.0003	+.0004	+.0003	+.0002	+.0002
80.0	120.0	0	-.0006	0	-.0005	0	-.0004	0	-.0004	+.0006	+.0005	+.0004	+.0003	+.0004	+.0004	+.0003	+.0002
120.0	150.0	0	-.0007	0	-.0006	0	-.0004	0	-.0004	+.0007	+.0006	+.0004	+.0003	+.0006	+.0004	+.0003	+.0002
150.0	180.0	0	-.0010	0	-.0007	0	-.0005	0	-.0005	+.0010	+.0007	+.0006	+.0004	+.0007	+.0006	+.0004	+.0003
180.0	250.0	0	-.0012	0	-.0008	0	-.0006	0	-.0006	+.0012	+.0008	+.0006	+.0004	+.0009	+.0006	+.0004	+.0003
250.0	315.0	0	-.0014	0	-.0010	0	-.0007	0	-.0007	+.0014	+.0010	+.0007	+.0006	+.0010	+.0007	+.0005	+.0004
315.0	400.0	0	-.0016	0	-.0011	0	-.0008	0	-.0008	+.0016	+.0011	+.0009	+.0006	+.0012	+.0008	+.0006	+.0004
400.0	500.0	0	-.0018	0	-.0013	0	-.0009	0	-.0009	+.0018	–	–	–	+.0013	–	–	–
500.0	630.0	0	-.0020	0	-.0015	–	-.0011	–	-.0011	+.0020	–	–	–	+.0015	–	–	–
630.0	800.0	0	-.0030	0	-.0018	–	–	–	–	–	–	–	–	–	–	–	–
800.0	1000.0	0	-.0039	0	-.0024	–	–	–	–	–	–	–	–	–	–	–	–

Remarks: (1) The outside diameter "no-go side" tolerances (high) specified in this table do not necessarily apply within a distance of 1.2 times the chamfer dimension r (max) from the ring face.

(2) Some of these tolerances conform to the NSK standard, and not ISO standards.

Table J.17 - Tolerances for Inner Ring Accuracy of Metric Tapered Bearings

Units: inch

Nominal Bore Diameter d (mm)		K_{ia}				S_d		S_{ia}
		Class N Class 6X	Class 6	Class 5	Class 4	Class 5	Class 4	Class 4
over	incl	max	max	max	max	max	max	max
10	18	+.0006	+.0003	+.0001	+.0001	+.0003	+.0001	+.0001
18	30.0	+.0007	+.0003	+.0002	+.0001	+.0003	+.0002	+.0002
30.0	50.0	+.0008	+.0004	+.0002	+.0002	+.0003	+.0002	+.0002
50.0	80.0	+.0010	+.0004	+.0002	+.0002	+.0003	+.0002	+.0002
80.0	120.0	+.0012	+.0005	+.0002	+.0002	+.0004	+.0002	+.0002
120.0	180.0	+.0014	+.0007	+.0003	+.0002	+.0004	+.0002	+.0003
180.0	250.0	+.0020	+.0008	+.0004	+.0003	+.0004	+.0003	+.0003
250.0	315.0	+.0024	+.0010	+.0005	+.0004	+.0005	+.0003	+.0004
315.0	400.0	+.0028	+.0012	+.0006	+.0005	+.0006	+.0004	+.0006
400.0	500.0	+.0028	+.0014	+.0007	+.0006	+.0007	+.0005	+.0007
500.0	630.0	+.0033	+.0016	+.0008	--	+.0009	--	--
630.0	800.0	+.0039	+.0018	+.0009	--	+.0011	--	--

Table J.18 - Tolerances for Outer Ring Accuracy of Metric Tapered Bearings

Units: inch

Nominal Outside Diameter D (mm)		K_{ea}				S_D		S_{ea}
		Class N Class 6X	Class 6	Class 5	Class 4	Class 5	Class 4	Class 4
over	incl	max	max	max	max	max	max	max
18.0	30.0	+.0007	+.0004	+.0002	+.0002	+.0003	+.0002	+.0002
30.0	50.0	+.0008	+.0004	+.0003	+.0002	+.0003	+.0002	+.0002
50.0	80.0	+.0010	+.0005	+.0003	+.0002	+.0003	+.0002	+.0002
80.0	120.0	+.0014	+.0007	+.0004	+.0002	+.0004	+.0002	+.0002
120.0	150.0	+.0016	+.0008	+.0004	+.0003	+.0004	+.0002	+.0003
150.0	180.0	+.0018	+.0009	+.0005	+.0003	+.0004	+.0002	+.0003
180.0	250.0	+.0020	+.0010	+.0006	+.0004	+.0004	+.0003	+.0004
250.0	315.0	+.0024	+.0012	+.0007	+.0004	+.0005	+.0003	+.0004
315.0	400.0	+.0028	+.0014	+.0008	+.0005	+.0005	+.0004	+.0005
400.0	500.0	+.0031	+.0016	+.0009	+.0006	+.0006	+.0004	+.0006
500.0	630.0	+.0039	+.0020	+.0010	+.0007	+.0007	+.0005	+.0007
630.0	800.0	+.0047	+.0024	+.0012	--	+.0008	--	--
800.0	1000.0	+.0047	+.0030	+.0014	--	+.0009	--	--

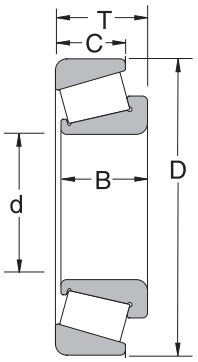

Single Row

Table J.19 - Tolerances for Cone Width, Cup Width, and Combined Cone/Cup Width of Metric Tapered Roller Bearings

Units: inch

Nominal Bore Diameter d (mm)		$\triangle B_S$						$\triangle C_S$						$\triangle T_S$					
		Class N Class 6		Class 6X		Class 5 Class 4		Class N Class 6		Class 6X		Class 5 Class 4		Class N Class 6		Class 6X		Class 5 Class 4	
over	incl	high	low	high	low	high	low	high	low	high	low	high	low	high	low	high	low	high	low
10.0	18.0	0	-.0047	0	-.0020	0	-.0079	0	-.0047	0	-.0039	0	-.0079	-.0079	.0000	+.0039	0	+.0079	-.0079
18.0	30.0	0	-.0047	0	-.0020	0	-.0079	0	-.0047	0	-.0039	0	-.0079	-.0079	.0000	+.0039	0	+.0079	-.0079
30.0	50.0	0	-.0047	0	-.0020	0	-.0094	0	-.0047	0	-.0039	0	-.0094	-.0079	.0000	+.0039	0	+.0079	-.0079
50.0	80.0	0	-.0059	0	-.0020	0	-.0118	0	-.0059	0	-.0039	0	-.0118	-.0079	.0000	+.0039	0	+.0079	-.0079
80.0	120.0	0	-.0079	0	-.0020	0	-.0157	0	-.0079	0	-.0039	0	-.0157	.0079	-.0079	+.0039	0	+.0079	-.0079
120.0	180.0	0	-.0098	0	-.0020	0	-.0197	0	-.0098	0	-.0039	0	-.0197	.0138	-.0098	+.0059	0	+.0138	-.0098
180.0	250.0	0	-.0118	0	-.0020	0	-.0197	0	-.0118	0	-.0039	0	-.0197	.0138	-.0098	+.0059	0	+.0209	-.0098
250.0	315.0	0	-.0138	0	-.0020	0	-.0276	0	-.0138	0	-.0039	0	-.0276	.0138	-.0098	+.0079	0	+.0209	-.0098
315.0	400.0	0	-.0157	0	-.0020	0	-.0315	0	-.0157	0	-.0039	0	-.0315	.0157	-.0157	+.0079	0	+.0157	-.0157
400.0	500.0	0	-.0177	–	–	0	-.0315	0	-.0177	–	–	0	-.0315	.0157	-.0157	–	–	+.0157	-.0157
500.0	630.0	0	-.0197	–	–	0	-.0315	0	-.0197	–	–	0	-.0315	.0197	-.0197	–	–	+.0197	-.0197
630.0	800.0	0	-.0295	–	–	0	-.0315	0	-.0295	–	–	0	-.0315	.0236	-.0236	–	–	+.0236	-.0236

Remarks: (1) The effective width of a cone with rollers T1 is defined as the overall bearing width of a cone with rollers combined with a master cup.
(2) The effective width of a cup T2 is defined as the overall bearing width of a cup combined with a master cone with rollers.

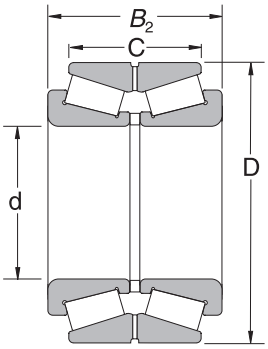

KBE Type

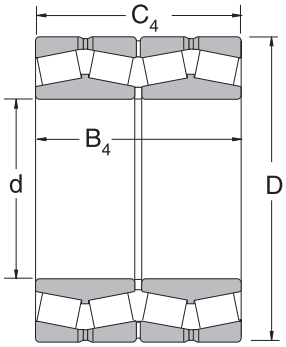

KV Type

Table J.19 - Tolerances for Cone Width, Cup Width, and Combined Cone/Cup Width of Metric Tapered Roller Bearings (continued)

Units: inch

Nominal Bore Diameter d (mm)		Effective Cone Width (with Rollers) Deviation $\triangle T_{1s}$				Effective Cup Width Deviation $\triangle T_{2s}$				Overall Combined Bearing Width Deviation			
										$\triangle B_{2s}$		$\triangle B_{4s}$, $\triangle C_{4s}$	
		Class N		Class 6X		Class N		Class 6X		All classes of double-row bearings		All classes of four-row bearings	
over	incl	high	low	high	low	high	low	high	low	high	low	high	low
10.0	18.0	+.0039	0	+.0020	0	+.0039	0	+.0020	0	+.0079	-.0079	–	–
18.0	30.0	+.0039	0	+.0020	0	+.0039	0	+.0020	0	+.0079	-.0079	–	–
30.0	50.0	+.0039	0	+.0020	0	+.0039	0	+.0020	0	+.0079	-.0079	–	–
50.0	80.0	+.0039	0	+.0020	0	+.0039	0	+.0020	0	+.0118	-.0118	+.0118	-.0118
80.0	120.0	+.0039	-.0039	+.0020	0	+.0039	-.0039	+.0020	0	+.0118	-.0118	+.0157	-.0157
120.0	180.0	+.0059	-.0059	+.0020	0	+.0079	-.0039	+.0039	0	+.0157	-.0157	+.0197	-.0197
180.0	250.0	+.0059	-.0059	+.0020	0	+.0079	-.0039	+.0039	0	+.0177	-.0177	+.0236	-.0236
250.0	315.0	+.0059	-.0059	+.0039	0	+.0079	-.0039	+.0039	0	+.0217	-.0217	+.0276	-.0276
315.0	400.0	+.0079	-.0079	+.0039	0	+.0079	-.0079	+.0039	0	+.0236	-.0236	+.0315	-.0315
400.0	500.0	–	–	–	–	–	–	–	–	+.0276	-.0276	+.0354	-.0354
500.0	630.0	–	–	–	–	–	–	–	–	+.0315	-.0315	+.0394	-.0394
630.0	800.0	–	–	–	–	–	–	–	–	+.0472	-.0472	+.0591	-.0591

BEARING TOLERANCES (CONT.)

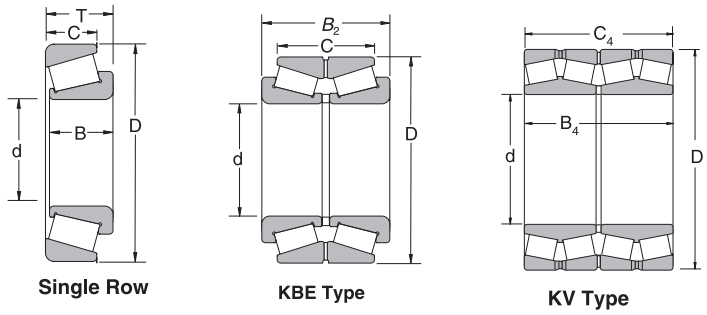

Table J.20 - Tolerances for Outer Ring Outside Diameter and Radial Runout of Inch Tapered Roller Bearings

Units: inch

Nominal Outside Diameter D (in)		△Ds					
		Class 4, 2		Class 3, 0		Class 00	
over	incl.	high	low	high	low	high	low
	10.5000	+.0010	0	+.0005	0	+.0003	0
10.5000	12.0000	+.0010	0	+.0005	0	–	–
12.0000	24.0000	+.0020	0	+.0010	0	–	–
24.0000	36.0000	+.0030	0	+.0015	0	–	–
36.0000	48.0000	+.0040	0	+.0020	0	–	–
48.0000		+.0050	0	+.0030	0	–	–

Table J.21 - Tolerances for Overall Width and Combined Width of Inch Tapered Roller Bearings

Units: inch

Nominal Bore Diameter d (in)		△Ts									
		Class 4		Class 2		Class 3, 0				Class 0 Class 00	
						D ≤ 508.000mm		D>508.000mm			
over	incl.	high	low	high	low	high	low	high	low	high	low
	4.0000	+.0080	–	+.0080	–	+.0080	-.0080	+.0080	-.0080	+.0080	-.0080
4.0000	12.0000	+.0140	-.0100	+.0080	–	+.0080	-.0080	+.0080	-.0080	+.0080	-.0080
12.0000	24.0000	+.0150	-.0150	+.0150	-.0150	+.0080	-.0080	+.0150	-.0150	–	–
24.0000		+.0150	-.0150	–	–	+.0150	-.0150	+.0150	-.0150	–	–

Table J.22 - Tolerances for Inner Ring Bore of Inch Design Tapered Roller Bearings

Units: inch

Nominal Bore Diameter d (in)		$\triangle d_S$					
		Class 4, 2		Class 3, 0		Class 00	
over	incl	high	low	high	low	high	low
	3.0000	+.0005	0	+.0005	0	+.0003	0
3.0000	10.5000	+.0010	0	+.0005	0	+.0003	0
10.5000	12.0000	+.0010	0	+.0005	0	–	–
12.0000	24.0000	+.0020	0	+.0010	0	–	–
24.0000	36.0000	+.0030	0	+.0015	0	–	–
36.0000	48.0000	+.0040	0	+.0020	0	–	–
48.0000		+.0050	0	+.0030	0	–	–

Table J.20 - Tolerances for Outer Ring Outside Diameter and Radial Runout of Inch Tapered Roller Bearings (continued)

Units: inch

K_{ia}, K_{ea}				
Class 4	Class 2	Class 3	Class 0	Class 00
max	max	max	max	max
.0020	.0015	.0003	.0002	.0001
.0020	.0015	.0003	.0002	–
.0020	.0015	.0003	–	–
.0030	.0020	.0020	–	–
.0030	–	.0030	–	–
.0030	–	.0030	–	–

Table J.21 - Tolerances for Overall Width and Combined Width of Inch Tapered Roller Bearings (continued)

Units: inch

Double-Row Bearings (KBE Type) $ØB_{2s}$										Four-Row Bearings (KV Type) $ØB_{4s}$, $ØC_{4s}$	
Class 4		Class 2		Class 3, 0				Class 0, 00		Class 4, 3, 0	
				D ≤ 508.000mm		D > 508.000mm					
high	low	high	low	high	low	high	low	high	low	high	low
+.0160	0	+.0160	0	+.0160	-.0160	+.0160	-.0160	+.0160	-.0160	+.0600	-.0600
+.0280	-.0200	+.0160	-0.008	+.0160	-.0160	+.0160	-.0160	+.0160	-.0160	+.0600	-.0600
+.0300	-.0300	+.0300	-0.030	+.0160	-.0160	+.0308	-.0308	–	–	+.0600	-.0600
+.0300	-.0300	–	–	+.0300	-.0300	+.0308	-.0308	–	–	+.0600	-.0600

Table J.23 - Tolerances for Shaft Washer Bore Diameter and Running Accuracy of Thrust Ball Bearings

Units: inch

Nominal Bore Diameter d or d_2 (mm)		$Ød_{mp}$ or $Ød_{2mp}$				V_{dp} or V_{d2p}		S_i or S_e (1)			
		Class N, 6, 5		Class 4		Class N, 6, 5	Class 4	Class N	Class 6	Class 5	Class 4
over	incl	high	low	high	low	max	max	max	max	max	max
	18	0	-.0003	0	-.0003	.0002	.0002	.0004	.0002	.0001	.0001
18	30	0	-.0004	0	-.0003	.0003	.0002	.0004	.0002	.0001	.0001
30	50	0	-.0005	0	-.0004	.0004	.0003	.0004	.0002	.0001	.0001
50	80	0	-.0006	0	-.0005	.0004	.0004	.0004	.0003	.0002	.0001
80	120	0	-.0008	0	-.0006	.0006	.0004	.0006	.0003	.0002	.0001
120	180	0	-.0010	0	-.0007	.0007	.0006	.0006	.0004	.0002	.0002
180	250	0	-.0012	0	-.0009	.0009	.0007	.0008	.0004	.0002	.0002
250	315	0	-.0014	0	-.0010	.0010	.0007	.0010	.0005	.0003	.0002
315	400	0	-.0016	0	-.0012	.0012	.0009	.0012	.0006	.0003	.0002
400	500	0	-.0018	0	-.0014	.0013	.0010	.0012	.0007	.0004	.0002
500	630	0	-.0020	0	-.0016	.0015	.0012	.0014	.0008	.0004	.0003
630	800	0	-.0030	0	-.0020	–	–	.0016	.0010	.0005	.0003
800	1000	0	-.0039	–	–	–	–	.0018	.0012	.0006	–
1000	1250	0	-.0049	–	–	–	–	.0020	.0014	.0007	–

Note: (1) For double-direction bearings, the thickness variation doesn't depend on the bore diameter d_2, but on d for single-direction bearings with the same D in the same diameter series.
Remarks: The thickness variation of housing washers, S_e, applies only to flat-seat thrust bearings.

Table J.24 - Tolerances for Outside Diameter of Housing Washers and Aligning Seat Washers of Thrust Ball Bearings

Units: inch

Nominal Outside Diameter of Bearing or Aligning Seat Washer D or D_3 (mm)		ØDmp						V_{Dp}		Aligning Seat Washer Outside Diameter Deviation $ØD_{3s}$	
		Flat Seat Type				Aligning Seat Washer Type		Class N, 6, 5	Class 4		
		Class N, 6, 5		Class 4		Class N, 6				Class N, 6	
over	incl	high	low	high	low	high	low	max	max	high	low
10	18	0	-.0004	.0000	-.0003	.0000	-.0007	+0.0003	+0.0002	.0000	-.0010
18	30	0	-.0005	.0000	-.0003	.0000	-.0008	+0.0004	+0.0002	.0000	-.0012
30	50	0	-.0006	.0000	-.0004	.0000	-.0009	+0.0005	+0.0003	.0000	-.0014
50	80	0	-.0007	.0000	-.0004	.0000	-.0011	+0.0006	+0.0003	.0000	-.0018
80	120	0	-.0009	.0000	-.0005	.0000	-.0013	+0.0007	+0.0004	.0000	-.0024
120	180	0	-.0010	.0000	-.0006	.0000	-.0015	+0.0007	+0.0004	.0000	-.0030
180	250	0	-.0012	.0000	-.0008	.0000	-.0018	+0.0009	+0.0006	.0000	-.0035
250	315	0	-.0014	.0000	-.0010	.0000	-.0021	+0.0010	+0.0007	.0000	-.0041
315	400	0	-.0016	.0000	-.0011	.0000	-.0024	+0.0012	+0.0008	.0000	-.0047
400	500	0	-.0018	.0000	-.0013	.0000	-.0027	+0.0013	+0.0010	.0000	-.0053
500	630	0	-.0020	.0000	-.0015	.0000	-.0030	+0.0015	+0.0011	.0000	-.0071
630	800	0	-.0030	.0000	-.0018	.0000	-.0044	+0.0022	+0.0013	.0000	-.0089
800	1000	0	-.0039	–	–	–	–	+0.0030	–	–	–
1000	1250	0	-.0049	–	–	–	–	–	–	–	–
1250	1600	0	-.0063	–	–	–	–	–	–	–	–

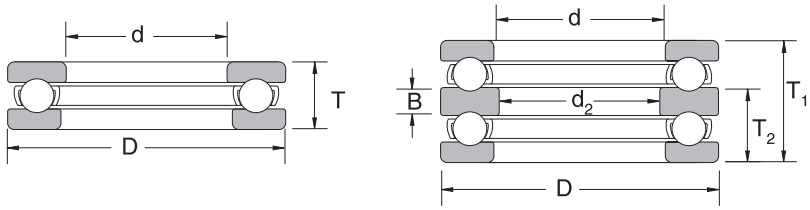

Table J.25 - Tolerances for Thrust Ball Bearing Height and Central Washer Height

Units: inch

Nominal Bore Diameter d (mm)		Flat Seat Type				Aligning Seat Washer Type				With Aligning Seat Washer				Height Deviation of Central Washer $ØB_s$[1]	
		$ØT_s$ or $ØT_{2s}$		$ØT_{1s}$		$ØT_{3s}$ or $ØT_{5s}$		$ØT_{5s}$		$ØT_{4s}$ or $ØT_{8s}$		$ØT_{1s}$			
		Class N, 6, 5, 4		Class N, 6, 5, 4		Class N, 6		Class N, 6		Class N, 6		Class N, 6		Class N, 6, 5, 4	
over	incl.	high	low	high	low	high	low	high	low	high	low	high	low	high	low
	30	+0	-.0030	+.0020	-.0059	+0	-.0030	+.0020	-.0059	+.0020	-.0030	+.0059	-.0059	+0	-.0020
30	50	+0	-.0039	+.0030	-.0079	+0	-.0039	+.0030	-.0079	+.0020	-.0039	+.0069	-.0079	+0	-.0030
50	80	+0	-.0049	+.0039	-.0098	+0	-.0049	+.0039	-.0098	+.0030	-.0049	+.0098	-.0098	+0	-.0039
80	120	+0	-.0059	+.0049	-.0118	+0	-.0059	+.0049	-.0118	+.0030	-.0059	+.0108	-.0118	+0	-.0049
120	180	+0	-.0069	+.0059	-.0138	+0	-.0069	+.0059	-.0138	+.0039	-.0069	+.0138	-.0138	+0	-.0059
180	250	+0	-.0079	+.0069	-.0157	+0	-.0079	+.0069	-.0157	+.0039	-.0079	+.0148	-.0157	+0	-.0069
250	315	+0	-.0089	+.0079	-.0177	+0	-.0089	+.0079	-.0177	+.0049	-.0089	+.0177	-.0177	+0	-.0079
315	400	+0	-.0118	+.0098	-.0236	+0	-.0118	+.0098	-.0236	+.0059	-.0108	+.0217	-.0217	+0	-.0098

Note: [1] For double-direction bearings, the thickness variation doesn't depend on the bore diameter d_2, but on d for singe-direction bearings with the same D in the same diameter series.

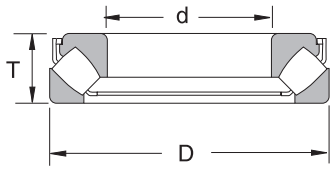

Table J.26 - Tolerances for Bore Diameters of Inner Rings and Height (Class N) of Spherical Thrust Roller Bearings

Units: inch

Nominal Bore Diameter d (mm)		$Ød_{mp}$		V_{dp}	Reference		
					S_d	$ØT_s$	
over	incl	high	low	max	max	high	low
50	80	0	-.0006	.0004	.0010	+.0059	-.0059
80	120	0	-.0008	.0006	.0010	+.0079	-.0079
120	180	0	-.0010	.0007	.0012	+.0098	-.0098
180	250	0	-.0012	.0009	.0012	+.0118	-.0118
250	315	0	-.0014	.0010	.0014	+.0138	-.0138
315	400	0	-.0016	.0012	.0016	+.0157	-.0157
400	500	0	-.0018	.0013	.0018	+.0177	-.0177

Table J.27 - Tolerances for Outer Ring Diameter (Class N) of Spherical Thrust Roller Bearings

Units: inch

Nominal Outside Diameter D (mm)		$ØD_{mp}$	
over	incl	high	low
120	180	0	-.0010
180	250	0	-.0012
250	315	0	-.0014
315	400	0	-.0016
400	500	0	-.0018
500	630	0	-.0020
630	800	0	-.0030
800	1000	0	-.0039

TOLERANCES FOR SHAFT DIAMETERS

Table J.28 - Tolerances for Shaft Diameters

Units: inch

Shaft Diameter (mm)		Bearing Bore Tolerance	Shaft Tolerance							
over	incl.	ABEC1	g6	h6	h9	h10	js5	js6	k5	k6
3	6	+0	-0.0002	+0	+0	+0	±0.0001	±0.0002	+0.0002	+0.0004
		-0.0003	-0.0005	-0.0003	-0.0012	-0.0019			+0	+0
6	10	+0	-0.0002	+0	+0	+0	±0.0001	±0.0002	+0.0003	+0.0004
		-0.0003	-0.0006	-0.0004	-0.0014	-0.0023			+0	+0
10	18	+0	-0.0002	+0	+0	+0	±0.0002	±0.0002	+0.0004	+0.0005
		-0.0003	-0.0007	-0.0004	-0.0017	-0.0028			+0	+0
18	30	+0	-0.0003	+0	+0	+0	±0.0002	±0.0003	+0.0004	+0.0006
		-0.0004	-0.0008	-0.0005	-0.002	-0.0033			+0.0001	+0.0001
30	50	+0	-0.0004	+0	+0	+0	±0.0002	±0.0003	+0.0005	+0.0007
		-0.0005	-0.0010	-0.0006	-0.0024	-0.0039			+0.0001	+0.0001
50	80	+0	-0.0004	+0	+0	+0	±0.0003	±0.0004	+0.0006	+0.0008
		-0.0006	-0.0011	-0.0007	-0.0029	-0.0047			+0.0001	+0.0001
80	120	+0	-0.0005	+0	+0	+0	±0.0003	±0.0004	+0.0007	+0.0010
		-0.0008	-0.0013	-0.0009	-0.0034	-0.0055			+0.0001	+0.0001
120	180	+0	-0.0006	+0	+0	+0	±0.0004	±0.0005	+0.0008	+0.0011
		-0.001	-0.0015	-0.001	-0.0039	-0.0063			+0.0001	+0.0001
180	250	+0	-0.0006	+0	+0	+0	±0.0004	±0.0006	+0.0009	+0.0013
		-0.0012	-0.0017	-0.0011	-0.0045	-0.0073			+0.0002	+0.0002
250	315	+0	-0.0007	+0	+0	+0	±0.0005	±0.0006	+0.0011	+0.0014
		-0.0014	-0.0019	-0.0013	-0.0051	-0.0083			+0.0002	+0.0002
315	400	+0	-0.0007	+0	+0	+0	±0.0005	±0.0007	+0.0011	+0.0016
		-0.0016	-0.0021	-0.0014	-0.0055	-0.0091			+0.0002	+0.0002
400	500	+0	-0.0008	+0	+0	+0	±0.0005	±0.0008	+0.0013	+0.0018
		-0.0018	-0.0024	-0.0016	-0.0061	-0.0098			+0.0002	+0.0002
500	630	+0	-0.0009	+0	+0	+0	–	±0.0009	–	+0.0017
		-0.002	-0.0026	-0.0017	-0.0069	-0.011			–	+0
630	800	+0	-0.0009	+0	+0	+0	–	±0.0010	–	+0.0020
		-0.003	-0.0029	-0.002	-0.0079	-0.0126			–	+0
800	1000	+0	-0.0010	+0	+0	+0	–	±0.0011	–	+0.0022
		-0.0039	-0.0032	-0.0022	-0.0091	-0.0142			–	+0
1000	1250	+0	-0.0011	+0	+0	+0	–	±0.0013	–	+0.0026
		-0.0049	-0.0037	-0.0026	-0.0102	-0.0165			–	+0
1250	1600	+0	-0.0012	+0	+0	+0	–	±0.0015	–	+0.0031
		-0.0063	-0.0043	-0.0031	-0.0122	-0.0197			–	+0
1600	2000	+0	-0.0013	+0	+0	+0	–	±0.0018	–	+0.0036
		-0.0079	-0.0049	-0.0036	-0.0146	-0.0236				+0

Directions: The shaft tolerances are determined by adding the top number in the tolerance group to the shaft size and adding the bottom number to the shaft size. This provides the maximum shaft size and the minimum shaft size, respectively.

For example:

Shaft size = 0.4724″
Application = Electric Motor (Recommended shaft fit js6)
Shaft Tolerance (max) = 0.4724″ + 0.0002″ = 0.4726″
Shaft Tolerance (min) = 0.4724″ - 0.0002″ = 0.4722″

Table J.28 - Tolerances for Shaft Diameters (continued)

Units: inch

Shaft Diameter (mm)		Shaft Tolerance			
over	incl.	m5	m6	n6	p6
3	6	+0.0004	+0.0005	+0.0006	+0.0008
		+0.0002	+0.0002	+0.0003	+0.0005
6	10	+0.0005	+0.0006	+0.0007	+0.0009
		+0.0002	+0.0002	+0.0004	+0.0006
10	18	+0.0006	+0.0007	+0.0009	+0.0011
		+0.0003	+0.0003	+0.0005	+0.0007
18	30	+0.0007	+0.0008	+0.0011	+0.0014
		+0.0003	+0.0003	+0.0006	+0.0009
30	50	+0.0008	+0.0010	+0.0013	+0.0017
		+0.0004	+0.0004	+0.0007	+0.0010
50	80	+0.0009	+0.0012	+0.0015	+0.0020
		+0.0004	+0.0004	+0.0008	+0.0013
80	120	+0.0011	+0.0014	+0.0018	+0.0023
		+0.0005	+0.0005	+0.0009	+0.0015
120	180	+0.0013	+0.0016	+0.0020	+0.0027
		+0.0006	+0.0006	+0.0011	+0.0017
180	250	+0.0015	+0.0018	+0.0024	+0.0031
		+0.0007	+0.0007	+0.0012	+0.0020
250	315	+0.0017	+0.0020	+0.0026	+0.0035
		+0.0008	+0.0008	+0.0013	+0.0022
315	400	+0.0018	+0.0022	+0.0029	+0.0039
		+0.0008	+0.0008	+0.0015	+0.0024
400	500	+0.0020	+0.0025	+0.0031	+0.0043
		+0.0009	+0.0009	+0.0016	+0.0027
500	630	–	+0.0028	+0.0035	+0.0048
		–	+0.0010	+0.0017	+0.0031
630	800	–	+0.0031	+0.0039	+0.0054
		–	+0.0012	+0.0020	+0.0035
800	1000	–	+0.0035	+0.0044	+0.0061
		–	+0.0013	+0.0022	+0.0039
1000	1250	–	+0.0042	+0.0052	+0.0073
		–	+0.0016	+0.0026	+0.0047
1250	1600	–	+0.0050	+0.0061	+0.0086
		–	+0.0019	+0.0031	+0.0055
1600	2000	–	+0.0059	+0.0072	+0.0103
			+0.0023	+0.0036	+0.0067

Shaft Diameter (inch)		Shaft Tolerance	
over	incl.	r6	r7
3	6	+0.0009	+0.0007
		+0.0006	+0.0006
6	10	+0.0011	+0.0013
		+0.0007	+0.0007
10	18	+0.0013	+0.0016
		+0.0009	+0.0009
18	30	+0.0016	+0.0019
		+0.0011	+0.0011
30	50	+0.0020	+0.0023
		+0.0013	+0.0013
50	65	+0.0024	+0.0028
		+0.0016	+0.0016
65	80	+0.0024	+0.0029
		+0.0017	+0.0017
80	100	+0.0029	+0.0034
		+0.0020	+0.0020
100	120	+0.0030	+0.0035
		+0.0021	+0.0021
120	140	+0.0035	+0.0041
		+0.0025	+0.0025
140	160	+0.0035	+0.0041
		+0.0026	+0.0026
160	180	+0.0037	+0.0043
		+0.0027	+0.0027
180	200	+0.0042	+0.0048
		+0.0030	+0.0030
200	225	+0.0043	+0.0050
		+0.0031	+0.0031
225	250	+0.0044	+0.0051
		+0.0033	+0.0033
250	280	+0.0050	+0.0057
		+0.0037	+0.0037
280	315	+0.0051	+0.0059
		+0.0039	+0.0039
315	355	+0.0057	+0.0065
		+0.0043	+0.0043
355	400	+0.0059	+0.0067
		+0.0045	+0.0045
400	450	+0.0065	+0.0074
		+0.0050	+0.0050
450	500	+0.0068	+0.0077
		+0.0052	+0.0052
500	560	+0.0076	+0.0087
		+0.0059	+0.0059
560	630	+0.0078	+0.0089
		+0.0061	+0.0061
630	710	+0.0089	+0.0100
		+0.0069	+0.0069
710	800	+0.0093	+0.0104
		+0.0073	+0.0073
800	900	+0.0105	+0.0118
		+0.0083	+0.0083
900	1000	+0.0109	+0.0122
		+0.0087	+0.0087
1000	1120	+0.0124	+0.0140
		+0.0098	+0.0098
1120	1250	+0.0128	+0.0144
		+0.0102	+0.0102
1250	1400	+0.0149	+0.0167
		+0.0118	+0.0118
1400	1600	+0.0161	+0.0179
		+0.0130	+0.0130
1600	1800	+0.0182	+0.0205
		+0.0146	+0.0146
1800	2000	+0.0194	+0.0217
		+0.0157	+0.0157

TOLERANCES FOR HOUSING BORE DIAMETERS

Table J.29 - Tolerances for Housing Bore Diameters

Units: inch

Housing Bore Diameter (mm)		Bearing O.D. Tolerance	Housing Bore Tolerance						
over	incl.	ABEC1	G7	H6	H7	H8	J6	J7	JS6
10	18	+0	+0.0009	+0.0004	+0.0007	+0.0011	+0.0002	+0.0004	±0.0002
		-0.0003	+0.0002	+0	+0	+0	-0.0002	-0.0003	
18	30	+0	+0.0011	+0.0005	+0.0008	+0.0013	+0.0003	+0.0005	±0.0003
		-0.0004	+0.0003	+0	+0	+0	-0.0002	-0.0004	
30	50	+0	+0.0013	+0.0006	+0.0010	+0.0015	+0.0004	+0.0006	±0.0003
		-0.0004	+0.0004	+0	+0	+0	-0.0002	-0.0004	
50	80	+0	+0.0016	+0.0007	+0.0012	+0.0018	+0.0005	+0.0007	±0.0004
		-0.0005	+0.0004	+0	+0	+0	-0.0002	-0.0005	
80	120	+0	+0.0019	+0.0009	+0.0014	+0.0021	+0.0006	+0.0009	±0.0004
		-0.0006	+0.0005	+0	+0	+0	-0.0002	-0.0005	
120	150	+0	+0.0021	+0.0010	+0.0016	+0.0025	+0.0007	+0.0010	±0.0005
		-0.0007	+0.0006	+0	+0	+0	-0.0003	-0.0006	
150	180	+0	+0.0021	+0.0010	+0.0016	+0.0025	+0.0007	+0.0010	±0.0005
		-0.0010	+0.0006	+0	+0	+0	-0.0003	-0.0006	
180	250	+0	+0.0024	+0.0011	+0.0018	+0.0028	+0.0009	+0.0012	±0.0006
		-0.0012	+0.0006	+0	+0	+0	-0.0003	-0.0006	
250	315	+0	+0.0027	+0.0013	+0.0020	+0.0032	+0.0010	+0.0014	±0.0006
		-0.0014	+0.0007	+0	+0	+0	-0.0003	-0.0006	
315	400	+0	+0.0030	+0.0014	+0.0022	+0.0035	+0.0011	+0.0015	±0.0007
		-0.0016	+0.0007	+0	+0	+0	-0.0003	-0.0007	
400	500	+0	+0.0033	+0.0016	+0.0025	+0.0038	+0.0013	+0.0017	±0.0008
		-0.0018	+0.0008	+0	+0	+0	-0.0003	-0.0008	
500	630	+0	+0.0036	+0.0017	+0.0028	+0.0043	–	–	±0.0009
		-0.0020	+0.0009	+0	+0	+0	–	–	
630	800	+0	+0.0041	+0.0020	+0.0031	+0.0049	–	–	±0.0010
		-0.0030	+0.0009	+0	+0	+0	–	–	
800	1000	+0	+0.0046	+0.0022	+0.0035	+0.0055	–	–	±0.0011
		-0.0039	+0.0010	+0	+0	+0	–	–	
1000	1250	+0	+0.0052	+0.0026	+0.0041	+0.0065	–	–	±0.0013
		-0.0049	+0.0011	+0	+0	+0	–	–	
1250	1600	+0	+0.0061	+0.0031	+0.0049	+0.0077	–	–	±0.0015
		-0.0063	+0.0012	+0	+0	+0	–	–	
1600	2000	+0	+0.0072	+0.0036	+0.0059	+0.0091	–	–	±0.0018
		-0.0079	+0.0013	+0	+0	+0	–	–	
2000	2500	+0	+0.0082	+0.0043	+0.0069	+0.0110	–	–	±0.0022
		-0.0098	+0.0013	+0	+0	+0	–	–	

Directions: The housing bore tolerances are determined by adding the top number in the tolerance group to the housing bore size and adding the bottom number to the housing bore size. This provides the maximum and minimum housing bore, respectively.

For example:

Housing bore = 1.2598″
Application = Electric Motor (Recommended Housing fit H7)
Housing Bore Tolerance (max) = 1.2598″ + 0.0007″ = 1.2605″
Housing Bore Tolerance (min) = 1.2598″ + 0″ = 1.2598″

Table J.29 - Tolerances for Housing Bore Diameters (continued)

Units: inch

Housing Bore Diameter (mm)		Housing Bore Tolerance							
over	incl.	JS7	K6	K7	M6	M7	N6	N7	P7
10	18	±0.0004	+0.0001	+0.0002	-0.0002	+0	-0.0004	-0.0002	-0.0004
			-0.0004	-0.0005	-0.0006	-0.0007	-0.0008	-0.0009	-0.0011
18	30	±0.0004	+0.0001	+0.0002	-0.0002	+0	-0.0004	-0.0003	-0.0006
			-0.0004	-0.0006	-0.0007	-0.0008	-0.0009	-0.0011	-0.0014
30	50	±0.0005	+0.0001	+0.0003	-0.0002	+0	-0.0005	-0.0003	-0.0007
			-0.0005	-0.0007	-0.0008	-0.001	-0.0011	-0.0013	-0.0017
50	80	±0.0006	+0.0002	+0.0004	-0.0002	+0	-0.0006	-0.0004	-0.0008
			-0.0006	-0.0008	-0.0009	-0.0012	-0.0013	-0.0015	-0.0020
80	120	±0.0007	+0.0002	+0.0004	-0.0002	+0	-0.0006	-0.0004	-0.0009
			-0.0007	-0.0010	-0.0011	-0.0014	-0.0015	-0.0018	-0.0023
120	150	±0.0008	+0.0002	+0.0005	-0.0003	+0	-0.0008	-0.0005	-0.0011
			-0.0008	-0.0011	-0.0013	-0.0016	-0.0018	-0.0020	-0.0027
150	180	±0.0008	+0.0002	+0.0005	-0.0003	+0	-0.0008	-0.0005	-0.0011
			-0.0008	-0.0011	-0.0013	-0.0016	-0.0018	-0.0020	-0.0027
180	250	±0.0009	+0.0002	+0.0005	-0.0003	+0	-0.0009	-0.0006	-0.0013
			-0.0009	-0.0013	-0.0015	-0.0018	-0.0020	-0.0024	-0.0031
250	315	±0.0010	+0.0002	+0.0006	-0.0004	+0	-0.0010	-0.0006	-0.0014
			-0.0011	-0.0014	-0.0016	-0.0020	-0.0022	-0.0026	-0.0035
315	400	±0.0011	+0.0003	+0.0007	-0.0004	+0	-0.0010	-0.0006	-0.0016
			-0.0011	-0.0016	-0.0018	-0.0022	-0.0024	-0.0029	-0.0039
400	500	±0.0012	+0.0003	+0.0007	-0.0004	+0	-0.0011	-0.0007	-0.0018
			-0.0013	-0.0018	-0.0020	-0.0025	-0.0026	-0.0031	-0.0043
500	630	±0.0014	+0	+0	-0.0010	-0.0010	-0.0017	-0.0017	-0.0031
			-0.0017	-0.0028	-0.0028	-0.0038	-0.0035	-0.0045	-0.0058
630	800	±0.0016	+0	+0	-0.0012	-0.0012	-0.0020	-0.0020	-0.0035
			-0.002	-0.0031	-0.0031	-0.0043	-0.0039	-0.0051	-0.0066
800	1000	±0.0018	+0	+0	-0.0013	-0.0013	-0.0022	-0.0022	-0.0039
			-0.0022	-0.0035	-0.0035	-0.0049	-0.0044	-0.0057	-0.0075
1000	1250	±0.0020	+0	+0	-0.0016	-0.0016	-0.0026	-0.0026	-0.0047
			-0.0026	-0.0041	-0.0042	-0.0057	-0.0052	-0.0067	-0.0089
1250	1600	±0.0024	+0	+0	-0.0019	-0.0019	-0.0031	-0.0031	-0.0055
			-0.0031	-0.0049	-0.0050	-0.0068	-0.0061	-0.0080	-0.0104
1600	2000	±0.0030	+0	+0	-0.0023	-0.0023	-0.0036	-0.0036	-0.0067
			-0.0036	-0.0059	-0.0059	-0.0082	-0.0072	-0.0095	-0.0126
2000	2500	±0.0034	+0	+0	-0.0027	-0.0027	-0.0043	-0.0043	-0.0077
			-0.0043	-0.0069	-0.0070	-0.0096	-0.0087	-0.0112	-0.0146

FIT - WHY IT'S IMPORTANT

When a bearing's inner ring is fitted to the shaft with only slight interference, slipping or "creep" may occur. Creep may also occur between the outer ring and housing.

When creep occurs the fitted surfaces become abraded which causes excessive wear and may cause considerable damage to the shaft or housing. In addition, abrasive metal particles resulting from creep may enter the interior of the bearing and cause abnormal heating and vibration.

It is important to prevent creep by having sufficient interference to firmly secure the bearing ring to either the shaft or housing.

In specific applications, fits can be made without interference. For example, it is usually not necessary to provide fit interference for rings subjected only to stationary loads. In other applications, loose fits may be used to accommodate certain operating conditions or to facilitate bearing mounting and dismounting. In these cases, lubrication or other methods need to be considered to prevent damage to the fitting surfaces due to creep.

Table J.30 - Loading Conditions and Fit

Load Application	Bearing Operation		Loading Conditions	Fit	
	Inner Ring	Outer Ring		Inner Ring and Shaft	Outer Ring and Shaft
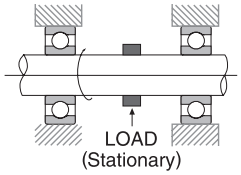	Rotating	Stationary	Rotating Inner Ring Load Stationary Outer Ring Load	Tight Fit	Loose Fit
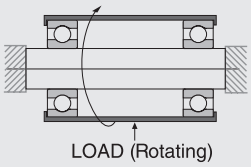	Stationary	Rotating	Rotating Inner Ring Load Stationary Outer Ring Load	Tight Fit	Loose Fit
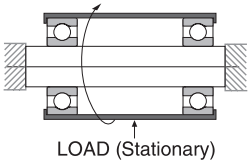	Stationary	Rotating	Rotating Outer Ring Load Stationary Inner Ring Load	Loose Fit	Tight Fit
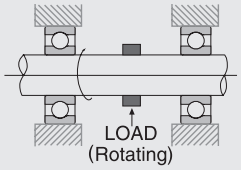	Rotating	Stationary	Rotating Outer Ring Load Stationary Inner Ring Load	Loose Fit	Tight Fit
Direction of Load Indeterminate	Rotating or Stationary	Rotating or Stationary	Direction of Load Indeterminate	Tight Fit	Tight Fit

LOAD CONDITIONS AND FIT

Proper fit may be selected from Table J.30 on page J-23 based on the load and operating conditions.

MAGNITUDE OF LOAD AND INTERFERENCE

Under load, a slight amount of deflection or deformation of the bearing rings will occur. This reduces the interference fit. For this reason, heavier loaded bearings require a heavier initial interference fit. The required interference can be calculated using the following equations:

$$Ød_f = 0.08\sqrt{\frac{d}{B}}\,F_r \times 10^{-3}$$

light and normal loads

$$Ød_e \geq 0.02\,\frac{F_r}{B} \times 10^{-3}$$

when $F_r > .20\ C_{or}$

Where
- $Ød_f$: Interference decrease of inner ring (mm)
- $Ød_e$: Effective interference (mm)
- d: Bearing bore diameter (mm)
- B: Inner ing width (mm)
- F_r: Radial load applied to bearing (N)

INTERFERENCE VARIATION DUE TO TEMPERATURE DIFFERENCE BETWEEN BEARING AND SHAFT OR HOUSING

Interference decreases when bearing temperature increases during operation. If the temperature difference between the interior of the bearing and the surrounding parts of the housing is **ØT**(°C), then the temperature difference between the fitted surfaces of the shaft and the inner ring is estimated to be about (0.1~0.15)T. Decrease of inner ring interference due to this difference may be calculated from the following equation:

$$Ød_T = (0.10 \sim 0.15)\ ØT \cdot \alpha \cdot d = 0.0015ØT \cdot d \times 10^{-3}$$

Where
- $Ød_T$ Decrease of interference of inner ring due to temperature increase (mm)
- $ØT$ Temperature difference between bearing and surrounding parts
- α Coefficient of linear expansion of bearing steel (12.5 x 10-6(1/°C))
- d Bore diameter

Table J.31 - Fits of Radial Bearings with Solid Steel Shafts

Load Conditions		Examples	Shaft Diameter (mm)			Tolerance of Shaft
			Ball Bearings	Cylindrical or Tapered Roller Bearings	Spherical Roller Bearings	
		Radial Bearings with Cylindrical Bores				
Rotating Outer Ring Load	Easy axial displacement of inner ring on shaft desirable	Wheels on Stationary Axles	All Shaft Diameters			**g6**
	Easy axial displacement of outer ring on shaft unnecessary	Tension Pulleys, Rope Sheaves	All Shaft Diameters			**h6**
Rotating Inner Ring Load or Direction of Load Indeterminate	Light Load (<0.06C_r[1])	Electrical Appliances, Pumps, Blowers, Transport Vehicles, Precision Machinery, Machine Tools	<18	–	–	**js5**
			18 to 100	<40	–	**js6 (j6)**
			100 to 200	40 to 140	–	**k6**
			–	140 to 200	–	**m6**
	Normal Loads (0.06 to 0.13 C_r[1])	General Bearing Applications, Medium and Large Motors, Turbines, Pumps, Engine Main Bearings, Gears, Woodworking Machines	<18	–	–	**js5~6 (j5~6)**
			18 to 100	<40	<40	**k5 or 6**
			100 to 140	40 to 100	40 to 65	**m5 or 6**
			140 to 200	100 to 140	65 to 100	**m6**
			200 to 280	140 to 200	100 to 140	**n6**
			–	200 to 400	140 to 280	**p6**
			–	–	280 to 500	**r6**
			–	–	>500	**r7**
	Heavy Loads (> 0.13 C_r[1])	Railway Axle Boxes, Industrial Vehicles, Traction Motors, Construction Equipment, Crushers	–	50 to 140	50 to 100	**n6**
			–	140 to 200	100 to 140	**p6**
			–	over 200	140 to 200	**r6**
			–	–	200 to 500	**r7**
Axial Loads Only		–	All Shaft Diameters			**js6 (j6)**
Radial Bearings with Tapered Bores and Sleeves (Contact NSK Engineering)						

Note: [1] C_r represents the basic load rating of the bearing.

Table J.32 - Fits of Thrust Bearings with Solid Steel Shafts

Load Conditions		Examples	Shaft Diameter (mm)	Tolerance of Shaft
Central Axial Load Only		Main Shafts of Lathes	All Shaft Diameters	**h6 or js6 (j6)**
Combined Radial and Axial Loads (Spherical Thrust Roller Bearings)	Stationary Inner Ring Load	Cone Crushers	All Shaft Diameters	**js6 (j6)**
	Rotating Inner Ring Load or Direction of Load Indeterminate	Paper Pulp Refiners, Plastic Extruders	<200	**k6**
			200 to 400	**m6**
			Over 400	**n6**

Table J.33 - Fits of Inch Design Tapered Roller Bearings with Shafts
(1) Bearings of Precision Classes 4 and 2

Units: μm

Operating Conditions		Nominal Bore Diameters d				Bore Diameter Tolerances △ ds		Shaft Diameter Tolerances		Remarks
		over		incl.		high	low	high	low	
		(mm)	1/25.4	(mm)	1/25.4					
Rotating Inner Ring Loads	Normal Loads	---		76.200	3.0000	+13	0	+ 38	+ 25	For bearings with d≤152.4 mm, clearance is usually larger than CN.
		76.200	3.0000	304.800	12.0000	+25	0	+ 64	+ 38	
		304.800	12.0000	609.600	24.0000	+51	0	+127	+ 76	
		609.600	24.0000	914.400	36.0000	+76	0	+190	+114	
	Heavy Loads Shock Loads High Speeds	---		76.200	3.0000	+13	0	+ 64	+ 38	In general, bearings with a clearance larger than CN are used. ※ means that the average interference is about 0.0005 d.
		76.200	3.0000	304.800	12.0000	+25	0	※		
		304.800	12.0000	609.600	24.0000	+51	0	※		
		609.600	24.0000	914.400	36.0000	+76	0	+381	+305	
Rotatiing Outer Ring Loads	Normal Loads without Shocks	---		76.200	3.0000	+13	0	+13	0	The inner ring cannot be displaced axially. When heavy or shock loads exist, the figures in the above (Rotating inner ring loads, heavy or shock loads) apply.
		76.200	3.0000	304.800	12.0000	+25	0	+25	0	
		304.800	12.0000	609.600	24.0000	+51	0	+51	0	
		609.600	24.0000	914.400	36.0000	+76	0	+76	0	
		---		76.200	3.0000	+13	0	0	-13	The inner ring can be displaced axially.
		76.200	3.0000	304.800	12.0000	+25	0	0	-25	
		304.800	12.0000	609.600	24.0000	+51	0	0	-51	
		609.600	24.0000	914.400	36.0000	+76	0	0	-76	

(2) Bearings of Precision Classes 3 and 0(1)

Units: μm

Operating Conditions		Nominal Bore Diameters d				Bore Diameter Tolerances △ ds		Shaft Diameter Tolerances		Remarks
		over		incl.		high	low	high	low	
		(mm)	1/25.4	(mm)	1/25.4					
Rotating Inner Ring Loads	Precision Machine-Tool Main Spindles	---		76.200	3.0000	+13	0	+ 30	+ 18	—
		76.200	3.0000	304.800	12.0000	+13	0	+ 30	+ 18	
		304.800	12.0000	609.600	24.0000	+25	0	+ 64	+ 38	
		609.600	24.0000	914.400	36.0000	+38	0	+102	+ 64	
	Heavy Loads Shock Loads High Speeds	---		76.200	3.0000	+13	0	—		A minimum interference of about 0.00025 d is used.
		76.200	3.0000	304.800	12.0000	+13	0	—		
		304.800	12.0000	609.600	24.0000	+25	0	—		
		609.600	24.0000	914.400	36.0000	+38	0	—		
Rotating Outer Ring Loads	Precision Machine-Tool Main Spindles	---		76.200	3.0000	+13	0	+ 30	+ 18	—
		76.200	3.0000	304.800	12.0000	+13	0	+ 30	+ 18	
		304.800	12.0000	609.600	24.0000	+25	0	+ 64	+ 38	
		609.600	24.0000	914.400	36.0000	+38	0	+102	+ 64	

Note: (1) For bearings with d greater than 304.8 mm, Class 0 does not exist.

Table J.34 - Fits of Radial Bearings with Housings

Load Conditions			Examples	Tolerances for Housing Bores
Solid Housings	Rotating Outer Ring Load	Heavy Loads on Bearing in Thin-Walled Housing or Heavy Shock Loads	Automotive Wheel Hubs (Roller Bearings), Crane Travelling Wheels	**P7**
		Normal or Heavy Loads	Automotive Wheel Hubs (Ball Bearings), Vibrating Screens	**N7**
		Light or Variable Loads	Conveyor Roller, Rope Sheaves, Tension Pulleys	**M7**
	Direction of Load Indeterminate	Heavy Shock Loads	Traction Motors	**M7**
		Normal or Heavy Loads	Pumps and Crankshaft Main Bearings	**K7**
Solid or Split Housings		Normal or Light Loads	Medium and Large Motors	**JS7 (J7)**
	Rotating Inner Ring Load	Loads of All Kinds	General Bearing Applications, Railway Axleboxes	**H7**
		Normal and Light Loads	Plummer Blocks	**H8**
		High Temperature Rise of Inner Ring Through Shaft	Paper Dryers	**G7**
Solid Housings		Accurate Running Desirable under Normal and Light Loads	Grinding Spindle Rear Ball Bearings, High Speed Centrifugal Compressor Free Bearings	**JS6 (J6)**
	Direction of Load Indeterminate		Grinding Spindle Front Ball Bearings, High Speed Centrifugal Compressor Fixed Bearings	**K6**
	Rotating Inner Ring Load	Accurate Running at High Rigidity Desirable under Variable Loads	Cylindrical Roller Bearings for Machine Tool Main Spindle	**M6 or N6**
		Minimum noise is required	Electrical Home Appliances	**H6**

Table J.35 - Fits of Thrust Bearings with Housings

Load Conditions			Remarks	Tolerances for Housing Bores
Axial Loads Only		Thrust Ball Bearings	General Purpose Application	**Clearance over 0.25mm**
			When Precision is Required	**H8**
		Spherical Thrust Roller Bearings	When Loads are Sustained by Other Bearings	**Outer ring has radial clearance**
Combined Radial and Axial Loads	Stationary Outer Ring Loads	Spherical Thrust Roller Bearings	-	**H7 or JS7 (J7)**
	Rotating Outer Ring Loads or Direction of Load Indeterminate		Normal Loads	**K7**
			Relatively Heavy Radial Loads	**M7**

Table J.36 - Fits of Inch Design Tapered Roller Bearings with Housings
(1) Bearings of Precision Classes 4 and 2

Units: μm

Operating Conditions		Nominal Outside Diameters D over (mm)	Nominal Outside Diameters D over 1/25.4	Nominal Outside Diameters D incl. (mm)	Nominal Outside Diameters D incl. 1/25.4	Outside Diameter Tolerances △ Ds high	Outside Diameter Tolerances △ Ds low	Housing Bore Diameter Tolerances high	Housing Bore Diameter Tolerances low	Remarks
Rotating Inner Ring Loads	Used either on free-end or fixed-end.	----		76.200	3.0000	+25	0	+ 76	+ 51	The outer ring can be easily displaced axially.
		76.200	3.0000	127.000	5.0000	+25	0	+ 76	+ 51	
		127.000	5.0000	304.800	12.0000	+25	0	+ 76	+ 51	
		304.800	12.0000	609.600	24.0000	+51	0	+152	+102	
		609.600	24.0000	914.400	36.0000	+76	0	+229	+152	
	The outer ring position can be adjusted axially.	----		76.200	3.0000	+25	0	+ 25	0	The outer ring can be displaced axially.
		76.200	3.0000	127.000	5.0000	+25	0	+ 25	0	
		127.000	5.0000	304.800	12.0000	+25	0	+ 51	0	
		304.800	12.0000	609.600	24.0000	+51	0	+ 76	+ 25	
		609.600	24.0000	914.400	36.0000	+76	0	+127	+ 51	
	The outer ring position cannot be adjusted axially.	----		76.200	3.0000	+25	0	- 13	- 38	Generally, the outer ring is fixed axially.
		76.200	3.0000	127.000	5.0000	+25	0	- 25	- 51	
		127.000	5.0000	304.800	12.0000	+25	0	- 25	- 51	
		304.800	12.0000	609.600	24.0000	+51	0	- 25	- 76	
		609.600	24.0000	914.400	36.0000	+76	0	- 25	-102	
Rotating Outer Ring Loads	Normal Loads The outer ring position cannot be adjusted axially.	----		76.200	3.0000	+25	0	- 13	- 38	The outer ring is fixed axially.
		76.200	3.0000	127.000	5.0000	+25	0	- 25	- 51	
		127.000	5.0000	304.800	12.0000	+25	0	- 25	- 51	
		304.800	12.0000	609.600	24.0000	+51	0	- 25	- 76	
		609.600	24.0000	914.400	36.0000	+76	0	- 25	-102	

(2) Bearings of Precision Classes 3 and 0[(1)]

Units: μm

Operating Conditions		Nominal Outside Diameters D over (mm)	Nominal Outside Diameters D over 1/25.4	Nominal Outside Diameters D incl. (mm)	Nominal Outside Diameters D incl. 1/25.4	Outside Diameter Tolerances △ Ds high	Outside Diameter Tolerances △ Ds low	Housing Bore Diameter Tolerances high	Housing Bore Diameter Tolerances low	Remarks
Rotating Inner Ring Loads	Used on free-end	----		152.400	6.0000	+13	0	+ 38	+ 25	The outer ring can be easily displaced axially.
		152.400	6.0000	304.800	12.0000	+13	0	+ 38	+ 25	
		304.800	12.0000	609.600	24.0000	+25	0	+ 64	+ 38	
		609.600	24.0000	914.400	36.0000	+38	0	+ 89	+ 51	
	Used on fixed-end	----		152.400	6.0000	+13	0	+ 25	+ 13	The outer ring can be displaced axially.
		152.400	6.0000	304.800	12.0000	+13	0	+ 25	+ 13	
		304.800	12.0000	609.600	24.0000	+25	0	+ 51	+ 25	
		609.600	24.0000	914.400	36.0000	+38	0	+ 76	+ 38	
	The outer ring position can be adjusted axially.	----		152.400	6.0000	+13	0	+ 13	0	Generally, the outer ring is fixed axially.
		152.400	6.0000	304.800	12.0000	+13	0	+ 25	0	
		304.800	12.0000	609.600	24.0000	+25	0	+ 25	0	
		609.600	24.0000	914.400	36.0000	+38	0	+ 38	0	
	The outer ring position cannot be adjusted axially.	----		152.400	6.0000	+13	0	0	- 13	The outer ring is fixed axially.
		152.400	6.0000	304.800	12.0000	+13	0	0	- 25	
		304.800	12.0000	609.600	24.0000	+25	0	0	- 25	
		609.600	24.0000	914.400	36.0000	+38	0	0	- 38	
Rotating Outer Ring Loads	Normal Loads The outer ring position cannot be adjusted axially.	----		76.200	3.0000	+13	0	- 13	- 25	The outer ring is fixed axially.
		76.200	3.0000	152.400	6.0000	+13	0	- 13	- 25	
		152.400	6.0000	304.800	12.0000	+13	0	- 13	- 38	
		304.800	12.0000	609.600	24.0000	+25	0	- 13	- 38	
		609.600	24.0000	914.400	36.0000	+38	0	- 13	- 51	

Note: (1) For bearings with D greater than 304.8 mm, Class 0 does not exist.

CHANGES IN RADIAL INTERNAL CLEARANCE

DECREASE IN RADIAL INTERNAL CLEARANCE DUE TO FIT

When the inner or outer ring is tight-fitted to the shaft or the housing, a decrease of radial internal clearance is caused by the expansion or contraction of the bearing rings. The decrease varies according to the bearing type, bearing size and shape, and design of the shaft or housing. The amount of decrease normally ranges from 70 to 90% of the interference.

The internal clearance after mounting, $\varnothing f$, is obtained by subtracting the interference decrease from the initial internal clearance.

TEMPERATURE EFFECTS ON RADIAL INTERNAL CLEARANCE

Under normal operation, the radial internal clearance of a bearing will decrease because of the temperature differences between the inner and outer rings. Typically, the temperatures of the inner ring and the rolling elements are higher than that of the outer ring by 8 to 15°F. When the shaft is heated or when the housing is cooled, the difference between the inner and outer rings is even larger.

The amount of decrease due to thermal expansion can be calculated from the following equations:

$$\delta_t = \alpha \triangle_t D_e$$

Where δ_t : Internal clearance decrease (inch) due to temperature
α: Coefficient of linear expansion of bearing steel (12.5×10^{-6}) (1/°C)
$\triangle_t$: Temperature difference between inner & outer rings (°C)
D_e : Outer ring raceway diameter (inch)

For Ball Bearings: $D_e = \frac{1}{5}(4D + d)$ **For Roller Bearings:** $D_e = \frac{1}{4}(3D + d)$

Where **D** : Bearing outside diameter (inch)
d : Bearing bore diameter (inch)

EFFECTIVE CLEARANCE

The effective, or operating, clearance $\varnothing$ is obtained by subtracting δ_t from the internal clearance after mounting $\varnothing f$. Theoretically, the longest life of a bearing can be expected when the effective clearance is slightly negative. However, it is difficult to achieve this condition and excessive negative clearance will shorten bearing life. Therefore, a clearance of zero or a slightly positive value is preferable.

Angular contact ball bearings or tapered roller bearings normally require the user to set the internal clearance at mounting. The user should check the proper orientation of these bearings by checking the original bearings or the service manual for the machine. A check should also be made for the recommended set clearance. This can be obtained from the service manual, the machine manufacturer, or the bearing manufacturer.

PRELOADED BEARINGS

TYPES AND FEATURES

Rolling bearings usually retain some internal clearance while in operation. However, in some cases it is desirable to provide a negative clearance. This is called "preloading." Preloading can be used to decrease bearing deflection and provide greater bearing rigidity. However, it may also increase power consumption and reduce bearing life.

A preload is usually given to those types of bearings in which the axial clearance can be adjusted in mounting -- for example, angular contact ball bearings and tapered roller bearings. Usually preloaded bearings are mounted face to face or back to back to form a duplex bearing set.

WHY PRELOAD?

Typical reasons and applications for preloading bearings are:

- To maintain bearings in an exact position in both the radial and axial directions and to maintain the running accuracy of the shaft... for example, the main shaft of machine tools and instruments.
- To increase bearing rigidity. This is often needed on the main shaft of machine tools or the pinion shaft of automobile differentials.
- To minimize noise due to axial vibration and resonance...for example, in high speed or high acceleration applications of angular contact ball bearings and thrust ball bearings.
- To prevent sliding due to the gyratory movement of rolling elements...for example, in high speed or high acceleration applications of angular contact ball bearings and thrust ball bearings.
- To maintain the rolling elements in their proper position with the bearing rings...for example, on thrust ball bearings and spherical roller thrust bearings mounted on a horizontal shaft.

HOW TO PRELOAD DUPLEX BEARINGS

There are two basic methods for preloading duplex bearings -- preloading by position and preloading by constant pressure:

POSITION PRELOAD

Position preload is achieved by positioning two axially opposed bearings while maintaining their relative positions in operation. This is usually done by one of the following methods:

- Installing a duplex bearing set with previously adjusted stand-out dimensions and axial clearance.
- Using a spacer or shim with proper dimensions to obtain the required spacing and preload. See Figure J.1.
- Using bolts or nuts to allow adjustment of the axial clearance. In this case the starting friction torque should be measured to verify the proper preload.

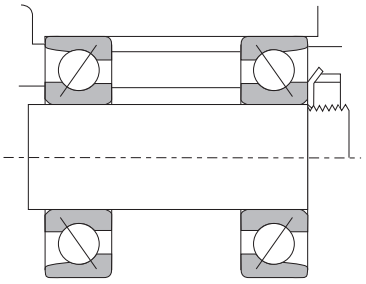

Figure J.1 - Example of Position Preload

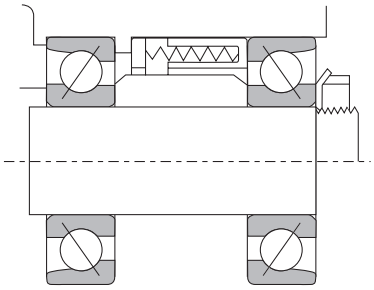

Figure J.2 - Example of Constant Pressure Preload

CONSTANT PRESSURE PRELOAD

Constant pressure preload is achieved by using a coil or leaf spring to impose a constant preload. Even if the relative position of the bearings changes during operation, the magnitude of the preload remains relatively constant. See Figure J.2.

SELECTING PRELOADING METHOD AND THE AMOUNT OF PRELOAD USE

COMPARISON OF PRELOADING METHODS

A comparison of rigidity using different preloading methods is shown in the chart below.

Figure J.3 - Comparsion of Preloading Methods

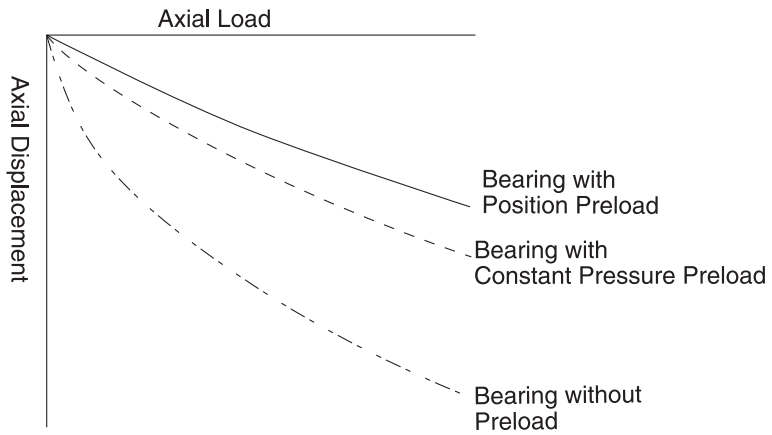

Position preloading is generally preferred for increasing rigidity. Constant pressure preload is more suitable for high speed applications, prevention of axial vibration, and for use with thrust bearings on horizontal shafts. Position preload and constant pressure preload each offer specific advantages:

- When equal preloads are imposed, the position preload provides greater bearing rigidity. The deflection due to external loads is less for bearings with a position preload.
- In position preloading the level of preload varies depending on such factors as a difference in axial expansion due to a temperature difference between the inner and outer rings and deflection due to load.
- In constant pressure preloading it is possible to minimize any change in the preload because the variation of the spring load with shaft expansion and contraction is negligible.

HOW MUCH PRELOAD TO USE?

If the preload is larger than necessary, abnormal heat generation, increased frictional torque and reduced fatigue life may occur. The amount of the preload should be determined considering the operating conditions, the purpose of the preload, and the type of bearing to be preloaded.

Preload of Duplex Angular Contact Ball Bearings — The average preloads for duplex angular contact ball bearings (contact angle of 15°) with precision better than P5 class are listed in the tables on the following page. These bearings are used on the main shafts of machine tools.

The recommended fits between the shaft and inner ring, and between the housing and outer ring are listed in Table J.32 on page J-25 thru Table J.35 on page J-26.

For housing fits, the lower limit of the fit range should be selected for fixed-end bearings and the upper limit for free-end bearings.

As a general rule, an extra light or light preload should be selected for spindles of grinders and a medium preload should be selected for the main shafts of high speed lathes and milling machines.

Table J.37 - Preloads for Duplex Angular Contact Ball Bearings

Units: N

Bearing Number	Preload			
	Extra Light Preload EL	Light Preload L	Medium Preload M	Heavy Preload H
7000 C	12	25	49	100
7001 C	12	25	59	120
7002 C	14	29	69	150
7003 C	14	29	69	150
7004 C	24	49	120	250
7005 C	29	59	150	290
7006 C	39	78	200	390
7007 C	60	120	250	490
7008 C	60	120	290	590
7009 C	75	150	340	690
7010 C	75	150	390	780
7011 C	100	200	490	980
7012 C	100	200	540	1080
7013 C	125	250	540	1080
7014 C	145	290	740	1470
7015 C	145	290	780	1570
7016 C	195	390	980	1960
7017 C	195	390	980	1960
7018 C	245	490	1180	2350
7019 C	270	540	1180	2350
7020 C	270	540	1270	2550

Table J.38 - Duplex Bearing of Series 72

Units: N

Bearing Number	Preload			
	Extra Light Preload EL	Light Preload L	Medium Preload M	Heavy Preload H
7200 C	14	29	69	150
7201 C	19	39	100	200
7202 C	19	39	100	200
7203 C	24	49	150	290
7204 C	34	69	200	390
7205 C	39	78	200	390
7206 C	60	120	290	590
7207 C	75	150	390	780
7208 C	100	200	490	980
7209 C	125	250	540	1080
7210 C	125	250	590	1180
7211 C	145	290	780	1570
7212 C	195	390	930	1860
7213 C	220	440	1080	2160
7214 C	245	490	1180	2350
7215 C	270	540	1230	2450
7216 C	295	590	1370	2750
7217 C	345	690	1670	3330
7218 C	390	780	1860	3730
7219 C	440	880	2060	4120
7220 C	490	980	2350	4710

Table J.39 - Recommended Fits for Precision Class Duplex Angular Contact Ball Bearings with Preload

Nominal Bore Diameter d (mm)		Target Shaft Interference (inch)	Nominal Outside Diameter D (mm)		Target Housing Clearance (inch)	
over	incl.		over	incl.		
–	18	0 - 0.0001	–	18	–	–
18	30	0 - 0.0001	18	30	+.0001	+.0002
30	50	0 - 0.0001	30	50	+.0001	+.0002
50	80	0 - 0.0001	50	80	+.0001	+.0003
80	120	0 - 0.0002	80	120	+.0001	+.0004
120	150	–	120	150	+.0002	+.0005
150	180	–	150	180	+.0002	+.0005
180	250	–	180	250	+.0002	+.0006

Table J.40 - Duplex Bearings of Series 79

Units: N

Bearing Number	Preload			
	Extra Light Preload EL	Light Preload L	Medium Preload M	Heavy Preload H
7900 C	7	15	29	59
7901 C	8.6	15	39	78
7902 C	12	25	49	100
790 C3	12	25	59	120
7904 C	19	39	78	150
7905 C	19	39	100	200
7906 C	24	49	100	200
7907 C	34	69	150	290
7808 C	39	78	200	390
7909 C	50	100	200	390
7910 C	50	100	250	490
7911 C	100	200	490	980
7912 C	60	120	290	590
7913 C	75	150	340	690
7914 C	100	200	490	980
7915 C	100	200	490	980
7916 C	100	200	490	980
7917 C	145	290	640	1270
7918 C	145	290	740	1470
7919 C	145	290	780	1570
7920 C	195	390	880	1770

PRELOAD OF THRUST BALL BEARINGS

When the balls in thrust ball bearings rotate at relatively high speeds, sliding due to the gyratory movement of the balls may occur. The larger of the two values obtained from the equations below should be selected as the minimum axial load in order to prevent such sliding.

$$F_{a,min} = \frac{C_{oa}}{100} \left(\frac{n}{N_{max}}\right)^2$$

Where: $F_{a,min}$: Minimum axial load, N
C_{oa}: Basic static load rating, N
n: Rotational speed, RPM
N_{max}: Limiting speed (oil lubrication), RPM

PRELOAD OF SPHERICAL ROLLER THRUST BEARINGS

When spherical roller thrust bearings are used a preload is necessary to keep the rollers in proper position against the outer ring raceway. The minimum axial load F_a,min necessary to do this is: $F_{a,min} = \left(\frac{C_{oa}}{1000}\right)$

LUBRICATING GREASE

Grease is a semi-solid lubricant of a base oil and a thickener. Other ingredients are sometimes added to impart special properties to the base.

The main types and general properties of grease are shown in Table J.42 on page J-33. It should be noted that different brands of the same type of grease may have different properties.

Base Oil – Mineral oil or synthetic oils such as silicon or diester oil, are commonly used as the base oil for grease. The lubricating properties of grease are dependent on the characteristics of its base oil. The viscosity of the base oil is an important consideration when selecting grease. Usually grease made with a low viscosity base oil is more suitable for high speeds and low temperatures while grease made with high viscosity base oils is more suited for high temperatures and heavy loads. The thickener also influences the lubricating properties of grease, therefore selection criteria for grease are not the same as for lubricating oil.

Thickener – Several types of metallic soaps, inorganic compounds such as silica gel and bentonite, and heat resisting organic thickeners such as polyurea and flouric compounds are used as thickeners for grease. The water resistance properties of grease depend on the type of thickener. Sodium soap grease (or compound grease containing sodium soap) emulsifies when exposed to water or high humidity and therefore cannot be used where moisture is prevalent. Lithium soap grease, on the other hand, is recommended where moisture is present because of its resistance to wash off.

For applications where the operating temperature exceeds the limitation of common multi-purpose grease, greases having complex bases or non-soap bases are recommended. The grease used should also have a synthetic oil to withstand rapid deterioration at high temperatures. If the grease used in a high temperature application uses a mineral oil, it should be replenished frequently as deterioration of the oil will be accelerated at high temperatures.

Additives – Grease often contains a variety of additives such as antioxidants, corrosion inhibitors, and extreme pressure additives to give it special properties. Extreme pressure additives are recommended for use in heavy load applications. For long use without replenishment, an antioxidant should be added.

Consistency – Consistency indicates the "softness" of the grease. The following table shows the relationship between consistency and working conditions.

Table J.41 - Lubricant Consistency

	Consistency Number (Given by the National Lubricating Grease Institute (NLGI) Scale)				
	0	**1**	**2**	**3**	**4**
Consistency (1) (1/10mm)	385~355	340~310	295~265	250~220	205~175
Working Condition	For centralized oiling. When false brinelling is liable to occur.	For centralized oiling. When fretting is liable to occur. For low temperature.	For general use. For sealed bearings.	For high temperature. For general use. For sealed bearings.	For high temperature. For grease seals.

Note: (1) Consistency: Depth into grease attained by a cone when pressed with a specified weight, indicated in units of 1/10 mm. The larger the value, the softer the grease.

Mixing Different Types of Grease – In general, grease of different types must not be mixed. Mixing grease with different types of thickeners may destroy the composition and physical properties of the grease. Even if the thickeners are of the same type, possible differences in the additives may cause detrimental effects.

Table J.42 - Grease Properties

Property (1)									
Popular Name →	Lithium Grease			Sodium Grease (Fiber Grease)	Calcium Grease (Cup Grease)	Mixed Base Grease	Complex Grease	Non-Soap Base Grease	
Thickener →	Li Soap			Na Soap	Ca Soap	Na + Ca Soap, Li + Ca Soap, etc.	Ca Complex, A1 Complex, etc.	Silica Gel, Bentonite, Carbon Black, Polyurea, Flouric Compounds, Heat Resistant Organic Compound, etc.	
Base Oil →	Mineral Oil	Diester Oil	Silicone Oil	Mineral Oil	Mineral Oil	Mineral Oil	Mineral Oil	Mineral Oil	Synthetic Oil
Dropping Point, ℃	170~190	170~195	200~210	170~210	70~90	160~190	180~300	230	240~
Working Temp., ℃	-20~110	-50~130	-50~160	-20~130	-20~60	-20~80	-20~130	-10~130	~250
Working Speed, % (2)	70	100	60	70	40	70	70	70	40~100
Mechanical Stability	Good	Good	Good	Good	Poor	Good	Good	Good	Good
Pressure Resistance	Fair	Fair	Poor	Fair	Poor	Fair to Good	Fair to Good	Fair	Fair
Water Resistance	Good	Good	Good	Poor	Good	Poor for Na Soap Grease	Good	Good	Good
Rust Prevention	Good	Good	Poor	Poor to Good	Good	Fair to Good	Fair to Good	Fair to Good	Fair to Good
Remarks	General purpose lubricant.	Good low temperature and torque characteristics. Often used for small motor and instrument bearings.	Mainly for high temperature applications. Unsuitable for bearings under high speed or heavy load conditions or for sliding contact areas (roller bearings).	Long and short fiber types available. Long fiber grease is not suitable for high speeds or for sliding contact areas (roller bearings).	Not suitable for high temp. and heavy loads. Extreme pressure grease containing high viscosity oil and extreme pressure additive (Pb soap, etc.) is available.	Often used for roller bearings and large ball bearings.	Suitable for extreme pressures. Mechanically stable.	Medium and high temperature lubricant.	Recommended for special environments with very high and low temperatures, acids, alkalis, radioactivity, and exposure to flames.

Note: (1) The grease properties shown here can vary between different brands.
(2) the values listed are percentages of the limiting speeds given in the bearing tables.

LUBRICATING OIL

Lubricating oil used for bearings is usually a highly refined mineral or synthetic oil which has a high film strength and superior oxidation and corrosion resistance. When selecting an oil, the viscosity of the operating conditions is very important. If the viscosity is too low, a proper oil film is not formed and abnormal wear and seizure may occur. On the other hand, if the viscosity is too high, excessive viscous resistance may cause heating or a large power loss. In general, low viscosity oils should be used at high speeds. Higher viscosity oils should be used for heavy loads or for the larger bearings. The following table shows the generally recommended viscosity for certain bearing types.

Table J.43 - Recommended Viscosity by Bearing Type

Bearing Types	Proper Viscosity at the Operating Temperature
Ball Bearings and Cylindrical Roller Bearings	Higher than 13 cSt
Tapered Roller Bearings and Spherical Roller Bearings	Higher than 20 cSt
Spherical Roller Thrust Bearings	Higher than 32 cSt

Figure J.4 - Temperature - Viscosity Chart

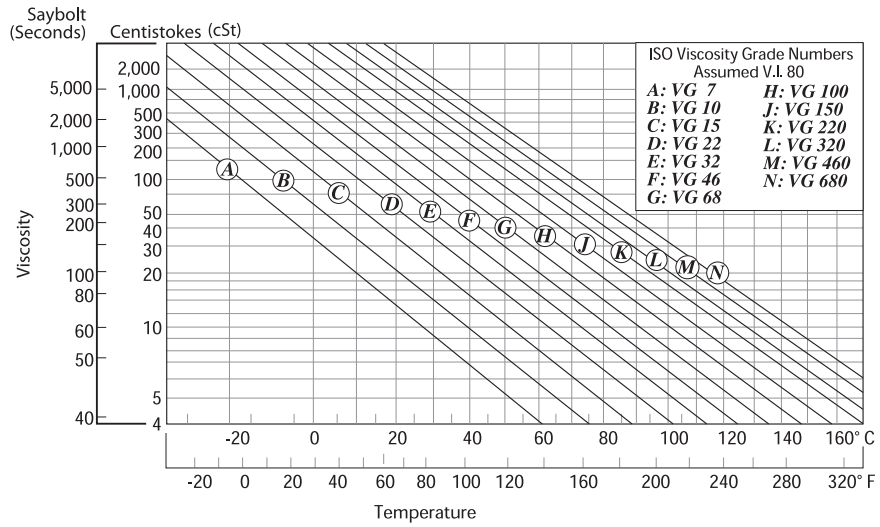

This chart shows the relationship between temperature and viscosity for use in selection of the proper lubricating oil.

Oil Replacement Interval – The oil replacement interval depends on the operating conditions and oil quantity. In those cases where the operating temperature is less than 120°F and the environmental conditions are good, oil should be replaced approximately once a year. However, where the oil temperature is about 212°F the oil must be changed at least once every three months.

In dirty environmental conditions, or if moisture or foreign material is mixed in the oil, the replacement interval must be shortened.

Mixing different brands of lubricating oil should be avoided.

BEARING LUBRICATION

LUBRICATION - THE PURPOSE

Lubrication is needed to reduce friction and wear inside the bearing. Proper lubrication and procedures will allow the bearing to reach its expected life.

Primarily, lubrication serves the following purposes:

- Reduces Friction and Wear – Direct metallic contact between the bearing rings, rolling elements and cage is prevented by an oil film which reduces the friction and heat at the contact areas.
- Extends Bearing Life – The rolling fatigue life of bearings depends in a large part on the viscosity and film thickness of the lubricant. A proper film thickness prolongs the bearing fatigue life.
- Cooling – Circulating oil can be used to carry heat away from the bearing. A circulating system is normally used when excessive heat is generated by the bearing due to high speeds, high loads, or when heat from a source adjacent to the bearing can affect its operation. Oils deteriorate at high temperatures; therefore it is important to keep both the oil and the bearing cool.
- Other Purposes – Proper lubrication also helps to prevent foreign material from entering the bearings, and protects against corrosion or rusting.

SELECTING THE CORRECT LUBRICATION METHOD

Lubrication can be accomplished by using either oil or grease. The most satisfactory bearing performance will be achieved by selecting the method most suitable for a specific application. This of course will also depend on the conditions under which the bearing will operate.

Oil lubrication is superior in lubricating efficiency, however, grease lubrication allows a simpler structure around the bearings. The following table compares oil and grease lubrication.

Table J.44 - Grease vs. Oil Lubrication

Operating Factor	Grease Lubrication	Oil Lubrication
Housing Structure and Sealing Method	Simple	May be complex. Careful maintenance required.
Speed	Limiting speed is 65 % to 80% that of oil lubrication	High limiting speed
Cooling Effect	Poor	Heat transfer is possible using forced oil circulation lubrication
Fluidity	Poor	Good
Full Lubrication Replacement	Sometimes difficult	Easy
Removal of Foreign Matter	Removal of particles from grease is impossible	Easy
External Contamination Due to Leakage	Surroundings seldom contaminated by leakage	Often leaks without proper countermeasures. Not suitable if external contamination must be avoided.

GREASE LUBRICATION

GREASE QUANTITY

The quantity of grease to be packed in a housing depends on the housing design, rotational speeds of the bearings, characteristics of the grease selected, and the ambient temperature conditions. These factors are critical to satisfactory performance.

In applications where the operating speed does not exceed one-half the rated limiting speed of the bearing, the housing should be packed one-half to two-thirds full. If the speed of the bearing exceeds one-half the limiting speed, the quantity of grease should be reduced to one-third to one-half full and periodic regreasing scheduled. When operating conditions are not severe, the original pack of grease should last a long time without replenishment. If the operating conditions become severe, it will be necessary to regrease periodically.

Care should be taken to avoid excessive greasing as this will cause bearings to overheat.

REPLACEMENT OF GREASE

Grease, once packed, usually need not be replenished for a long time; however, for severe operating conditions, grease should be frequently replenished or replaced. In such cases, the bearing housing should be designed to facilitate grease replenishment and replacement.

When replacement intervals are short, provide replenishment and discharge ports at appropriate positions so deteriorated grease is replaced by fresh grease. For example, the housing space on the grease supply side can be divided into several sections with partitions. The grease on the partitioned side gradually passes through the bearings and old grease forced from the bearing is discharged through a release valve. If a grease valve is not used, the space on the discharge side is made larger than the partitioned side so it can retain the old grease, which is removed periodically by removing the cover.

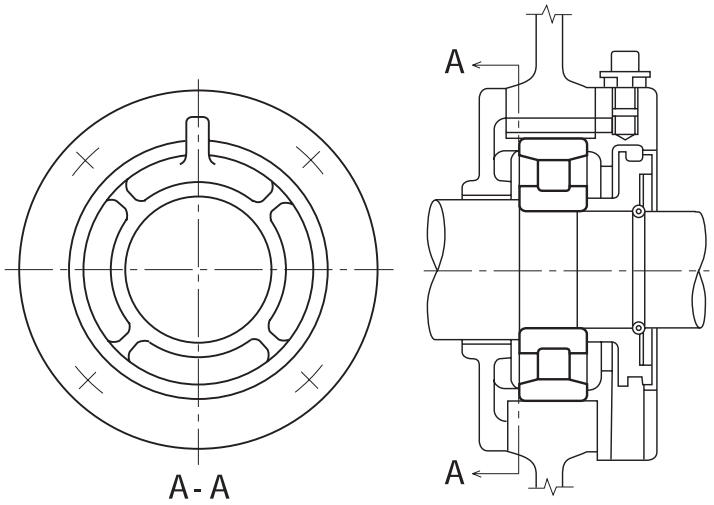

Figure J.5 - Combination of Partitioned Grease Reservoir and Grease Valve

REPLENISHMENT INTERVAL

Even if high-quality grease is used, there is deterioration of its properties with time; therefore, periodic replenishment is required. Figure J.6 shows the replenishment time intervals for various bearing types running at different speeds.

- Temperature

If the bearing temperature exceeds 70°C, the replenishment time internal must be reduced by half for every 15°C temperature rise of the bearings.

- Grease

In case of ball bearings especially, the replenishing time internal can be extended depending on used grease type. For example, high quality lithium soap-synthetic oil grease may extend about two times of replenishing time interval. If the temperature of the bearings is less than 70°C, the usage of lithium soap-mineral oil grease or lithium soap-synthetic oil grease is appropriate.

- Load

The replenishing time interval depends on the magnitude of the bearing load. If P/C exceeds 0.16, it is advisable to consult NSK.

Figure J.6 - Grease Replenishment Intervals

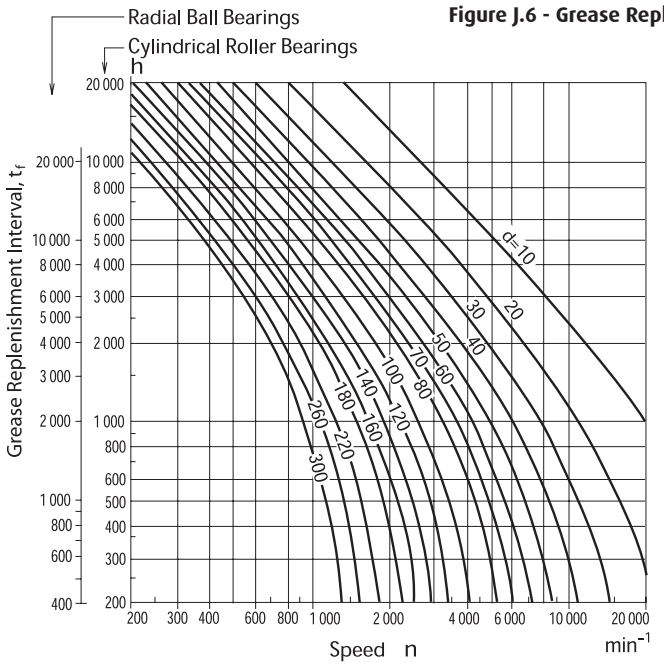

(1) Radial Ball Bearings, Cylindrical Roller Bearings

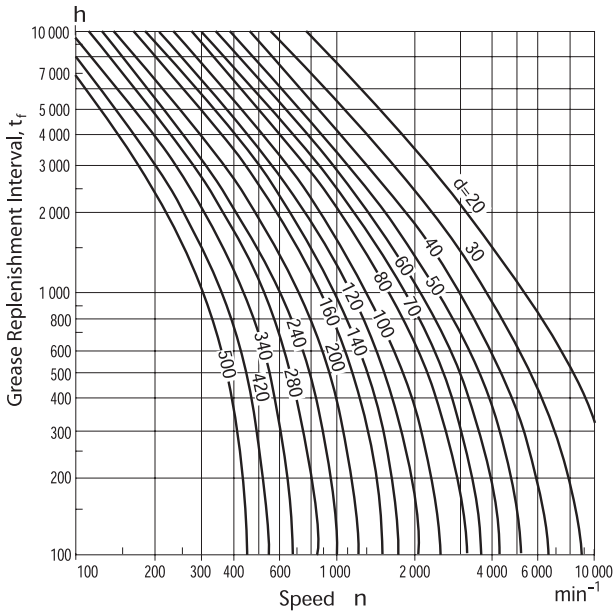

(2) Tapered Roller Bearings, Spherical Roller Bearings

(3) Load factor

P/C	0.06	0.1	0.13	0.16
Load factor	1.5	1	0.65	0.45

GREASE REPLENISHMENT

Frequent grease replenishment is required when operating conditions are severe such as in high ambient temperatures or where contaminants can enter bearing housings. Routine regreasing schedules should be established. In cases where extremely severe conditions exist or the bearings are in a remote area, the bearing housing should be designed to make replenishment and replacement as simple as possible. Automatic grease systems are available and should be used.

For normal operating conditions, it may be necessary to regrease the bearing periodically to replace any grease which has leaked from the housing and to eliminate any deteriorated grease.

OIL LUBRICATION

When the operating speed exceeds the grease limiting speed listed for the bearing, oil lubrication should be used. Several methods are available and are described below. The best method to use will depend on operating conditions.

Oil Bath Lubrication is a common method used where bearings are operating below the listed oil limiting speed. The static oil level should be set at the center of the lowest rolling element. An oil sight level gauge should be included in the system so that proper oil level can be quickly monitored.

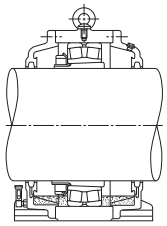

Figure J.7 - Oil Bath Lubrication

Drip Feed Lubrication is often used for small bearings operated at relatively high speeds. In the illustration, a visible oiler is used. The oil drip rate is controlled by a screw valve located at the top of the oil cup.

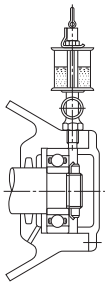

Figure J.8 - Drip Feed Lubrication

Splash Lubrication – In this lubricating method, oil is splashed onto the bearings by gears or by a simple rotating disc. This method is commonly used in automobile transmissions, differentials and gear boxes. The illustration shows splash lubrication used on a reduction gear.

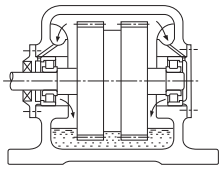

Figure J.9 - Splash Lubrication

Circulating System lubrication is commonly used for high speed operation and for bearings used at high temperatures. As shown in the illustration, oil from the supply pipe circulates through the bearings and exits to an external reservoir. After cooling in the reservoir it returns to the bearing through a pump and filter. In a circulating system, the oil outlet should be larger in diameter than the supply pipe so that an excessive amount of oil will not remain in the housing.

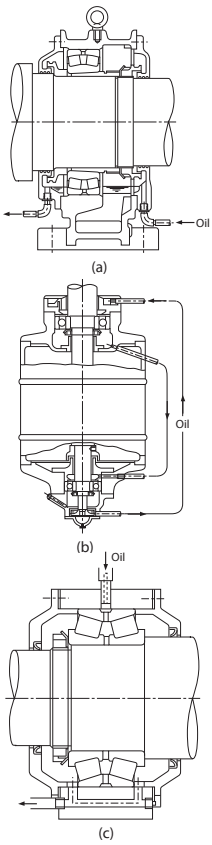

Figure J.10 - Circulation Lubrication

Jet Lubrication is often used for ultra-high speed bearings, such as the bearings in jet engines with a d_{mn} valve (d_m: pitch diameter of rolling element set in mm, n: rotational speed in min $^{-1)}$ exceeding one million. Lubrication oil is sprayed under pressure from one of more nozzles directly into the bearing.

Figure J.11 shows an example of ordinary jet lubrication. The lubricating oil is sprayed on the inner ring and cage guide face. In the case of high speed operation, the air surrounding the bearing rotates with it causing the oil jet to be deflected. The jetting speed of the oil from the nozzle should be more than 20% of the circumferential speed of the inner ring outer surface (which is also the guide face for the cage).

More uniform cooling and a better temperature distribution are achieved using more nozzles for a given amount of oil. It is desirable for the oil to be forcibly discharged so the agitating resistance of the lubricant can be reduced and the oil can effectively carry away the heat.

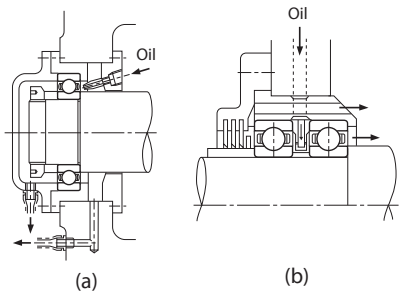

Figure J.11 - Jet Lubrication

Oil mist lubrication, also called oil fog lubrication, utilizes an oil mist sprayed into a bearing. This method has the following advantages:

(a) Because of the small quantity of oil required, the oil agitation resistance is small, and higher speeds are possible.
(b) Contamination of the vicinity around the bearing is slight because the oil leakage is small.
(c) It is relatively easy to continuously supply fresh oil; therefore, the bearing life is extended.

This lubricating method is used in bearings for the high speed spindles of machine tools, high speed pumps, roll necks of rolling mills, etc. For oil mist lubrication of large bearings, it is advisable to consult NSK.

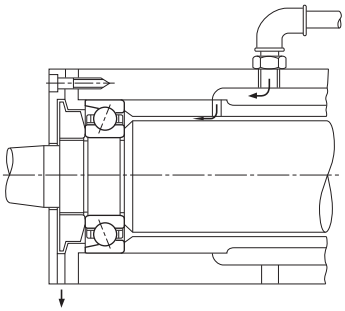

Figure J.12 - Oil Mist Lubrication

Using the oil/air lubricating method, a very small amount of oil is discharged intermittently by a constant-quantity piston into a pipe carrying a constant flow of compressed air. The oil flows along the wall of the pipe and approaches a constant flow rate.
The major advantages of oil/air lubrication are:

(a) Since the minimum necessary amount of oil is supplied, this method is suitable for high speeds because less heat is generated.
(b) Since the minimum necessary amount of oil is fed continuously, bearing temperature remains stable. Also, because of the small amount of oil, there is almost no atmospheric pollution.
(c) Since only fresh oil is fed to the bearings, oil deterioration need not be considered.
(d) Since compressed air is always fed to the bearings, the internal pressure is high, so dust, cutting fluid, etc. cannot enter.

For these reasons, this method is used in the main spindles of machine tools and other high-speed applications.

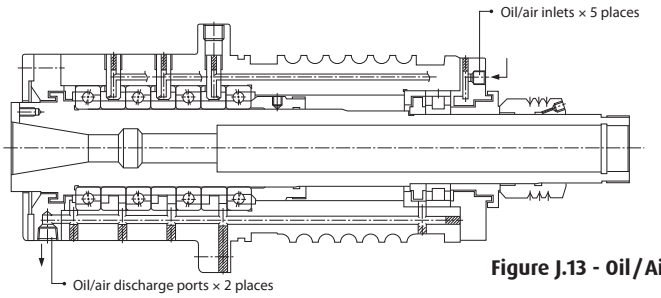

Figure J.13 - Oil / Air Lubrication

GREASE LIFE OF SEALED BALL BEARINGS

When grease is packed into single-row deep groove ball bearings, the grease life may be estimated using the equation below or Figure J.14.

General purpose grease [1]

$$\log t = 6.54 - 2.6\frac{n}{N_{max}} - (0.025 - 0.012\frac{n}{N_{max}})/T$$

Wide range grease [2]

$$\log t = 6.12 - 1.4\frac{n}{N_{max}} - (0.018 - 0.006\frac{n}{N_{max}})/T$$

Where:

- **t:** Average grease life (h)
- **n:** Speed (min^{-1})
- **N_{max}:** Limiting speed with grease lubrication (min^{-1}) (values for ZZ and VV types listed in the bearing tables)
- **T:** Operating temperature ^0C

Equations above and Figure J.14 apply under the following conditions:

(a) Speed, n

$$0.25 \le \frac{n}{N_{max}} \le 1$$

When $\frac{n}{N_{max}} < 0.25$, assume $\frac{n}{N_{max}} = 0.25$

(b) Operating Temperature, T

For general purpose grease [1]

$70^0C \le T \le 110^0C$

For wide-range grease [2]

$70^0C \le T \le 130^0C$

When $T < 70^0C$ assume $T = 70^0C$

(c) Bearing Loads The bearing loads should be about 1/10 or less of the basic load rating C_r.

Notes:

(1) Mineral-oil base greases (e.g. lithium soap base grease) which are often used over a temperature range of around -10 to 110^0C.
(2) Synthetic-oil base greases are usable over a wide temperature range of around -40 to 130^0C.

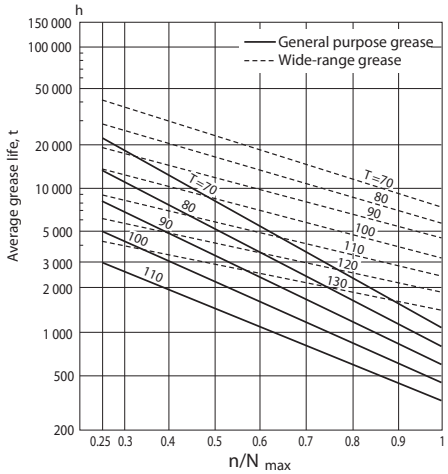

Figure J.14 - Grease Life of Sealed Ball Bearings

OIL REPLACEMENT INTERVALS

Oil replacement intervals depend on the operating conditions and oil quality.

In those cases where the operating temperature is less than 50°C, and the environmental conditions are good with little dust, the oil should be replaced approximately once a year. However, in cases where the oil temperature is about 100°C, the oil must be changes at least once every three months.

If moisture may enter or if foreign matter may be mixed in the oil, then the oil replacement interval must be shortened.

Mixing different brands of oil must be prevented for the same reason given previously for grease.

Table J.45 - Examples of Selecting Lubricating Oils

Operating Temperature	Speed	Light or Normal Load	Heavy or Shock Load
-30 to 0°C	Less than limiting speed	ISO VG 15, 22, 32 (refrigerating machine oil)	--
0 to 50°C	Less than 50% of limiting speed	ISO VG 32, 46, 68 (bearing oil, turbine oil)	ISO VG 46, 68, 100 (bearing oil, turbine oil)
	50 to 100% of limiting speed	ISO VG 15, 22, 32 (bearing oil, turbine oil)	ISO VG 22, 32, 46 (bearing oil, turbine oil)
	More than limiting speed	ISO VG 10, 15, 22 (bearing oil)	--
50 to 80°C	Less than 50% of limiting speed	ISO VG 100, 150, 220 (bearing oil)	ISO VG 150, 220, 320 (bearing oil)
	50 to 100% of limiting speed	ISO VG 46, 68, 100 (bearing oil, turbine oil)	ISO VG 68, 100, 150 (bearing oil, turbine oil)
	More than limiting speed	ISO VG 32, 46, 68 (bearing oil, turbine oil)	--
80 to 100°C	Less than 50% of limiting speed	ISO VG 320, 460 (bearing oil)	ISO VG 460, 680 (bearing oil, gear oil)
	50 to 100% of limiting speed	ISO VG 150, 220 (bearing oil)	ISO VG 220, 320 (bearing oil)
	More than limiting speed	ISO VG 68, 100 (bearing oil, turbine oil)	--

Remarks: 1. For the limiting speed, use the values listed in the bearing tables.
2. Refer to Refrigerating Machine Oils (JIS K 2211), Bearing Oils (JIS K 2239), Turbine Oils (JIS K 2213), and Gear Oils (JIS K 2219).
3. If the operating temperature is near the high end of the temperature range listed in the left column, select a high viscosity oil.
4. If the operating temperature is lower than -30°C or higher than 110°C, it is advisable to consult NSK.

HOW TO HANDLE BEARINGS AND MOUNTING - FACTORS TO CONSIDER

HOW TO HANDLE BEARINGS

Rolling bearings are high precision machine parts and need to be handled carefully. When installing or removing a bearing, correct procedures should be followed. Careless handling during mounting and removal could result in a serious accident, injuring people and damaging property.

Whether installing, removing, mounting, dismounting, replacing or inspecting, a few simple precautions must be followed:

Keep Bearings and Surroundings Clean!

Dust and dirt, even if invisible to the naked eye, can harm bearings. To prevent the entry of dust and dirt, keep bearings and their environment as clean as possible. Never remove a bearing from its package until you are ready to mount it.

Handle With Care!

Heavy shocks during handling may cause bearings to be scratched or otherwise damaged. Excessively strong impacts when mounting, dismounting or handling may cause brinelling, breaking or cracking.

Use Proper Tools!

Always use the proper equipment and tools to install or remove bearings. Avoid using general purpose tools such as hammers, screwdrivers, wrenches and pliers.

Protect Bearings From Corrosion!

Keep hands clean when handling bearings. Perspiration and other contaminants on the hands can cause corrosion on the bearings. Wear gloves, if possible. Apply oil or grease to non-sealed bearings immediately after installation for further protection.

MOUNTING - FACTORS TO CONSIDER

Bearings are very precise and their mounting requires careful attention. The following items must be considered:
- Cleaning related parts
- Dimensions and finish of related parts
- Mounting procedures
- Inspection after mounting
- Supply of lubricants

Prelubricated bearings and bearings lubricated with ordinary oil or grease should not be washed before installation. The preservative used on the bearing to protect it during storage is compatible with most common lubricants.

Bearings used for instruments or high speed applications, such as machine tool bearings, can be washed before installation to remove the anti-corrosion agent used in manufacturing. These bearings must be washed in clean, filtered oil and protected from corrosion until they are installed and lubricated. However with NSK's new packaging this is not always necessary. Consult NSK if you have questions.

Bearing mounting methods depend on bearing type and the type of fit. As bearings are usually used with rotating shafts, the inner rings require a tight fit. Bearings with cylindrical bores are usually mounted by pressing through the inner ring on the shafts (press fit) or heating them to expand their diameter (shrink fit). Bearings with tapered bores can be mounted directly on tapered shafts or on cylindrical shafts by using tapered sleeves.

Bearings are usually mounted in housings with a loose fit. However, if the outer ring has an interference fit, a press may be used. Bearings can be interference fitted by cooling before mounting, using dry ice. If this is done, a rust preventive treatment must be applied to the bearings because moisture in the air will condense on bearing surfaces.

MOUNTING BEARINGS WITH CYLINDRICAL BORES

Before Fitting Bearings:
- Leave preservative oil on bearing
- Compatible with most oils and greases
- Provides complete protection until run
- Only remove preservative oil when bearing is to be used with special oils or greases

Press Fits – Fitting with a press is widely used for small bearings. Before mounting, oil should be applied to the fitted shaft surface to make insertion smoother. A mounting tool is placed on the inner ring as shown in Figure J.15. The mounting tool must not be placed on the outer ring for press mounting, because this may damage the bearing. The bearing is slowly pressed onto the shaft until the side of the inner ring rests against the shoulder of the shaft.

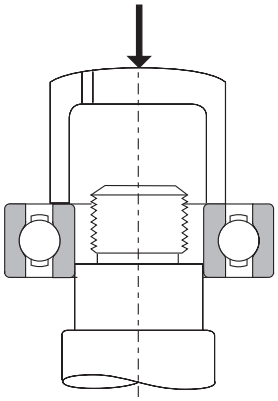

Figure J.15 - Press Mounting of Inner Ring

Using a hammer for mounting should only be done if pressing equipment is not available. Any time a hammer is used, a mounting tool must be placed on the inner ring. For tight interference fits or for medium and large bearings, a hammer should never be used.

When both the inner and outer rings of non-separable bearings, such as deep groove ball bearings, require a tight fit, a mounting tool should be placed on both rings and both rings fitted at the same time using a screw or hydraulic press. See Figure J.16.

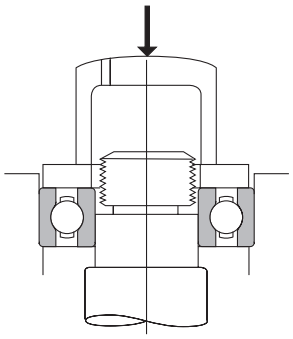

Figure J.16 - Simultaneous Press Mounting of Inner & Outer Ring

When mounting separable bearings, such as cylindrical roller bearings and tapered roller bearings, the inner and outer rings may be mounted separately.

Shrink Fits – Shrink fitting is often used to avoid the large force involved in press fitting large bearings. This method eliminates the need to impose excessive force on the bearings. For shrink fitting, the bearings are first heated in oil, or in an induction heater, to expand them, then mounted and allowed to cool.

This amount of expansion of the inner ring for various temperature differences and bearing sizes are shown in Figure J.17.

A few precautions to be considered when making shrink fits:
- Do not heat bearings to more than 248°F.
- Put bearings on a wire netting or suspend them in the oil tank to prevent them from touching the tank bottom.
- Heat bearings to a temperature 36°F to 54°F higher than the lowest temperature required for mounting, because the inner ring will cool a little during mounting.

After mounting, the bearings will shrink in the axial direction as well as the radial direction while cooling. Therefore, while mounting, press the bearing firmly against the shaft shoulder to avoid excessive clearance between the bearing and the shoulder.

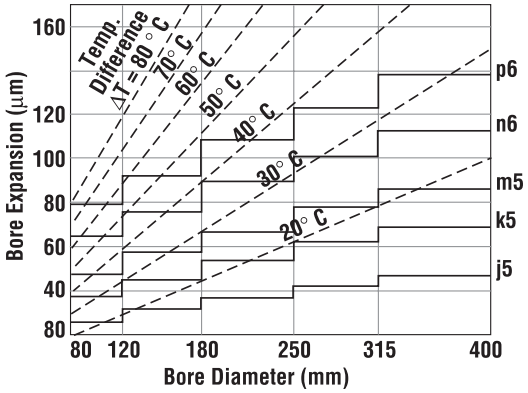

Figure J.17 - Temperature & Expansion of Inner Ring

MOUNTING BEARINGS WITH TAPERED BORES

Bearings with tapered bores can be mounted on tapered shafts directly or on cylindrical shafts by using tapered adapters or withdrawal sleeves.

Large spherical bearings are often mounted using hydraulic pressure. Figure J.18 shows two different hydraulic mounting methods. One method is a sleeve with a hydraulic nut. The other method uses a sleeve with pressurized oil. Holes drilled in the sleeve are used to feed oil under pressure to the bearing seat. As the bearing expands radially, the sleeve is inserted axially with adjusting bolts.

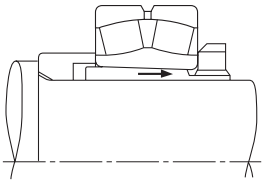

Mounting with Adapter

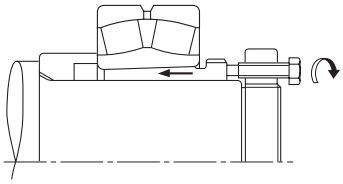

Mounting with Withdrawal Sleeve

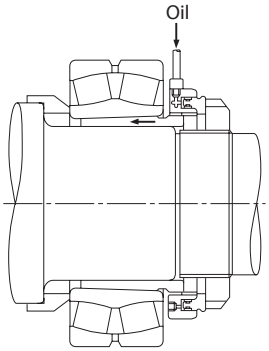

Mounting with Hydraulic Nut

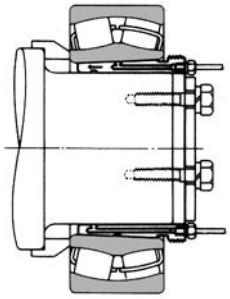

Mounting with Special Sleeve and Pressurized Oil

Figure J.18 - Mounting Bearing with Tapered Bores

The internal clearance of a tapered bore bearing varies with the tightness of the interference fit. It is necessary to check the clearance often as the bearing is being mounted. The bearing should be pressed until the reduction of radial clearance is within the range shown in Table J.46 on page J-45.

Table J.46 - Reduction of Radial Clearance for Spherical Roller Bearings with Tapered Bores

Units: inch

Nominal Bore Diameter (mm)		Radial Internal Clearance (Inch)						Reduction in Radial Clearance		Axial Displacement*				Minimum Permissible Residual Clearance after Mounting
		CN		C3		C4				Taper 1:12		Taper 1:30		
from	to (incl.)	min	max	min	max	min	max	min	max	min	max	min	max	CN
31	40	0.0014	0.0020	0.0020	0.0026	0.0026	0.0033	0.0010	0.0012	0.016	0.018	-	-	0.0004
41	50	0.0018	0.0024	0.0024	0.0031	0.0031	0.0039	0.0012	0.0014	0.018	0.022	-	-	0.0006
51	65	0.0022	0.0030	0.0030	0.0037	0.0037	0.0047	0.0012	0.0014	0.018	0.022	-	-	0.0010
66	80	0.0028	0.0037	0.0037	0.0047	0.0047	0.0059	0.0016	0.0018	0.024	0.028	-	-	0.0012
81	100	0.0031	0.0043	0.0043	0.0055	0.0055	0.0071	0.0018	0.0022	0.028	0.034	0.069	0.085	0.0014
101	120	0.0039	0.0053	0.0053	0.0067	0.0067	0.0087	0.0020	0.0024	0.030	0.035	0.075	0.089	0.0018
121	140	0.0047	0.0063	0.0063	0.0079	0.0079	0.0102	0.0024	0.0028	0.035	0.043	0.089	0.108	0.0022
141	160	0.0051	0.0071	0.0071	0.0091	0.0091	0.0118	0.0026	0.0031	0.039	0.051	0.098	0.128	0.0024
161	180	0.0055	0.0079	0.0079	0.0102	0.0102	0.0134	0.0028	0.0035	0.043	0.055	0.108	0.138	0.0028
181	200	0.0063	0.0087	0.0087	0.0114	0.0114	0.0146	0.0031	0.0039	0.051	0.063	0.128	0.157	0.0028
201	225	0.0071	0.0098	0.0098	0.0126	0.0126	0.0161	0.0035	0.0043	0.055	0.067	0.138	0.167	0.0031
226	250	0.0079	0.0106	0.0106	0.0138	0.0138	0.0177	0.0039	0.0047	0.063	0.075	0.157	0.187	0.0035
251	280	0.0087	0.0118	0.0118	0.0154	0.0154	0.0193	0.0043	0.0055	0.067	0.087	0.167	0.217	0.0039
281	315	0.0094	0.0130	0.0130	0.0169	0.0169	0.0213	0.0047	0.0059	0.075	0.095	0.187	0.236	0.0043
316	355	0.0106	0.0142	0.0142	0.0185	0.0185	0.0232	0.0055	0.0067	0.087	0.106	0.217	0.266	0.0047
356	400	0.0118	0.0157	0.0157	0.0205	0.0205	0.0256	0.0059	0.0075	0.095	0.118	0.236	0.295	0.0051
401	450	0.0130	0.0173	0.0173	0.0224	0.0224	0.0283	0.0067	0.0083	0.106	0.130	0.266	0.325	0.0055
451	500	0.0146	0.0193	0.0193	0.0248	0.0248	0.0311	0.0075	0.0094	0.118	0.146	0.295	0.364	0.0063
501	560	0.0161	0.0213	0.0213	0.0268	0.0268	0.0343	0.0083	0.0106	0.134	0.169	0.335	0.433	0.0067
561	630	0.0181	0.0236	0.0236	0.0299	0.0299	0.0386	0.0091	0.0118	0.146	0.189	0.364	0.472	0.0079
631	710	0.0201	0.0264	0.0264	0.0335	0.0335	0.0429	0.0102	0.0130	0.165	0.209	0.413	0.512	0.0087
711	800	0.0224	0.0295	0.0295	0.0378	0.0378	0.0480	0.0110	0.0146	0.177	0.232	0.453	0.591	0.0094
801	900	0.0252	0.0331	0.0331	0.0421	0.0421	0.0539	0.0122	0.0161	0.197	0.260	0.492	0.650	0.0110
901	1000	0.0280	0.0366	0.0366	0.0469	0.0469	0.0598	0.0134	0.0181	0.217	0.291	0.551	0.728	0.0122

*Axial displacement values apply only to solid steel shafts or hollow steel shafts where the bore is equal to or less than one-half of the outside diameter. If the material is other than steel, or if thin wall journals are used, please consult NSK.

1:12 Taper applies to Series 213, 222, 223, 230, 231, 232, 233, 238 and 239.
1:30 Taper applies to Series 240, 241 and 242.
For Pe less than 0.13Cr, use the lower half of the reduction range. For heavier loads or Pe greater than 0.13Cr, carburized or TL inner rings should be specified and the upper half of the reduction range can be used.

Radial internal clearance can be measured during mounting using a feeler gauge or other appropriate gauges. In this process, the clearances for both rows of rollers must be measured simultaneously and the two values kept roughly the same by adjusting the relative position of the outer and inner rings. This is shown in Fig. J.19. The average of the two measurements taken for both rows may be used as the residual internal clearance.

In large bearings (over 200mm), the outer ring may deform slightly into an elliptical shape due to its own weight. In this case, for best results, measurements should be taken at locations **a**, **b**, and **c** (see Fig. J.20) and entered into the following equation:

radial clearance = (**a** + **b** + **c**)/2

This method is used where the bearing is supported by its inner ring (radial clearance c at bottom). When a self-aligning ball bearing is mounted on a shaft adapter, sufficient clearance for easy alignment of the outer ring must be allowed.

For Radial Clearance Reduction example, please see page D-4.

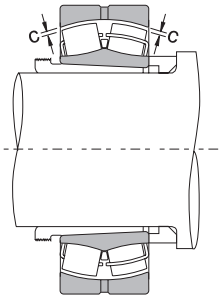

Figure J.19

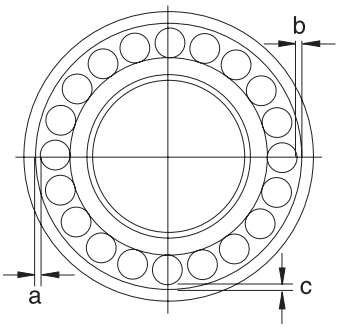

Figure J.20

MOUNTING OF SELF-ALIGNING BALL BEARINGS ON AN ADAPTER SLEEVE

Axial Drive-Up Method

1. Before mounting, smear the thread and the side face of the nut with a molybdenum disulphide paste or similar lubricant.
2. Smear the shaft and outside diameter of sleeve with a light oil.
3. Open the sleeve slightly by inserting and twisting a screw driver into the slit in the sleeve and position the sleeve on the shaft.
4. Slide bearing, lockwasher and locknut onto sleeve and tighten nut with a 'C' spanner until all slackness is removed.
5. Measure distance from end tapered sleeve to the face of locknut or to the face of the inner ring and note the dimension.
6. From the chart note the required "axial drive up" and tighten the locknut until the bearing has moved the required distance up the taper of the sleeve indicated by the reduction or increase in the measured distance originally noted.
7. A self-aligning ball bearing with normal clearance when adjusted correctly should rotate freely but should have some resistance to swiveling.
8. Align one tab on the lock washer with a slot in the locknut and bend it into the slot, if no tabs line up with the slots slightly tighten the locknut until one lines up. Never back off the nut to line up the tab with the slot.

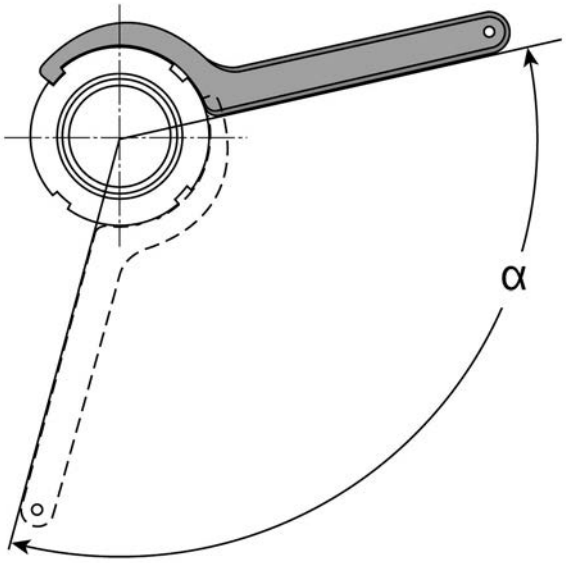

Figure J.21 - Mounting a Self-Aligning Ball Bearing on an Adapter Sleeve

MOUNTING OF SELF-ALIGNING BALL BEARINGS ON AN ADAPTER SLEEVE

Tightening Angle Method

1. Before mounting, smear the thread and the side face of the nut with a molybdenum disulphide paste or similar lubricant.
2. Smear the shaft and outside diameter of sleeve with a light oil.
3. Open the sleeve slightly by inserting and twisting a screw driver into the slit in the sleeve and position the sleeve on the shaft.
4. Slide bearing, lockwasher and locknut onto sleeve and tighten nut with a 'C' spanner until all slackness is removed.
5. Tighten locknut through the required angle, taken from chart, and then reposition the 'C' spanner to 180° from its original position and give it a sharp tap with the hammer to straighten the bearing on its seating.
6. A self-aligning ball bearing with normal clearance when adjusted correctly should rotate freely but should have some resistance to swiveling.
7. Align one tab on the lock washer with a slot in the locknut and bend it into the slot, if no tabs line up with the slots, slightly tighten the locknut until one lines up. **Never back off the nut to line up the tab with the slot.**

Table J.47 - Mounting of Double Row Self-Aligning Ball Bearings with 1:12 Tapered Bores on to Adapter Sleeves

INCH LOCK NUTS

		CN Clearance								C3 Clearance							
		Axial Displacement (inch)				Angular Turn (degrees)				Axial Displacement (inch)				Angular Turn (degrees)			
Diameter (mm)	Inch Lock Nut PN	12xx	13xx	22xx	23xx	12xx	13xx	22xx	23xx	12xx	13xx	22xx	23xx	12xx	13xx	22xx	23xx
20	N04	0.007	0.007	0.006	0.006	75	80	70	70	0.011	0.012	0.011	0.011	120	135	120	120
25	N05	0.007	0.008	0.007	0.007	80	90	85	80	0.012	0.013	0.012	0.012	135	145	140	135
30	N06	0.007	0.007	0.007	0.007	45	45	45	40	0.012	0.013	0.012	0.011	75	80	75	70
35	N07	0.009	0.010	0.009	0.009	60	60	55	55	0.015	0.016	0.015	0.014	95	100	95	90
40	N08	0.009	0.009	0.009	0.009	55	60	55	55	0.015	0.016	0.015	0.014	95	100	95	90
45	N09	0.010	0.011	0.010	0.010	65	70	65	60	0.017	0.018	0.017	0.016	105	110	105	100
50	N10	0.010	0.010	0.010	0.009	65	65	65	60	0.016	0.017	0.016	0.016	100	110	100	100
55	N11	0.013	0.013	0.013	0.012	80	85	80	75	0.021	0.022	0.021	0.020	135	140	135	130
60	N12	0.013	0.013	0.013	0.012	80	85	80	75	0.021	0.022	0.020	0.020	135	145	130	125
65	N13	0.013	0.013	0.012	0.012	80	80	75	75	0.021	0.022	0.020	0.020	135	140	130	130
70	N14	0.017	0.017	0.017	0.016	105	110	105	100	0.025	0.027	0.025	0.025	160	170	160	160
75	AN15	0.017	0.017	0.016	0.016	70	70	65	65	0.025	0.026	0.025	0.024	105	110	105	105
80	AN16	0.017	0.017	0.016	0.016	70	70	65	65	0.025	0.026	0.025	0.024	105	110	105	105
85	AN17	0.020	0.021	0.020	0.019	85	90	85	80	0.031	0.033	0.031	0.031	135	140	130	130
90	AN18	0.020	0.020	0.020	0.019	85	85	85	80	0.031	0.033	0.031	0.030	130	140	130	130
95	AN19	0.020	0.020	0.019	0.019	85	85	80	75	0.031	0.032	0.030	0.030	135	135	130	125
100	AN20	0.020	0.020	0.019	0.019	85	85	80	75	0.031	0.032	0.030	0.030	130	135	125	125
105	AN21	0.024	0.024	0.023	0.023	105	105	100	95	0.039	0.039	0.037	0.037	165	170	155	155
110	AN22	0.024	0.025	0.023	0.023	100	105	95	95	0.038	0.041	0.037	0.037	160	175	155	160

METRIC LOCK NUTS

		CN Clearance								C3 Clearance							
		Axial Displacement (mm)				Angular Turn (degrees)				Axial Displacement (mm)				Angular Turn (degrees)			
Diameter (mm)	Metric Lock Nut PN	12xx	13xx	22xx	23xx	12xx	13xx	22xx	23xx	12xx	13xx	22xx	23xx	12xx	13xx	22xx	23xx
20	KM4	0.17	0.18	0.16	0.16	60	60	55	55	0.27	0.30	0.27	0.27	95	105	95	95
25	KM5	0.18	0.20	0.19	0.18	40	45	45	40	0.30	0.33	0.31	0.30	70	75	70	70
30	KM6	0.18	0.19	0.18	0.17	40	45	40	40	0.30	0.32	0.30	0.29	70	75	70	65
35	KM7	0.24	0.25	0.23	0.22	55	60	55	50	0.39	0.41	0.38	0.36	90	95	90	85
40	KM8	0.23	0.24	0.23	0.22	55	55	55	50	0.39	0.40	0.38	0.36	90	95	90	85
45	KM9	0.26	0.28	0.26	0.25	60	65	60	60	0.42	0.45	0.42	0.41	100	105	100	95
50	KM10	0.26	0.26	0.26	0.24	60	60	60	55	0.41	0.44	0.41	0.40	95	105	95	95
55	KM11	0.33	0.34	0.33	0.31	55	60	55	55	0.53	0.56	0.53	0.51	95	100	95	90
60	KM12	0.33	0.34	0.32	0.30	55	60	55	50	0.53	0.57	0.52	0.50	95	100	90	90
65	KM13	0.33	0.33	0.31	0.30	55	55	55	50	0.54	0.55	0.51	0.51	95	95	90	90
70	KM14	0.42	0.44	0.42	0.41	75	75	75	70	0.64	0.68	0.63	0.63	115	120	110	110
75	KM15	0.42	0.44	0.41	0.40	75	75	70	70	0.63	0.67	0.63	0.62	110	120	110	110
80	KM16	0.42	0.43	0.41	0.40	75	75	70	70	0.64	0.66	0.63	0.62	115	115	110	110
85	KM17	0.51	0.53	0.50	0.49	90	95	90	85	0.80	0.85	0.79	0.78	140	150	140	140
90	KM18	0.50	0.52	0.50	0.48	90	90	90	85	0.79	0.83	0.78	0.77	140	145	140	135
95	KM19	0.51	0.51	0.49	0.47	90	90	85	80	0.80	0.81	0.77	0.76	140	145	135	135
100	KM20	0.50	0.50	0.48	0.47	90	90	85	80	0.79	0.81	0.76	0.76	140	145	135	135
105	KM21	0.62	0.62	0.59	0.58	110	110	105	100	0.98	1.00	0.94	0.94	175	180	165	165
110	KM22	0.61	0.63	0.58	0.58	105	110	100	100	0.97	1.03	0.93	0.95	170	185	165	170

INSPECTING AND TROUBLESHOOTING

After mounting has been completed, a running test should be conducted to determine that the bearing has been mounted properly.

Small machines may be manually operated to assure that they rotate smoothly. Items to be checked include sticking due to foreign matter, visible flaws, uneven torque, and excessive torque caused by inadequate clearance, mounting error or seal friction.

Large machines which cannot be operated manually, may be started with no load, then the power immediately cut off to allow the machine to coast to a stop. There should be no abnormal vibration, noise or contact between rotating parts. Normal powered operation may be started after this examination. Powered operation should be started slowly, without load, and the operation should be observed until it is determined that no abnormalities exist. Items to be checked during the test operation include abnormal noise, excessive rise of bearing temperature, leakage and discoloration of lubricants. Abnormal noise conditions are indicated by a loud metallic sound or other irregular noise. Possible causes of noise may include incorrect lubrication, poor alignment of the shaft and housing, and foreign matter in the bearing.

Bearing temperature may generally be estimated by the temperature of the outside surface of the housing, but it is more desirable to directly measure the temperature of the outer ring using oil holes for access. Bearing temperature should rise gradually to the steady state level within one to two hours after operation. If the bearing or mountings are improper, bearing temperature may increase rapidly and become abnormally high. Possible causes may include an excessive amount of lubricant, insufficient clearance, incorrect mounting, or excessive friction of the seals. In the case of high speed operation, an incorrect selection of bearing type or lubricating method may also cause an abnormal temperature rise.

Possible causes and countermeasures for operating irregularities are shown in the table below.

Table J.48 - Causes and Countermeasures for Operating Irregularities

Irregularities		Possible Causes	Countermeasures
Noise	Loud Metallic Sound	Abnormal Load	Correction of fit, internal clearance, preload, position of housing shoulder, etc.
		Incorrect mounting	Correction of alignment of shaft and housing, accuracy of mounting method
		Insufficient or improper lubricant	Replenish lubricant or select proper lubricant
		Squeaking noise	Replacement by low-noise bearings, selection of small clearance bearings
		Sliding of balls	Adjustment of preload, selection of small clearance bearings, or adoption of softer grease
		Contact of rotating parts	Correction of labyrinth seal, etc.
	Loud Regular Sound	Flaws, corrosion, or scratches on the raceways	Replacement of bearing, cleaning, improvement of seals, and usage of clean lubricant
		Brinelling	Replacement of bearing and careful handling
		Flaking on the raceways	Replacement of bearing
	Irregular Sound	Excessive clearance	Correction of fit and clearance and correction of preload
		Penetration by foreign particles	Replacement of bearing, cleaning, improvement of seals, and relubrication using clean lubricant
		Flaws or flaking on the ball surfaces	Replacement of bearing
		Excessive amount of lubricant	Reduce amount of lubricant, select stiffer grease
Abnormal Temperature Rise		Insufficient or improper lubricant	Replenish lubricant or select proper lubricant
		Abnormal load	Correction of fit, internal clearance, preload, position of housing shoulder
		Incorrect mounting	Correction of alignment of shaft and housing, accuracy of mounting, or mounting method
		Creep of fitted surfaces, excessive seal friction	Correction of seals, replacement of bearing, correction of fit or mounting
Vibration		Brinelling	Replacement of bearings and careful handling
		Flaking	Replacement of bearing
		Incorrect mounting	Correction of squareness between shaft and housing shoulder or side of spacer
		Penetration by foreign particles	Replacement of bearing, cleaning, correction of seals
Leakage or Discoloration of Lubricant		Too much lubrication	Reduce amount of lubricant, select stiffer grease. Replace bearing or lubricant
		Penetration by foreign particles or abrasion chips	Clean housing and adjacent parts

HOW TO DISMOUNT BEARINGS

It may be necessary to remove bearings for periodic inspection or for other reasons. If the removed bearing is to be used again, it should be dismounted as carefully as when it was mounted. If the bearing has a tight fit, removal may be difficult. Dismounting procedures and the sequence of removal should be studied carefully before beginning the job.

DISMOUNTING OF OUTER RINGS

Housings are not normally supplied with facilities to allow easy bearing removal. However, if it is necessary to periodically remove the bearing for inspection or replacement, special features can be incorporated to ease removal. One method is to provide tapped holes, in a minimum of three places equally spaced as illustrated in Figure J.22. Larger bearings will require more holes. By placing bolts in the holes and tightening evenly, the bearing will be forced out of the housing.

Another method is to provide slots in the housing shoulder as shown here. This allows the use of a press to allow safe removal of the bearing.

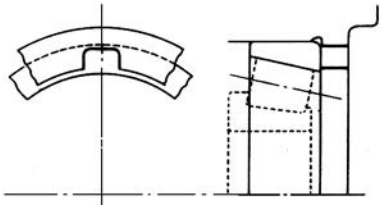

DISMOUNTING OF BEARINGS WITH CYLINDRICAL BORES

If the mounting design allows space to press out the inner ring, this is an easy and fast method. In this method, the withdrawal force should be imposed only on the inner ring. When it is not possible to use a press, bearing pullers like those shown in Figure J.22 are often used. The claws of these tools must fully engage the face of the inner ring, therefore it may be necessary to cut grooves in the shoulder to accommodate the tools.

The oil injection method is usually used for the withdrawal of large bearings. Withdrawal is achieved easily by means of oil pressure applied through holes in the shaft. In the case of extra wide bearings, the oil injection method is often used along with bearing pullers.

Induction heating is used to remove the inner rings of rollneck type, four row cylindrical roller bearings. The inner rings are expanded by brief local heating and then withdrawn.

DISMOUNTING OF BEARINGS WITH TAPERED BORES

When dismounting relatively small bearings with adapter sleeves, the inner ring is held by a backing ring fastened to the shaft and the nut is loosened several turns. This is followed by hammering on the sleeve using a suitable tool. See Figure J.22. It may be possible to dismount a withdrawal sleeve by tightening the removal nut. If this procedure is difficult, it may be possible to drill and tap bolt holes in the nut and withdraw the sleeve by tightening the bolts. The two methods for removal of the sleeve are illustrated in Figure J.22.

Large bearings with tapered bores may be withdrawn easily using oil pressure. Figure J.22. illustrates the removal of a bearing by forcing oil under pressure through a hole and groove in a tapered shaft to expand the inner ring. When this method is used, the bearing may suddenly move axially when interference is relieved, so a stop nut is recommended for protection. Figure J.22. also shows a withdrawal using a hydraulic nut.

Figure J.22 - Bearing Removal

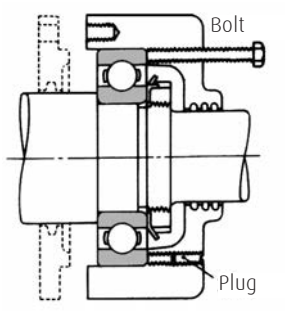

Removal of Outer Ring with Dismounting Bolts

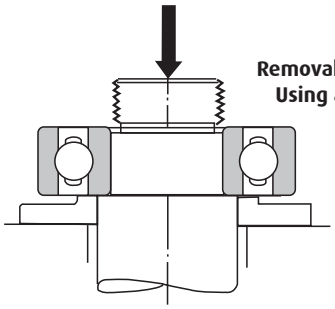

Removal of Inner Using a Press

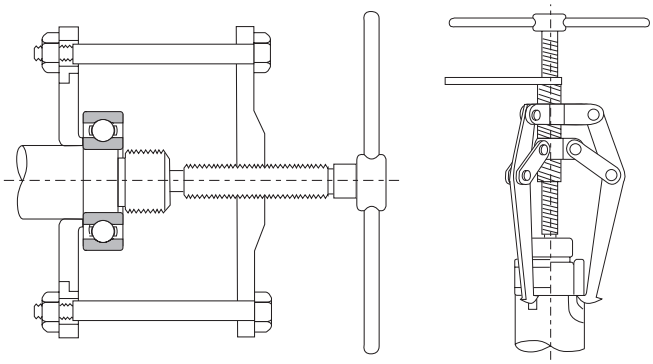

Removal of Inner Ring with Withdrawal Tools

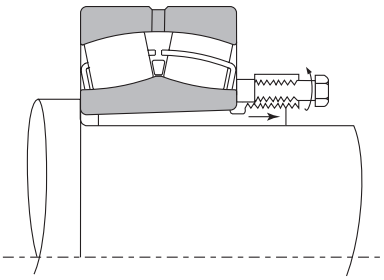

Removal of Withdrawal Sleeve with Withdrawal Nut

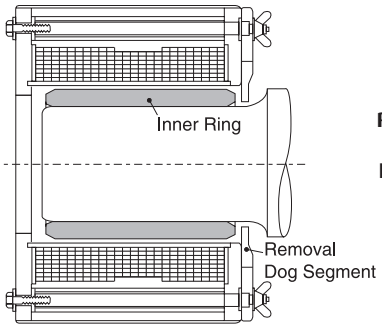

Removal of Inner Ring Using an Induction Heater

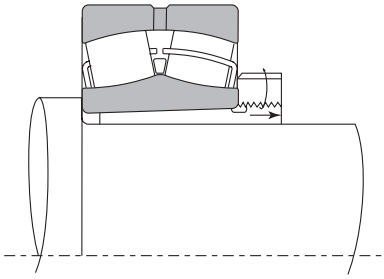

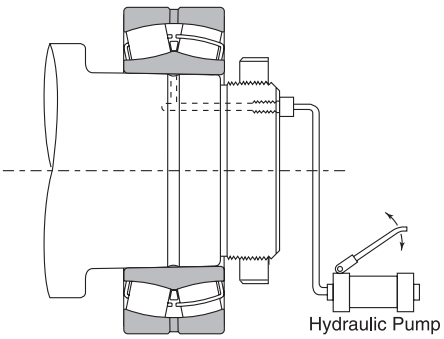

Removal Using Oil Injection

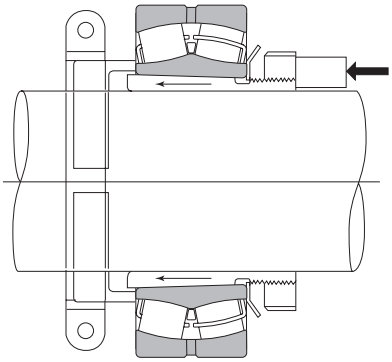

Removal of Adapter with Stop and Axial Pressure

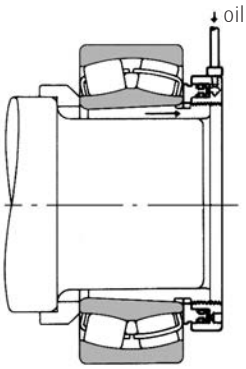

Removal Using a Hydraulic Nut

CLEANING, INSPECTION, EVALUATION, AND MAINTENANCE

CLEANING, INSPECTION AND EVALUATION

Cleaning Bearings

When bearings are inspected, their appearance should first be recorded and the amount and condition of the residual lubricant checked. After the lubricant has been sampled for examination, the bearing should be cleaned. In general, light oil or kerosene may be used as a washing solution. Dismounted bearings should first be given a preliminary cleaning followed by a finishing rinse. Each cleaning tank should be provided with a metal net to suspend the bearings in the oil without touching either the sides or bottom of the tank.

If the bearings are rotated with foreign matter in them during cleaning, the raceways may be damaged. The lubricant and other deposits should be removed in the oil bath during the initial rough cleaning with a brush or other means. After the bearing is relatively clean, it should be given a finishing rinse. The bearing should be rotated while immersed in the rinsing oil. The rinsing oil must always be kept clean.

Inspection and Evaluation

After being thoroughly cleaned, bearings should be examined for the condition of their raceways and external surfaces, the amount of cage wear, the increase in internal clearance and degradation of tolerances. These must be carefully checked to determine the possibility of bearing reuse.

In the case of small non-separable ball bearings, hold the bearing horizontally in one hand and rotate the outer ring to confirm that it turns smoothly. Separable bearings such as tapered roller bearings, may be checked by individually examining their rolling elements and the outer ring raceway. Large bearings cannot be rotated manually. However, the rolling elements, raceway surfaces, cages and contact surface of the ribs should be carefully examined visually.

The determination to reuse a bearing should be made only after considering the degree of bearing wear, the function of the machine, the importance of the bearing in the machine, operating condition, and the time until next inspection. If any of the following defects exist, the bearing should be replaced:

- Cracks or dents in the inner or outer ring raceways, rolling elements or cage
- Flaking of the raceways or rolling elements
- Significant scratching of the raceway surfaces, ribs or rolling elements
- Worn cages or loose rivets
- Rust or flaws on the raceway surfaces or rolling elements
- Significant impact or brinell traces on the raceway surfaces or rolling elements
- Discoloration by heat
- Significant damage to the seals or shields of grease sealed bearings

MAINTENANCE AND INSPECTION

Correcting Irregularities

In order to maintain the original performance of a bearing for as long as possible, proper maintenance and inspection should be performed. If proper procedures are used, many bearing problems can be avoided. Periodic maintenance following specified procedures is mandatory. This includes supervision of operating conditions, supply or replacement of lubricants, and regular periodic inspection.

Items that should be regularly checked during operation include bearing noise, vibration, temperature and lubrication. If an irregularity is found during operation, the cause should be determined and the proper corrective action taken immediately. If necessary, the bearing should be dismounted and examined in detail. Refer to Table J.48 on page J-48 for causes and corrections of operating irregularities.

It is very important to detect signs of irregularities early in operation. The NSK Bearing Monitor is a device that checks the condition of bearings and gives a warning of any abnormality. It can also be used to stop the machine automatically in order to prevent serious damage. It also helps to improve the level of and attention to maintenance schedules and procedures. Contact NSK for further information.

BEARING FAILURES – CAUSE AND CORRECTION

In general, if rolling bearings are correctly used, they will survive to their predicted fatigue life. Premature failure is usually caused by improperly mounting or dismounting, improper lubrication, penetration of foreign material, or inadequate inspection and maintenance.

It is often difficult to determine the real causes of premature failure. If all the conditions leading up to the time of failure are studied, it may be possible to avoid or reduce similar failures in the future.

The most frequent types of bearing failure, along with causes and corrective actions, are shown in Table J.49 on page J-53.

Flaking

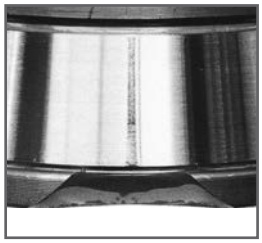
Fracture

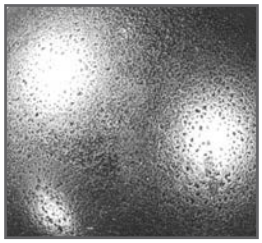
Pitting

Creep

Peeling

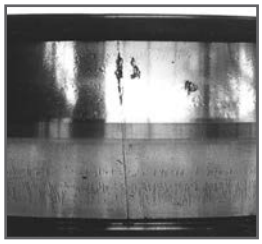
Cracks

Fretting

Seizure

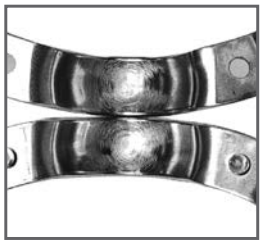
Scoring

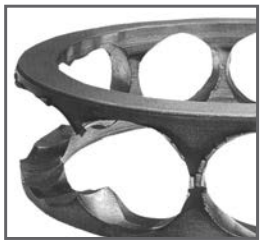
Cage Damage

Wear

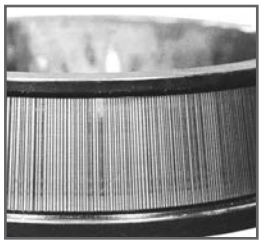
Electrical Corrosion

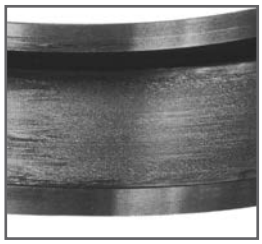
Smearing

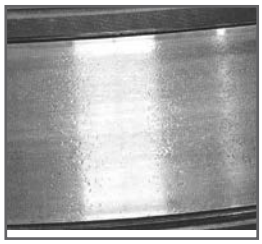
Denting

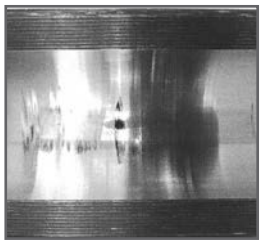
False Brinelling

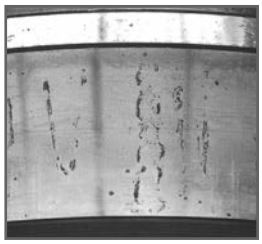
Rust and Corrosion

Table J.49 - Bearing Failures - Cause and Correction

Type of Failure		Probable Cause	Countermeasures
Flaking	Flaking of one-side of the raceway of radial bearings. Flaking of the raceways of double row bearings	Abnormal axial load	A loose fit should be used when mounting the outer ring of free-end bearings to allow axial expansion of the shaft
	Flaking of the raceway in a symmetrical pattern	Out of roundness of the housing bore	Correct the faulty housing
	Flaking pattern inclined relative to the raceway in radial ball bearings. Flaking near the edge of the raceway and rolling surfaces in roller bearings	Improper mounting, deflection of shaft, inadequate centering, inadequate tolerances for shaft and housing	Use care in mounting and centering, select a bearing with a larger clearance, and correct the squareness of the shaft and housing shoulder
	Flaking of raceway with same spacing as rolling elements	Large shock load during mounting, rusting while bearing is out of operation for a prolonged period	Use care in mounting and apply a rust preventive when machine operation is suspended for a long time
	Premature flaking of raceways and rolling elements	Insufficient clearance, excessive load, improper lubricant, rust, etc.	Select proper fit, bearing clearance, and lubricant
	Premature flaking of duplex bearing	Excessive preload	Adjust the preload
Scoring and Smearing	Scoring or smearing between raceway and rolling surfaces	Inadequate initial lubrication, excessively hard grease and high acceleration in starting	Use a softer grease and avoid rapid acceleration
	Spiral scoring or smearing of raceway surface of thrust ball bearing	Raceway rings are not parallel and excessive speed	Correct the mounting, apply a preload, or select another bearing type
	Scoring or smearing between the end face of the rollers and guide rib	Inadequate lubrication, incorrect mounting and large axial load	Select proper lubricants and modify the mounting
Cracks	Crack in outer or inner ring	Excessive shock load, excessive interference fit, incorrect shaft cylindricity, improper amount of sleeve taper, large fillet radius, development of thermal cracks and advancement of flaking	Examine the loading conditions, modify the fit of bearing sleeve. The fillet radius must be smaller than the bearing chamfer
	Crack in rolling element. Break in rib	Advancement of flaking, shock applied to the rib during mounting or dropped during handling	Be careful in handling and mounting
	Fracture of cage	Abnormal loading of cage due to incorrect mounting and improper lubrication	Reduce the mounting error and review the lubricating method and lubricant
Indentation	Indentations on raceway in same pattern as rolling elements	Shock load during mounting or excessive load when not rotating	Use care in handling
	Indentations on raceway and rolling elements	Foreign matter such as metallic chips or sand	Clean the housing, improve the seals, and use a clean lubricant
Abnormal Wear	False brinelling (phenomenon similar to brinelling)	Vibration of the bearing without rotation during shipment or rocking motion of small amplitude	Secure the shaft and housing, use oil as a lubricant and reduce vibration by applying a preload
	Fretting	Slight wearing of the fitting surface	Increase interference and apply oil
	Wearing of raceway, rolling elements, rib and cage	Penetration by foreign matter, incorrect lubrication, and rust	Use a different type of seal, clean the housing, and use a clean lubricant
	Creep	Insufficient interference or insufficient tightening of sleeve	Modify the fit or tighten the sleeve
Seizure	Discoloration or welding of raceway, rolling elements, and rib	Insufficient clearance, incorrect lubrication, or improper mounting	Review the internal clearance and bearing fit, supply an adequate amount of the proper lubricant and improve the mounting method and related parts
Eletric Burns	Fluting or corrugation or insulate the bearing	Melting due to electric arcing	Install a ground wire to stop flow of electricity
Corrosion and Rust	Rust and corrosion of fitting surfaces and bearing interior	Condensation of water from the air, fretting, or penetration by corrosive substances	Use care in storing and avoid high temperatures and high humidity; treatment for rust prevention is necessary when the operation is suspended for a long time

CONVERSION FACTORS

Table J.50 - Conversion Factors

	To Convert From	To	Multiply By	To Convert From	To	Multiply By
Length	Inch [in]	Millimeter [mm]	25.400000	Millimeter [mm]	Inch [in]	0.039370
	Foot [ft]	Meter [m]	0.304800	Meter [m]	Foot [ft]	3.280840
	Yard [yd]	Meter [m]	0.914400	Meter [m]	Yard [yd]	1.093613
	Mile (U.S. Statute) [mi]	Kilometer [km]	1.609347	Kilometer [km]	Mile (U.S. Statute) [mi]	0.621370
Area	Square Inch [in^2]	Square Millimeter [mm^2]	645.16	Square Millimeter [mm^2]	Square Inch [in^2]	0.002
	Square Foot [ft^2]	Square Meter [m^2]	0.092903	Square Meter [m^2]	Square Foot [ft^2]	10.763915
	Square Yard [yd^2]	Square Meter [m^2]	0.836127	Square Meter [m^2]	Square Yard [yd^2]	1.195991
	Square Mile [mi^2] (U.S. Statute)	Square Kilometer [km^2]	2.589998	Square Kilometer [km^2]	Square Mile [mi^2] (U.S. Statute)	0.386101
	Acre	Square Meter [m^2]	4046.873	Square Meter [m^2]	Acre	0.000247
	Acre	Hectare	0.404687	Hectare	Acre	2.471046
Volume	Cubic Inch [in^3]	Cubic Millimeter [mm^3]	16387.06	Cubic Millimeter [mm^3]	Cubic Inch [in^3]	0.000
	Cubic Foot [ft^3]	Cubic Meter [m^3]	0.028317	Cubic Meter [m^3]	Cubic Foot [ft^3]	35.314662
	Cubic Yard [yd^3]	Cubic Meter [m^3]	0.764555	Cubic Meter [m^3]	Cubic Yard [yd^3]	1.307950
	Gallon (U.S. Liquid) [gal]	Litre [l]	3.785412	Litre [l]	Gallon (U.S. Liquid) [gal]	0.264172
	Quart (U.S. Liquid) [qt]	Litre [l]	0.946353	Litre [l]	Quart (U.S. Liquid) [qt]	1.056688
Mass	Ounce [oz]	Gram [g]	28.349520	Gram [g]	Ounce [oz]	0.035274
	Pound [lb]	Kilogram [kg]	0.453592	Kilogram [kg]	Pound [lb]	2.204624
	Short Ton	Kilogram [kg]	907.185	Kilogram [kg]	Short Ton	0.001
Force	Pound-Force [lbf]	Kilogram [kg]	0.453592	Kilogram [kg]	Pound-Force [lbf]	2.204624
	Pound-Force [lbf]	Newton [N]	4.448222	Newton [N]	Pound-Force [lbf]	0.224809
Bending Moment	Pound-Force-Inch [lbf-in]	Newton-Meter [N-m]	0.112985	Newton-Meter [N-m]	Pound-Force-Inch [lbf-in]	8.850732
	Pound-Force-Foot [lbf-ft]	Newton-Meter [N-m]	1.355818	Newton-Meter [N-m]	Pound-Force-Foot [lbf-ft]	0.737562
Pressure, Stress	Pound-Force per Square Inch [lbf/in^2]	Kilopascal [kPa]	6.894757	Kilopascal [kPa]	Pound-Force per Square Inch [$lbf\text{-}in^2$]	0.145038
	Foot of Water (39.2 F)	Kilopascal [kPa]	2.988980	Kilopascal [kPa]	Foot of Water (39.2 F)	0.334562
	Inch of Mercury (32 F)	Kilopascal [kPa]	3.386380	Kilopascal [kPa]	Inch of Mercury (32 F)	0.295301
Energy, Work, Heat	Foot-Pound-Force [ft-lbf]	Joule [J]	1.355818	Joule [J]	Foot-Pound-Force [ft-lbf]	0.737562
	British Thermal Unit [Btu]	Joule [J]	1055.056	Joule [J]	British Thermal Unit [Btu]	0.001
	Calorie [cal]	Joule [J]	4.186800	Joule [J]	Calorie [cal]	0.238846
	Kilowatt Hour [kW-h]	Joule [J]	3600000	Joule [J]	Kilowatt Hour [kW-h]	2.78-7
Power	Foot-Pound-Force /Second [ft-lbs/s]	Watt [W]	1.355818	Watt [W]	Foot-Pound-Force / Second [ft-lbs/s]	0.737562
	British Thermal Unit / Hour [Btu]	Watt [W]	0.293071	Watt [W]	British Thermal Unit / Hour [Btu/h]	3.412142
	Horsepower (550 Ft. Lbf/s) [hp]	Kilowatt [kW]	0.745700	Kilowatt [kW]	Horsepower (550 Ft. Lbf/s) [hp]	1.341022
Angle	Degree	Radian [rad]	0.017453	Radian [rad]	Degree	57.295788
Temperature	Degree Farenheit [F]	Degree Celsius [C]	(F° -32)/1.8	Degree Celsius [C]	Degree Fahrenheit [F]	1.8xC°+32

Table J.49 - Metric Conversion

inch		mm
Fraction	Decimal	
1/64	0.0156	0.3969
1/32	0.0313	0.7938
	0.0394	1.0000
3/64	0.0469	1.1906
1/16	0.0625	1.5875
5/64	0.0781	1.9844
	0.0787	2.0000
3/32	0.0938	2.3813
7/64	0.1094	2.7781
	0.1181	3.0000
1/8	0.1250	3.1750
9/64	0.1406	3.5719
5/32	0.1563	3.9688
	0.1575	4.0000
11/64	0.1719	4.3656
3/16	0.1875	4.7625
	0.1969	5.0000
13/64	0.2031	5.1594
7/32	0.2188	5.5563
15/64	0.2344	5.9531
	0.2362	6.0000
1/4	0.2500	6.3500
17/64	0.2656	6.7469
	0.2756	7.0000
9/32	0.2813	7.1438
19/64	0.2969	7.5406
5/16	0.3125	7.9375
	0.3150	8.0000
21/64	0.3281	8.3344
11/32	0.3438	8.7313
	0.3543	9.0000
23/64	0.3594	9.1281
3/8	0.3750	9.5250
25/64	0.3906	9.9219
	0.3937	10.0000
13/32	0.4063	10.3188
27/64	0.4219	10.7156
	0.4331	11.0000
7/16	0.4375	11.1125
29/64	0.4531	11.5094
15/32	0.4688	11.9063
	0.4724	12.0000
31/64	0.4844	12.3031
1/2	0.5000	12.7000
	0.5118	13.0000
33/64	0.5156	13.0969
17/32	0.5313	13.4938
35/64	0.5469	13.8906
	0.5512	14.0000
9/16	0.5625	14.2875
37/64	0.5781	14.6844
	0.5906	15.0000
19/32	0.5938	15.0813
39/64	0.6094	15.4781

inch		mm
Fraction	Decimal	
5/8	0.6250	15.8750
	0.6299	16.0000
41/64	0.6406	16.2719
21/32	0.6563	16.6688
	0.6693	17.0000
43/64	0.6719	17.0656
11/16	0.6875	17.4625
45/64	0.7031	17.8594
	0.7087	18.0000
23/32	0.7188	18.2563
47/64	0.7344	18.6531
	0.7480	19.0000
3/4	0.7500	19.0500
49/64	0.7656	19.4469
25/32	0.7813	19.8438
	0.7874	20.0000
51/64	0.7969	20.2406
13/16	0.8125	20.6375
	0.8268	21.0000
53/64	0.8281	21.0344
27/32	0.8438	21.4313
55/64	0.8594	21.8281
	0.8661	22.0000
7/8	0.8750	22.2250
57/64	0.8906	22.6219
	0.9055	23.0000
29/32	0.9063	23.0188
59/64	0.9219	23.4156
15/16	0.9375	23.8125
	0.9449	24.0000
61/64	0.9531	24.2094
31/32	0.9688	24.6063
	0.9843	25.0000
63/64	0.9844	25.0031
1	1.0000	25.4000

NSK AMERICAS

Argentina
NSK Argentina SRL
Buenos Aires
54.11.4762.6556

Brazil
NSK Brasil Ltda.
Sao Paulo SP
55.11.3269.4700

Canada
NSK Canada Inc.
Mississauga ON
1.877.994.6675

Latin America
NSK Latin America Inc.
Miami FL
1.305.477.0605

Mexico
NSK Rodamientos Mexicana, S.A. de C.V.
Silao Guanajuato MX
52.472.103.9400

United States
NSK Corporation
Ann Arbor MI
1.888.446.5675

Website: www.nskamericas.com
NSK Global: www.nsk.com

Every care has been taken to ensure the accuracy of the data contained in this brochure, but no liability can be accepted for any loss or damage suffered through errors or omissions.

Printed in the USA ©NSK 2019. The contents of this publication are the copyright of the publishers.

BRG&LINRG - REV 9 / ACL / 19