LINEAR ACTUATORS

Pre-assembled, all-in-one linear actuators save design and installation time. Choose from NSK's two product lines: Monocarrier™ and Toughcarrier™.

SUBSCRIBE TO NSK NEWSLETTER

Linear Actuators

1 Monocarrier™

1.1 Features 4
1.2 Classifications and Series 6
1.3 Optional Components 8
1.4 Selection of Monocarrier™ 9

2 MCM Series

2.1 MCM Series Reference Number Coding 24
2.2 MCM Series Dimension Table of Standard Products 25
2.3 MCM Series Optional Accessories 41

3 MCH Series

3.1 MCH Series Reference Number Coding 76
3.2 MCH Series Dimension Table of Standard Products 77
3.3 MCH Series Optional Accessories 84

4 ToughCarrier™

4.1 Features 98
4.2 Classification and Series 98
4.3 Accessories 100
4.4 Selection of Toughcarrier 101
4.5 TCH Series Dimension Table of Standard Products 114
4.6 Accessory Specifications 120
4.7 Motor Bracket Compatability Table 133
4.8 Sensor Rail and Top Cover Unit Combination Table 134
4.9 Toughcarrier High-Thrust Series 137

5 Technical Materials

5.1 Sensor Specification 139
5.2 Characteristics and Evaluation Method 141
5.3 Special Specifications 142
5.4 Maintenance 143
5.5 NSK Clean Grease LG2 Specification 144

Monocarrier™

1.1 Features 4
1.2 Classifications and Series 6
1.3 Optional Components 8
1.4 Selection of Monocarrier™
1.4.1 Procedures for Selecting Monocarrier™ 9
1.4.2 Rigidity 9
1.4.3 Maximum Speed 10
1.4.4 Accuracy Grade 12
1.4.5 Stroke and Ball Screw Lead 12
1.4.6 Basic Load Rating 14
1.4.7 Estimation of Life Expectancy 16
1.4.8 Example of Life Estimation 18

1 Monocarrier™

1.1 Features

NSK's Monocarrier™ is the culmination of technology and innovation in linear motion. This lightweight, compact, single-axis linear actuator integrates NSK ball screw, linear guide and support bearings into one unit.

1 Lightweight, Compact Design

- Available in two different product styles depending on application:
  - › Lightweight Type: MCM Series
  - › Rigid Type: MCH Series

2 All-In-One Structure

- The all-in-one structure integrates a ball screw, linear guide and support bearings into a single unit to significantly reduce design and installation time.
- Multiple datum planes, the bottom and a lateral side of the rail, facilitate highly accurate installation.
- A wide selection of fine to high helix leads is available.

3 Long Term, Maintenance-Free Operation

- Use of NSK K1™ Lubrication Unit and grease maintains smooth lubricating performance for long periods in mechanical environments where lubrication is difficult to apply, where use of oil is not permitted because of hygienic issues or where the mechanical equipment requires a high degree of washing out.
- NSK K1™ Lubrication Unit is available for food processing machines and medical equipment.
- Grease for clean environments and for general machinery is available.

4 Superb Anti-Rust Capability

- Rust-resistant, low temperature chrome plating used on bodies and sliders is a standard feature.
- Low temperature fluoride chrome plating provides increased rust protection.

5 Quick Delivery

- Selected sizes are available within 4 week delivery time.
- All standard accessories are available within 4 week delivery time as well.
- Order quantity is limited to 5 pieces.

1.2 Classification and Series

	Lightweight	Beam Rigidity	Moment Rigidity
MCM Series	◎	○	○
MCH Series	○	◎	○

◎ = Excellent Performance ○ = Good Performance

MCM Series Cross-Sections

MCM02

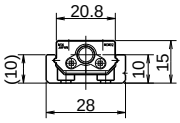

MCM06

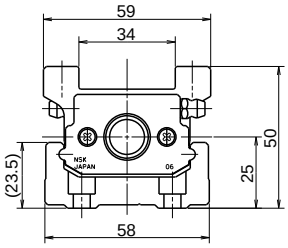

MCM03

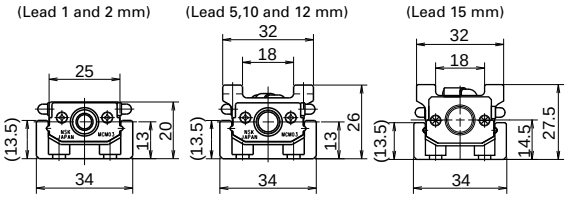

MCM08

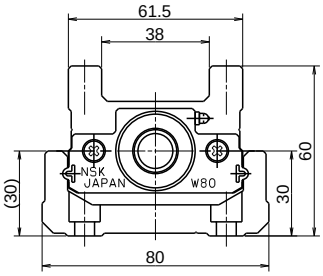

MCM05

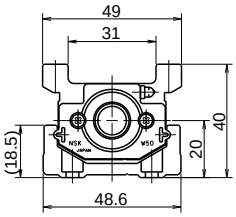

MCM10

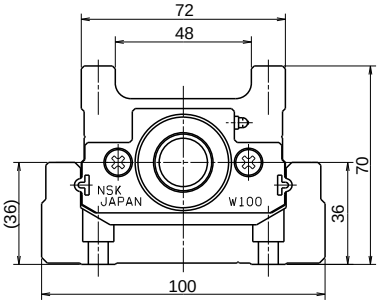

Accuracy	Long Stroke	Size Variation
◎	○	◎
◎	◎	○

◎ = Excellent Performance ○ = Good Performance

MCH Series Cross-Sections

MCH06

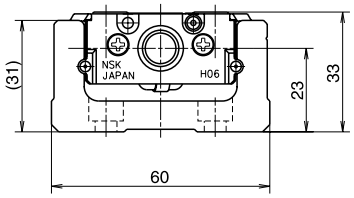

MCH09

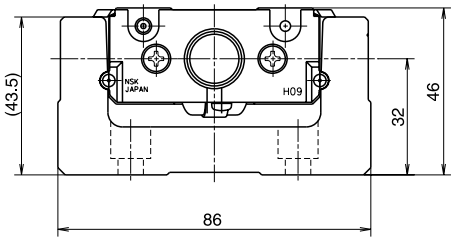

MCL06

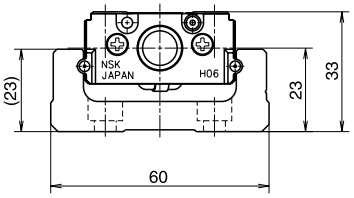

MCH10

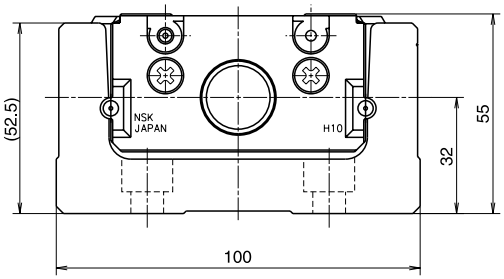

1.3 Optional Components

MCM Series

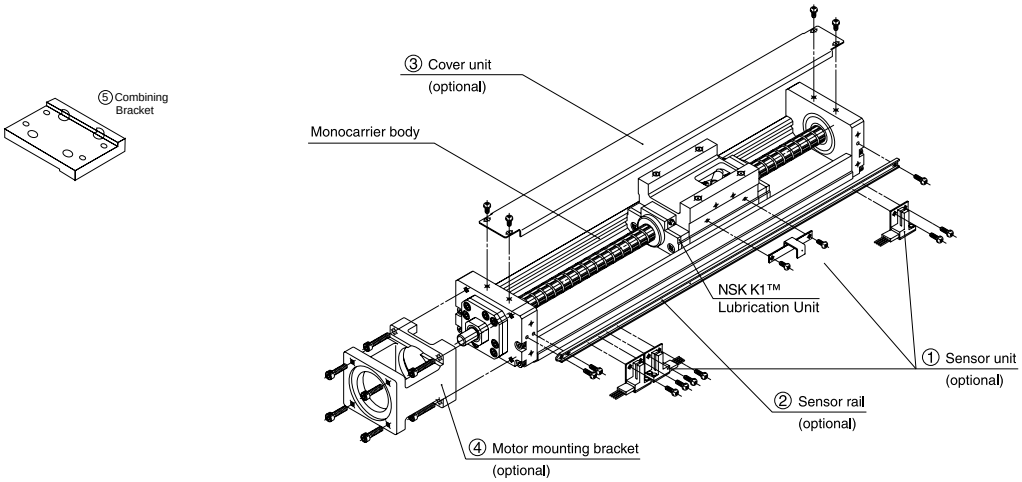

Assembly – Optional Components for MCM10 (example)

① Sensor unit: Sensors, sensor mounting parts and a sensor unit are available in a set
※ When a sensor unit is used, the full cover unit cannot be used.
② Sensor rail: Rail for sensor mounting is available.
③ Cover unit: Top cover or full cover (includes top cover and side cover) is available.
④ Motor mounting brackets are available for a variety of models.
⑤ Bracket for combining actuators into 2-axis mechanism. When bracket is used, the full cover unit cannot be used.
☆ NSK can assemble optional components upon request.

MCH Series

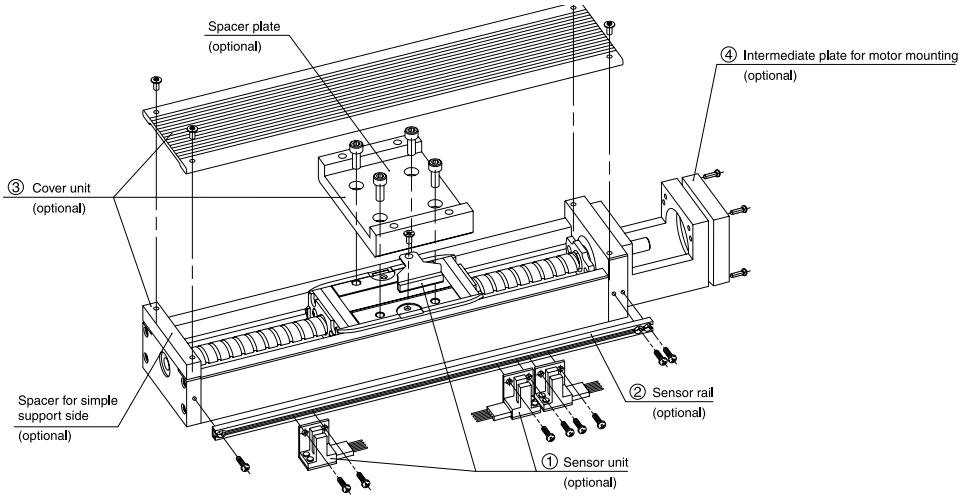

Assembly – Optional Components for MCH10 (example)

① Sensor unit: Sensors, sensor mounting parts and a sensor unit are available in a set.
② Sensor rail: Rail for sensor mounting is available.
③ Cover unit: Top cover (includes spacer plate and spacer for simple support side) is available.
④ Intermediate plate for motor mounting available for a variety of models.
☆ NSK can assemble optional components upon request.

1.4 Selection of Monocarrier™
1.4.1 Procedures for Selecting Monocarrier™

Select a reference type of Monocarrier™ based on stroke and rigidity.

Select a ball screw lead referring to "1.4.3 Maximum Rotational Speed" so that the rotational speed does not exceed the limit.

Study the loads to be applied to the linear guide and obtain the equivalent load (Fe), substituting them for equation ① or ② on Page 16. Obtain the mean effective load (Fm), substituting them for equation ③ on Page 17, then calculate the life.

Study the loads to be applied to the ball screw and support unit. Obtain the mean effective load (Fm), substituting them for equation ③ on Page 17, then calculate the life.

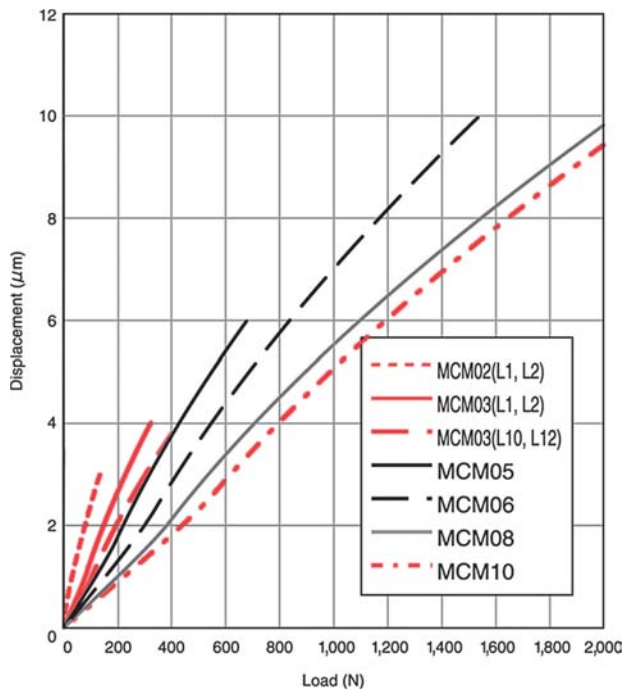

MCM Series Rigidity in Radial Direction

1.4.2. Rigidity

Rigidity of Rail

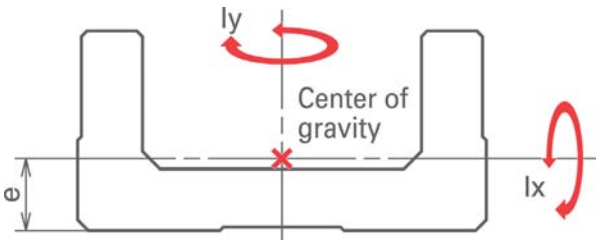

Model No.	Geometrical moment of inertia x 10^4 (mm^4)		Center of gravity (mm)	Mass (kg/100mm)
	Ix	Iy	e	w
MCM02	0.097	1.32	3.3	0.11
MCM03	0.300	3.30	4.5	0.18
MCM05	0.780	11.40	6.0	0.31
MCM06	2.140	26.10	7.0	0.57
MCM08	5.900	81.00	9.2	0.88
MCM10	15.600	219.00	12.2	1.52
MCH06	6.500	38.20	10.8	0.67
MCL06	2.580	29.60	7.8	0.56
MCH09	28.700	172.00	15.5	1.48
MCH10	54.000	307.00	18.0	1.93

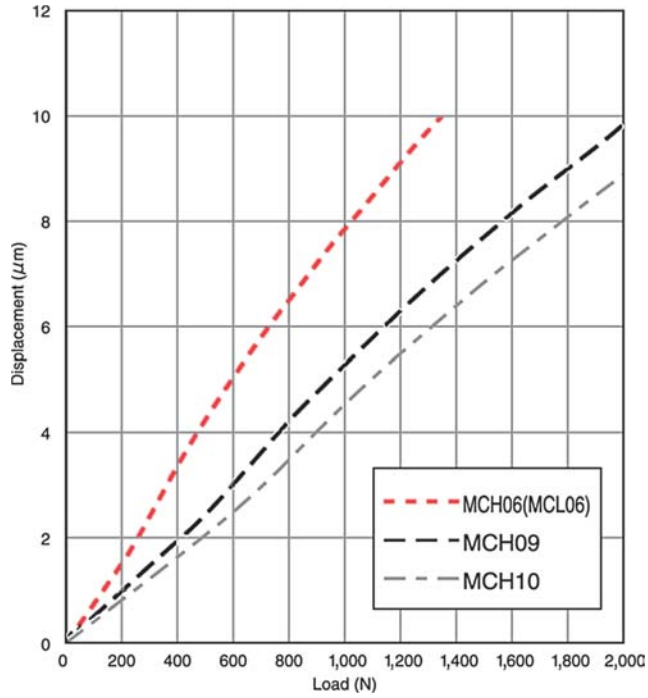

MCH Series Rigidity in Radial Direction

1.4.3 Maximum Speed

Maximum Speed of MCM Series

Maximum speed of Monocarrier™ is determined by the critical speed of ball screw shaft and the d・n value. Do not exceed the maximum speeds in the table below.

	Ball screw lead	Stroke (mm)	Rail length L_2 (mm)	Maximum speed (mm/s)
MCM02 Single slider	1	50	100	50
		100	150	
		150	200	
	2	50	100	100
		100	150	
		150	200	
MCM03 Single slider	1	50	115	50
		100	190	
		150	240	
	2	50	115	100
		100	190	
		150	240	
	5	50 ~ 250	140 ~ 340	250
	10	50 ~ 250	140 ~ 340	500
	12	50 ~ 250	140 ~ 340	600
	15	50 ~ 250	140 ~ 340	750
MCM05 Single slider	5	50 ~ 600	180 ~ 730	250
	10	50 ~ 600	180 ~ 730	500
	20	50 ~ 600	180 ~ 730	1 000
	30	300 ~ 400	430 ~ 530	2 500
		500	630	2 160
		600	730	1 570
MCM05 Double slider	10	60 ~ 510	280 ~ 730	500
	20	210 ~ 510	430 ~ 730	1 000
MCM06 Single slider	5	50 ~ 700	190 ~ 840	250
		800	940	190
	10	50 ~ 700	190 ~ 840	500
		800	940	390
	20	300 ~ 600	440 ~ 740	1 000
		700	840	990
		800	940	780

	Ball screw lead	Stroke (mm)	Rail length L_2 (mm)	Maximum speed (mm/s)
MCM06 Double slider	5	110 ~ 410	340 ~ 640	250
	10	110 ~ 710	340 ~ 940	500
	20	210 ~ 710	440 ~ 940	1 000
MCM08 Single slider	5	50 ~ 700	220 ~ 870	250
		800	970	190
	10	50 ~ 600	220 ~ 770	500
		700	870	490
		800	970	380
	20	50 ~ 600	220 ~ 770	1 000
		700	870	980
		800	970	770
	30	400	570	2 500
		500	670	2 480
		600	770	1 830
		700	870	1 400
MCM08 Double slider	10	80 ~ 680	370 ~ 970	500
	20	180 ~ 680	470 ~ 970	1 000
MCM10 Single slider	10	100 ~ 800	280 ~ 980	500
		900	1 080	420
		1 000	1 180	340
	20	100 ~ 800	280 ~ 980	1 000
		900	1 080	840
		1 000	1 180	690
	30	500	680	2 500
		600	780	2 430
		700	880	1 870
		800	980	1 480
MCM10 Double slider	10	70 ~ 670	380 ~ 980	500
		870	1 180	450
	20	170 ~ 670	480 ~ 980	1 000
		870	1 180	910

Note: When operating a Monocarrier™ near critical speed or exceeding maximum speed in the table, please consult NSK.

Maximum Speed of MCH Series

Maximum speed of Monocarrier™ is determined by the critical speed of ball screw shaft and the d・n value. Do not exceed the maximum speeds on the table below.

	Ball screw lead	Stroke (mm)	Rail length L_2 (mm)	Maximum speed (mm/s)
MCH06 MCL06 Single slider	5	50 ~ 500	150 ~ 600	250
	10	50 ~ 500	150 ~ 600	500
	20	50 ~ 500	150 ~ 600	1 000
MCH06 Double slider	5	100 ~ 300	300 ~ 400	250
	10	100 ~ 400	300 ~ 600	500
	20	400	600	1 000
MCH09 Single slider	5	100 ~ 700	240 ~ 840	250
		800	940	210
	10	100 ~ 700	240 ~ 840	500
		800	940	410
	20	100 ~ 700	240 ~ 840	1 000
		800	940	830
MCH09 Double slider	5	150 ~ 350	440 ~ 640	250
	10	150 ~ 650	440 ~ 940	500
	20	450	440	1 000
		650	940	1 000

	Ball screw lead	Stroke (mm)	Rail length L_2 (mm)	Maximum speed (mm/s)
MCH10 Single slider	10	100 ~ 800	280 ~ 980	500
		900	1 080	420
		1 000	1 180	350
		1 100	1 280	290
		1 200	1 380	250
	20	100 ~ 800	280 ~ 980	1 000
		900	1 080	840
		1 000	1 180	700
		1 100	1 280	580
		1 200	1 380	490
MCH10 Double slider	10	250 ~ 650	580 ~ 980	500
	20	250 ~ 750	580 ~ 1 080	1 000
		850	1 180	910
		950	1 280	760
		1 050	1 380	630

Note: When operating a Monocarrier™ near critical speed or exceeding maximum speed in the table, please consult NSK.

1.4.4 Accuracy Grade

The accuracy grade of Monocarrier™ standard inventories is high grade (H), except for lead 1 and 2 mm of MCM02 and MCM03. When you require strokes longer than 1,200 mm, please consult NSK about the accuracy grade.

(Unit: μm)

Grade	High grade			Precision			
Stroke (mm)	Repeatability	Running Parallelism (vertical)	Backlash	Repeatability	Positioning accuracy	Running Parallelism (vertical)	Backlash
~200	±10	14	20 or less	± 3	20	8	3 or less
~400		16			25	10	
~600		20			30	12	
~700		23			30	15	
~1,000		23			35	15	
~1,200		30			40	20	

1.4.5 Stroke and Ball Screw Lead

1.4.5.1 MCM Series Standard Combinations of Stroke and Ball Screw Lead

Single Slider

(● mark: Standard Product) (Unit: mm)

Model No.	MCM02		MCM03						MCM05				MCM06			MCM08				MCM10		
Stroke \ Lead	1	2	1	2	5	10	12	15	5	10	20	30	5	10	20	5	10	20	30	10	20	30
50	●	●	●	●	●	●	●	●	●	●	●		●	●	●	●	●					
100	●	●	●	●	●	●	●	●	●	●	●		●	●	●	●	●	●		●	●	
150	●	●	●	●	●	●	●	●	●	●	●		●	●	●	●	●	●		●	●	
200					●	●	●	●	●	●	●		●	●	●	●	●	●		●	●	
250					●	●	●	●	●	●	●		●	●	●	●	●	●		●	●	
300									●	●	●	●	●	●	●	●	●	●		●	●	
400									●	●	●	●	●	●	●	●	●	●	●	●	●	
500									●	●	●	●	●	●	●	●	●	●	●	●	●	●
600									●	●	●	●	●	●	●	●	●	●	●	●	●	●
700													●	●	●	●	●	●	●	●	●	●
800													●	●	●	●	●	●		●	●	●
900																				●	●	
1 000																				●	●	

Double Slider

(● mark: Standard Product) (Unit: mm)

Model No.	MCM05		MCM06			MCM08		MCM10	
stroke \ lead	10	20	5	10	20	10	20	10	20
60	●								
70								●	
80						●			
110	●		●	●					
160	●								
170								●	●
180						●	●		
210	●	●	●	●	●				
270								●	●
280						●	●		
310	●	●	●	●	●				
370								●	●
380						●	●		
410	●	●	●	●	●				
470								●	●
480						●	●		
510	●	●		●	●				
570								●	●
580						●	●		
610				●	●				
670								●	●
680						●	●		
710				●	●				
870								●	●

Please consult NSK about double slider of MCM02 and MCM03.

1.4.5.2 MCH Series Standard Combinations of Stroke and Ball Screw Lead

Single Slider

(● mark: Standard Product) (Unit: mm)

Model No.	MCH06			MCH09			MCH10	
stroke \ lead	5	10	20	5	10	20	10	20
50	●	●	●					
100	●	●	●	●	●	●	●	●
200	●	●	●	●	●	●	●	●
300	●	●	●	●	●	●	●	●
400	●	●	●	●	●	●	●	●
500	●	●	●	●	●	●	●	●
600				●	●	●	●	●
700				●	●	●	●	●
800				●	●	●	●	●
900							●	●
1,000							●	●
1,100							●	●
1,200							●	●

Double Slider

(● mark: Standard Product) (Unit: mm)

Model No.	MCH06			MCH09			MCH10	
stroke \ lead	5	10	20	5	10	20	10	20
100	●	●						
150				●	●			
200	●	●						
250				●	●		●	●
300	●	●						
350				●	●		●	●
400		●	●					
450					●	●	●	●
550							●	●
650					●	●	●	●
750								●
850								●
950								●
1,050								●

Limitations

	Model No.	Lead (mm)	Slider	Stroke (mm)
MCM Series	MCM02	1,2	Single	150
	MCM03	1,2	Single	150
		5,10,12,15	Single	350
	MCM05	5,10,20,30*	Single	900
			Double	810
	MCM06	5,10,20	Single	1,000
			Double	910
	MCM08	5,10,20,30*	Single	1,000
			Double	880
	MCM10	10,20,30*	Single	1,750
			Double	1,670
MCH Series	MCH06	5,10,20	Single	600
			Double	500
	MCH09	5,10,20	Single	1,000
			Double	850
	MCH10	10,20	Single	1,750
			Double	1,600
	MCL06	5,10,20	Single	500

*) Applicable only to single slider

1.4.6 Basic Load Rating

1.4.6.1 MCM Series Basic Load Rating

Basic Load Rating

Model No.	Lead ℓ (mm)	Shaft dia d (mm)	Basic dynamic load rating (N)				Basic static load rating (N)		Support unit Lim it load (N)
			Ball screw C_a	Linear guide C	Support unit C_a	Rated running distance La(km)	Ball screw C_{0a}	Linear guide C_0	
MCM02	1	Ø6	340 (High grade) 405 (Precision)	4 910	615	1	555 (High grade) 615 (Precision)	2 120	490
	2		340 (High grade) 405 (Precision)	3 900		2	555 (High grade) 615 (Precision)		
MCM03	1 2	Ø6	735 735	10 900 8 650	2 670	1 2	1 230	4 900	1 040
	5	Ø8	1 810	7 850		5	2 880	6 620	
	10 12		1 230 1 230	6 250 5 880		10 12	1 690		
	15	Ø10	1 760	5 440		15	2 680		
MCM05	5 10 20	Ø12	3 760 2 420 2 420	15 600 12 400 9 850	4 400	5 10 20	6 310 3 790 3 790	10 900	1 450
	30		3 260	8 600	6 550	30	5 400		2 730
MCM06	5 10 20	Ø15	7 070 7 070 4 560	25 200 20 000 15 900	6 550	5 10 20	12 800 12 800 7 730	17 000	2 730
MCM08	5 10 20 30	Ø15	7 070 7 070 4 560 5 070	30 800 24 400 19 400 16 930	7 100	5 10 20 30	12 800 12 800 7 730 8 730	22 800	3 040
MCM10	10 20 30	Ø20	11 000 7 060 11 700	33 500 26 600 23 200	7 600	10 20 30	21 100 12 700 22 700	29 400	3 380

Notes ・Basic dynamic and static load ratings indicate the values for one slider. ・Basic dynamic load rating of the linear guide is the load of perpendicular direction to the axis that allows 90% of a group of the same Monocarriers to operate, "Rated running distance" in the table, that is equivalent to 1 million revolutions of the ball screw and the support unit under the same condition without causing flaking by rolling contact fatigue. ・Basic dynamic load rating of the ball screw is a load-to-axial direction that allows 90% of ball screws of a group of the same Monocarriers to rotate 1 million revolutions under the same condition without causing flaking by rolling contact fatigue. ・Basic dynamic load rating of the support unit is a constant load-to-axial direction that allows 90% of support units of the same group of Monocarriers to rotate 1 million revolutions under the same condition without causing flaking by rolling contact fatigue. ・Basic static load rating is a load that results in combined permanent deformations at the contact points of balls and ball grooves of respective part, which is 0.01% of the diameter.

Basic Static Moment Load of Linear Guide

Model No.	Lead (mm)	Slider	Basic static moment (N · m)		
			Rolling M_{R0}	Pitching M_{P0}	Yawing M_{Y0}
MCM02	1, 2	Single	24	8	8
MCM03	1, 2 10, 12	Single	68 92	28 51	28 51
MCM05	5, 10, 20, 30*	Single Double	229 455	89 765	89 765
MCM06	5, 10, 20	Single Double	415 825	174 1,220	174 1,220
MCM08	5, 10, 20, 30*	Single Double	770 1,540	300 2,050	300 2,050
MCM10	10, 20, 30*	Single Double	1,170 2,340	425 2,940	425 2,940

・Basic static moment of double slider is a value when two sliders equipped with NSK K1™ Lubrication Units are butted against each other.
・The basic static moment is the value when a rolling contact pressure of balls exceeds 4,000N/mm^2.
・If operating under extreme load conditions, please consult NSK for estimation of fatigue life.
*) Applicable only to single slider.

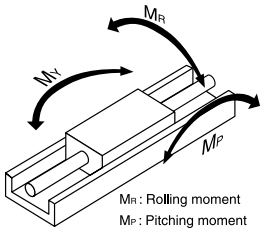

M_R : Rolling moment
M_P : Pitching moment
M_Y : Yawing moment

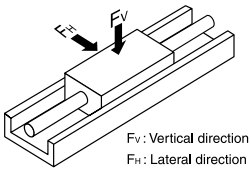

F_V : Vertical direction load
F_H : Lateral direction load

1.4.6.2 MCH Series Basic Load Rating

Basic Load Rating

Model No.	Lead l (mm)	Shaft dia d (mm)	Basic dynamic load rating (N)				Basic static load rating (N)		Support unit Limit load (N)
			Ball screw C_a	Linear guide C	Support unit C_a	Rated running distance La (km)	Ball screw C_{0a}	Linear guide C_0	
MCH06 (MCL06)	5	Ø12	3 760	22 800	4 400	5	6 310	16 300	1 450
	10		2 420	18 100		10	3 790		
	20		2 420	14 400		20	3 790		
MCH09	5	Ø15	7 070	40 600	7 100	5	12 800	30 500	3 040
	10		7 070	32 200		10	12 800		
	20		4 560	25 500		20	7 730		
MCH10	10	Ø20	11 000	44 600	7 600	10	21 100	42 000	3 380
	20		7 060	35 400		20	12 700		

Notes ・Basic dynamic and static load ratings indicate the values for one slider. ・Basic dynamic load rating of the linear guide is the load of perpendicular direction to the axis that allows 90% of a group of the same Monocarriers to operate, "Rated running distance" in the table, that is equivalent to 1 million revolutions of the ball screw and the support unit under the same condition without causing flaking by rolling contact fatigue. ・Basic dynamic load rating of the ball screw is a load-to-axial direction that allows 90% of ball screws of a group of the same Monocarriers to rotate 1 million revolutions under the same condition without causing flaking by rolling contact fatigue. ・Basic dynamic load rating of the support unit is a constant load-to-axial direction that allows 90% of support units of the same group of Monocarriers to rotate 1 million revolutions under the same condition without causing flaking by rolling contact fatigue. ・Basic static load rating is a load that results in combined permanent deformations at the contact points of balls and ball grooves of respective part, which is 0.01% of the diameter.

Basic Static Moment Load of Linear Guide

Model No.	Slider	Basic static moment (N · m)		
		Rolling M_{R0}	Pitching M_{P0}	Yawing M_{Y0}
MCH06 (MCL06)	Single	335	133	133
	Double	770	730	730
MCH09	Single	890	385	385
	Double	1,780	2,070	2,070
MCH10	Single	1,460	610	610
	Double	2,920	3,430	3,430

・Basic static moment of double slider is a value when two sliders equipped with NSK K1™ Lubrication Units are butted against each other.
・The basic static moment is the value when a rolling contact pressure of balls exceeds 4,000N/mm^2.
・If operating under extreme load conditions, please consult NSK for estimation of fatigue life.

1.4.7 Estimation of Life Expectancy

1.4.7.1 Life of Linear Guide

Study the load to be applied to the linear guide of Monocarrier. The equivalent load (Fe) is determined by substituting equation ① or ② depending on the number of sliders.

• **Single Slider**

① $Fe = Y_H F_H + Y_V F_V + Y_R \varepsilon_R M_R + Y_P \varepsilon_P M_P + Y_Y \varepsilon_Y M_Y \cdots$

• **Double Slider**

② $Fe = \frac{Y_H F_H}{2} + \frac{Y_V F_V}{2} + Y_R \varepsilon_{Rd} M_R + Y_P \varepsilon_{Pd} M_P + Y_Y \varepsilon_{Yd} M_Y \cdots$

F_H : Lateral direction load acting on the slider (N)
F_V : Vertical direction load acting on the slider (N)
M_R : Rolling moment acting on the slider (N・m)
M_P : Pitching moment acting on the slider (N・m)
M_Y : Yawing moment acting on the slider (N・m)
ε_R, ε_{Rd} : Dynamic equivalent coefficient to rolling moment
ε_P, ε_{Pd} : Dynamic equivalent coefficient to pitching moment
ε_Y, ε_{Yd} : Dynamic equivalent coefficient to yawing moment

Refer to table below for Dynamic Equivalent Coefficient.

Y_H, Y_V, Y_R, Y_P, Y_Y: 1.0 or 0.5

In equations ① and ② for obtaining equivalent load (Fe), among F_H, F_V, $\varepsilon_P M_P$, $\varepsilon_R M_R$, $\varepsilon_Y M_Y$, the maximum load is assumed to be 1.0 and others are to be 0.5.

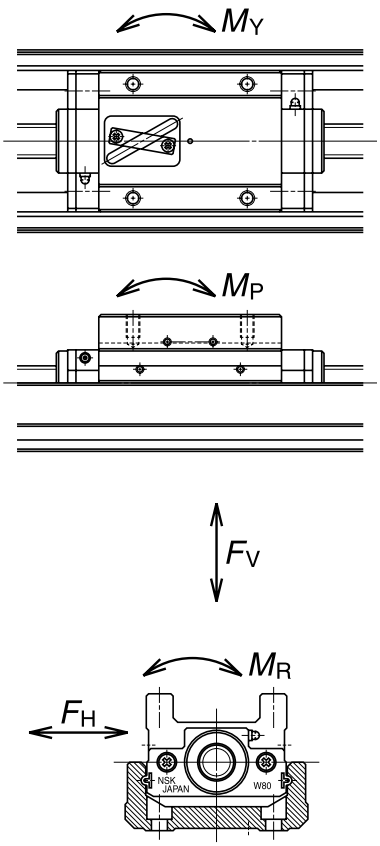

Direction of Load

Dynamic Equivalent Coefficient

Model No.	MCM02	MCM03		MCM05	MCM06	MCM08	MCM10	MCH06 MCL06	MCH09	MCH10
		lead 1, 2	lead 5, 10, 12, 15							
ε_R	95.2	79.4	79.4	52.6	45.5	32.5	27.8	48.3	34.5	28.6
ε_P	174.0	113.9	84.2	81.3	65.1	48.8	45.2	75.1	47.9	41.0
ε_Y	174.0	114.0	84.0	81.3	65.1	49.0	45.0	75.1	47.9	41.0
ε_{Rd}	–	–	–	26.3	22.7	16.3	13.9	24.2	17.2	14.3
ε_{Pd}	–	–	–	10.4 (12.2)	9.7 (11.5)	7.6 (8.6)	7.1 (8.0)	11.4 (13.2)	8.11 (9.10)	6.98 (7.82)
ε_{Yd}	–	–	–	10.4 (12.2)	9.7 (11.5)	7.6 (8.6)	7.1 (8.0)	11.4 (13.2)	8.11 (9.10)	6.98 (7.82)

Note: Parenthesized figures are dynamic equivalent coefficient in case of the Monocarrier™ without NSK K1™ lubrication unit.

In a case when the load acting on the slider may fluctuate (in general, M_P, M_Y may fluctuate with the acceleration/deceleration of the slider), the mean effective load is determined by Eq. ③.

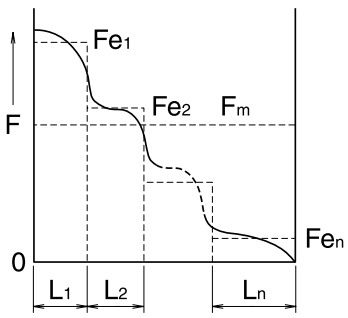

Stepwise Fluctuating Load

Travelling distance under the equivalent load Fe_1: L_1
Travelling distance under the equivalent load Fe_2: L_2
・ ・ ・ ・ ・ ・ ・ ・ ・ ・
Travelling distance under the equivalent load Fe_n: L_n

$$Fm = \sqrt[3]{\frac{1}{L}\left(Fe_1^3 L_1 + Fe_2^3 L_2 + \cdots Fe_n^3 L_n\right)} \cdots ③$$

Fm: Mean effective load of fluctuating loads
L: Total travelling distance

The life of the linear guide is calculated by Eq.④

$$L = L_a \left[\frac{C}{f_w \cdot Fm}\right]^3 \cdots\cdots\cdots\cdots ④$$

L: Life of the linear guide (km)
Fm: Mean effective load acting on the linear guide (N)
C: Basic dynamic load rating of the linear guide (N)
L_a: Travelling distance (km)
f_w: Load factor (Refer to Values of Load Factor table)

When the estimated life does not meet the required life, the life of the linear guide is to be calculated again after the following measures are taken:
1. Change from the single slider type to double slider type.
2. Use a larger size Monocarrier™.

1.4.7.2 Life of Ball Screw (Support Unit)

The mean effective load is determined from the axial loads.

For calculation of the mean effective load, use Eq.③.

The life of the ball screw is calculated by Eq.⑤.

$$L = \ell \times \left[\frac{C_a}{f_w \cdot Fm}\right]^3 \times 10_6 \cdots\cdots\cdots\cdots ⑤$$

ℓ : Lead of ball screw (mm)

L : Life of ball screw (mm)

C_a: Basic dynamic load rating of the ball screw (N)

Fm: Mean effective load acting on the ball screw (N)

f_w: Load factor (Refer to Values of Load Factor table)

The life of the support unit is calculated by Eq. ⑤ .
If the life of the ball screw/support unit does not meet the required life, use a larger size Monocarrier™.

Upon calculations as mentioned above, the selection of the Monocarrier™ is completed.

Values of Load Factor f_w

Operating Conditions	Load Factor f_w
At smooth operation with no mechanical shock	1.0~1.2
At normal operation	1.2~1.5
At operation with mechanical shock and vibrations	1.5~3.0

1.4.8 Example of Life Estimation

This section offers an example of how to estimate the life of the Monocarrier based on the life of each component.

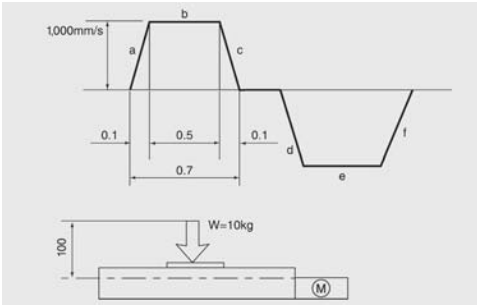

1 Use condition

Stroke	: 600mm
Maximum Speed	: 1,000mm/s
Load Mass	: W=10kg
Acceleration	: g=9.8m/s^2
Setting Position	: Horizontal
Operating Profile	: See above figure

2 Selection of Model Number (Interim Selection)

First, select a greater ball screw lead since the maximum speed is 1,000mm/s. The interim selection is MCM06060H20K00, a single slider specification MCM06 that has a 600mm stroke, since the stroke is 600mm.

3 Calculation

3-1 Linear Guide

3-1-1 Fatigue Life

Multiply the result of the Eq.①by the dynamic equivalent coefficient to convert the load volume. From the above operation profile,

i) Constant speed $Fe_1=Y_vF_v=Y_vW_g=1 \cdot 10 \cdot 9.8= 98$ N

ii) Accelerating $Fe_2=Y_vF_v+Y_P\varepsilon_PM_P=0.5 \cdot 10 \cdot 9.8+1 \cdot 65.1 \cdot 0.1 \cdot 100=700$ N

iii) Decelerating $Fe_3=Y_vF_v+Y_P\varepsilon_PM_P=0.5 \cdot 10 \cdot 9.8+1 \cdot 65.1 \cdot 0.1 \cdot 100=700$ N

Mean effective load *Fm*

$$Fm = \sqrt[3]{\frac{1}{L}\left(Fe_1^3 \cdot L_1 + Fe_2^3 \cdot L_2 + Fe_3^3 \cdot L_3\right)}$$

$$= \sqrt[3]{\frac{1}{600}\left(98^3 \cdot 500 + 700^3 \cdot 50 + 700^3 \cdot 50\right)}$$

$$= 387 \text{ N}$$

$$L = \left(\frac{C}{f_w \cdot F_m}\right)^3 \times L_a$$

$$= \left(\frac{15{,}900}{1.2 \cdot 387}\right)^3 \times 20$$

$$= 8.02 \times 10^5 \text{ km}$$

3-1-2 Static Safety Factor

Divide the basic static load rating by the maximum load.

$$F_s = \frac{C_0}{Fe} = \frac{C_0}{Fe_2} = \frac{17{,}000}{700} = 24.2$$

3-2 Ball Screw

3-2-1 Fatigue Life

Obtain the axial load of each stage of operation, referring to the operation profile, and then calculate the mean load.

By the process above,

i) Constant speed
$Fe_1=\mu \cdot W \cdot g=0.01 \cdot 10 \cdot 9.8=0.98$

ii) Accelerating
$Fe_2=Fe_1+W \cdot \alpha=101$ N

iii) Decelerating
$Fe_3=Fe_1-W \cdot \alpha=99$ N

Axial mean effective load *Fm*

$$Fm = \sqrt[3]{\frac{1}{L}\left(Fe_1^3 \cdot L_1 + Fe_2^3 \cdot L_2 + Fe_3^3 \cdot L_3\right)}$$

$$= \sqrt[3]{\frac{1}{600}\left(0.98^3 \cdot 500 + 101^3 \cdot 50 + 99^3 \cdot 50\right)}$$

$$= 55 \text{N}$$

$$L = \left(\frac{C_a}{f_w \cdot F_m}\right)^3 \times \ell \times 10^6$$

$$= \left(\frac{4{,}560}{1.2 \cdot 55}\right)^3 \times 20 \times 10^6 \text{(mm)}$$

$$= 6.5 \times 10^6 \text{ km}$$

3-2-2 Static Safety Factor

Divide the basic static load rating by the maximum axial load.

$$F_s = \frac{C_{0a}}{Fe} = \frac{C_{0a}}{Fe_2} = \frac{7{,}750}{101} = 76.5$$

3-2-3 Maximum Rotational Speed

According to the table of maximum rotational speed, MCM06 with 20mm lead and 600mm stroke is possible to operate under the maximum speed of 1,000mm/s.

3-3 Support Unit

3-3-1 Fatigue Life

Use the axial load *Fm* = 55 N, resulting from the calculation 3-2-1 (above).

$$L = \left(\frac{C_a}{fw \cdot Fm}\right)^3 \times \ell \times 10^6 = \left(\frac{6{,}550}{1.2 \times 55}\right)^3 \times 20 \times 10^6 \text{(mm)}$$

$$= 1.95 \times 10^7 \text{ km}$$

3-3-2 Static Safety Factor

Divide the limit load by the maximum axial load.

$$F_S = \frac{C_{0a}}{Fe} = \frac{C_{0a}}{Fe_2} = \frac{2{,}730}{101} = 27.0$$

3-4 Result

MCM06060H20K00	Linear guide	Ball screw	Support unit
Fatigue life	8.02×10^5	6.5×10^6	1.95×10^7
Static safety factor	24.2	76.7	27.0

In this case, the linear guide has the shortest fatigue life of the components. Therefore, the linear guide fatigue life is used as the life of the Monocarrier. The interim selection of MCM06060H20K00, that is chosen based on the use conditions, satisfies the required life.

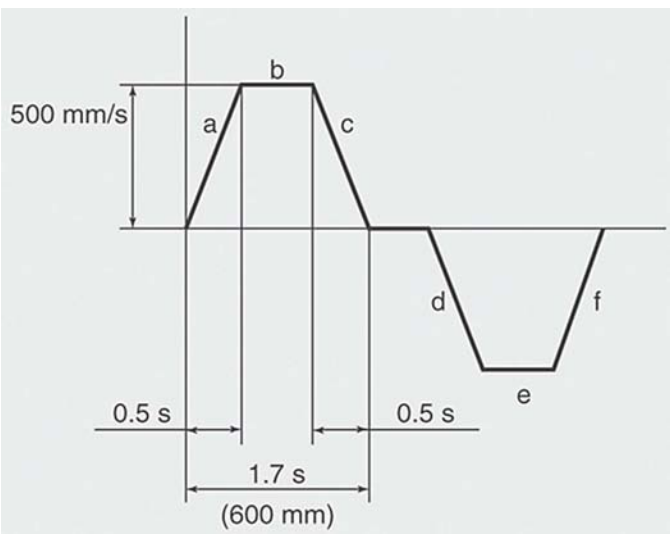

1 Use condition

Stroke : 600 mm
Maximum speed : 500 mm/s
Load mass : W = 20 kg
Acceleration : 9.8 m/s²
Setting position : Horizontal
Operating profile : See above figure

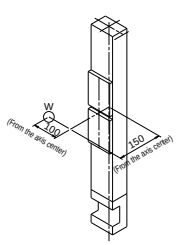

2 Selection of Model number (Interim Selection)

Select a 10 mm lead ball screw as the maximum speed is 500 mm/s.

The interim selection is MCM08068H10D00 as a double slider specification of MCM08 has 680 mm stroke, and the setting position is vertical.

4 Calculation

4-1 Linear Guide

4-1-1 Fatigue Life

Multiply the result of the Eq. 2) by the dynamic equivalent coefficient to convert the load volume. From operation profile, the acceleration is 1 m/s².

i) Constant speed $Fe_1 = Y_P \times \varepsilon_{Pd} \times M_P + Y_Y \times \varepsilon_{Yd} \times M_Y = 1 \cdot 7.6 \cdot 20 \cdot 9.8 \cdot 0.15 + 0.5 \cdot 7.6 \cdot 20 \cdot 9.8 \cdot 0.1 = 298$ N

ii) Accelerating $Fe_2 = Y_P \times \varepsilon_{Pd} \times M_P + Y_Y \times \varepsilon_{Yd} \times M_Y = 1 \cdot 7.6 \cdot 20 \cdot (9.8 + 1.0) \cdot 0.15 + 0.5 \cdot 7.6 \cdot 20 \cdot (9.8 + 1.0) \cdot 0.1 = 329$ N

iii) Decelerating $Fe_3 = Y_P \times \varepsilon_{Pd} \times M_P + Y_Y \times \varepsilon_{Yd} \times M_Y = 1 \cdot 7.6 \cdot 20 \cdot (9.8 - 1.0) \cdot 0.15 + 0.5 \cdot 7.6 \cdot 20 \cdot (9.8 - 1.0) \cdot 0.1 = 268$ N

Mean effective load ***Fm***

$$Fm = \sqrt[3]{\frac{1}{L}\left(Fe_1^3 \cdot L_1 + Fe_2^3 \cdot L_2 + Fe_3^3 \cdot L_3\right)}$$

$$= \sqrt[3]{\frac{1}{600}\left(298^3 \cdot 350 + 329^3 \cdot 125 + 268^3 \cdot 125\right)}$$

$$= 300 \text{ N}$$

$$L = L_a \times \left(\frac{C}{f_w \cdot F_m}\right)^3$$

$$= 10 \times \left(\frac{24\,400}{1.2 \cdot 300}\right)^3$$

$$= 3.11 \times 10^6 \text{ km}$$

4-1-2 Static Safety Factor

Divide the basic static load rating by the maximum load.

$$F_S = \frac{C_0}{Fe} = \frac{C_0}{Fe_2} = \frac{22\,800}{329} = 69.3$$

4-2 Ball Screw

4-2-1 Fatigue Life

Obtain the axial load of each stage of operation referring to the operation profile, then calculate the mean load.

i) Constant speed
$Fe_1 = W \cdot g = 20 \cdot 9.8 = 196$ N

ii) Accelerating
$Fe_2 = Fe_1 + W \cdot \alpha = 196 + 20 \cdot 1 = 216$ N

iii) Decelerating
$Fe_3 = Fe_1 - W \cdot \alpha = 196 - 20 \cdot 1 = 176$ N

Axial mean effective load ***Fm***

$$Fm = \sqrt[3]{\frac{1}{L}\left(Fe_1^3 \cdot L_1 + Fe_2^3 \cdot L_2 + Fe_3^3 \cdot L_3\right)}$$
$$= \sqrt[3]{\frac{1}{600}\left(196^3 \cdot 350 + 216^3 \cdot 125 + 176^3 \cdot 125\right)}$$
$$= 197 \text{ N}$$

$$L = \ell \times \left(\frac{C_a}{f_w \cdot F_m}\right)^3 \times 10^6$$
$$= 10 \times \left(\frac{7\,060}{1.2 \cdot 197}\right)^3 \times 10^6 \text{ (mm)}$$
$$= 2.66 \times 10^5 \text{ km}$$

4-2-2 Static Safety Factor

Divide the basic static load rating by the maximum axial load.

$$F_S = \frac{C_{0a}}{Fe} = \frac{C_{0a}}{Fe_2} = \frac{12\,800}{216} = 59.2$$

4-3 Support Unit

4-3-1 Fatigue Life

Use the axial load Fm = 197 N, that is the result of above calculation 3-2-1.

$$L = \ell \times \left(\frac{C_a}{fw \cdot Fm}\right)^3 \times 10^6 = 10 \times \left(\frac{7\,100}{1.2 \times 197}\right)^3 \times 10^6 \text{ (mm)}$$
$$= 2.70 \times 10^5 \text{ km}$$

4-3-2 Static Safety Factor

Divide the limit load by the maximum axial load.

$$F_S = \frac{C_{0a}}{Fe} = \frac{C_{0a}}{Fe_2} = \frac{3\,040}{216} = 14.0$$

4-4 Result

MCM08068H10D00	Linear guide	Ball screw	Support unit
Fatigue life	3.11×10^5 km	2.66×10^5 km	2.70×10^5 km
Static safety factor	69.3	59.2	14.0

Notes

2.1 MCM Series Reference Number Coding 24
2.2 MCM Series Dimension Table of Standard Products
MCM02 25
MCM03 26
MCM05 29
MCM06 32
MCM08 35
MCM10 38
2.3 MCM Series Optional Accessories
2.3.1 Sensor Unit 41
2.3.2 Cover Unit 45
2.3.3 Motor Bracket
By NEMA Size 47
By Standard Size 54
2.3.4 Combining Brackets 70

2 MCM Series
2.1 MCM Series Reference Number Coding

[Body]

MC	M	08	040	H	10	K	0	0
MONOCARRIER	**SERIES**	**NOMINAL SIZE**	**STROKE**	**ACCURACY GRADE**	**BALL SCREW LEAD**	**SLIDER SPECIFICATION**	**GREASE SPECIFICATION**	**NSK MANAGEMENT NUMBER**
MC: Monocarrier	**M:** MCM Series	**Rail width, unit:** 10 mm	**Unit:** 10 mm	**H:** High Precision **P:** Precision Grade	**Unit:** mm	**K:** Single slider **D:** Double slider	**0:** Standard AS2 **B:** Clean Grease LG2	

[With Optional Accessories]

MC	E	08 040 H 10 K 0 0	K	0	0	0
	OPTIONAL ACCESSORIES		**NSK MANAGEMENT NUMBER**	**SENSOR UNIT**	**COVER UNIT**	**MOTOR BRACKET**
	E: With Optional Accessories					

Note: Optional components are available separately.

Sensor Unit

Reference Number Code	Specification	Reference Number
0	N/A	—
1	Proximity switch (normally close contact 3 pieces)	MC – SRxx – 10
2	Proximity switch (normally open contact 3 pieces)	MC – SRxx – 11
3	Proximity switch (normally open contact 1 piece, normally close contact 2 pieces)	MC – SRxx – 12
4	Photo sensor 3 piece	MC – SRxx – 13

Note xx: Reference number

Cover Unit

Reference Number Code	Specification	Reference Number
0	N/A	—
1	With top cover	MC – CVxxxxx – 01 (02) ※
2	Full cover	MC – CVxxxxx – 00

Note: ※Monocarrier "-02" is only used for MCM03.

Note xxxxx: Reference number and stroke number

The Reference Number of Motor Bracket

Reference Number Code	Reference Number				
	MCM03	MCM05	MCM06	MCM08	MCM10
0	N/A	N/A	N/A	N/A	N/A
1	MC-BK03-146-00	MC-BK05-145-00	MC-BK06-145-00	MC-BK08-145-00	MC-BK10-170-00
2	MC-BK03-148-01	MC-BK05-146-00	MC-BK06-146-00	MC-BK08-146-00	MC-BK10-170-01
3	MC-BK03-231-00	MC-BK05-148-00	MC-BK06-148-00	MC-BK08-160-00	MC-BK10-190-00
4	—	MC-BK05-160-00	MC-BK06-160-00	MC-BK08-170-00	MC-BK10-270-00
5	—	MC-BK05-250-00	MC-BK06-170-00	MC-BK08-170-01	—
6	—	—	MC-BK06-170-01	MC-BK08-190-00	—
7	—	—	MC-BK06-250-00	MC-BK08-250-00	—
8	—	—	—	MC-BK08-270-00	—

2.2 MCM Series Dimension Table of Standard Products

MCM02

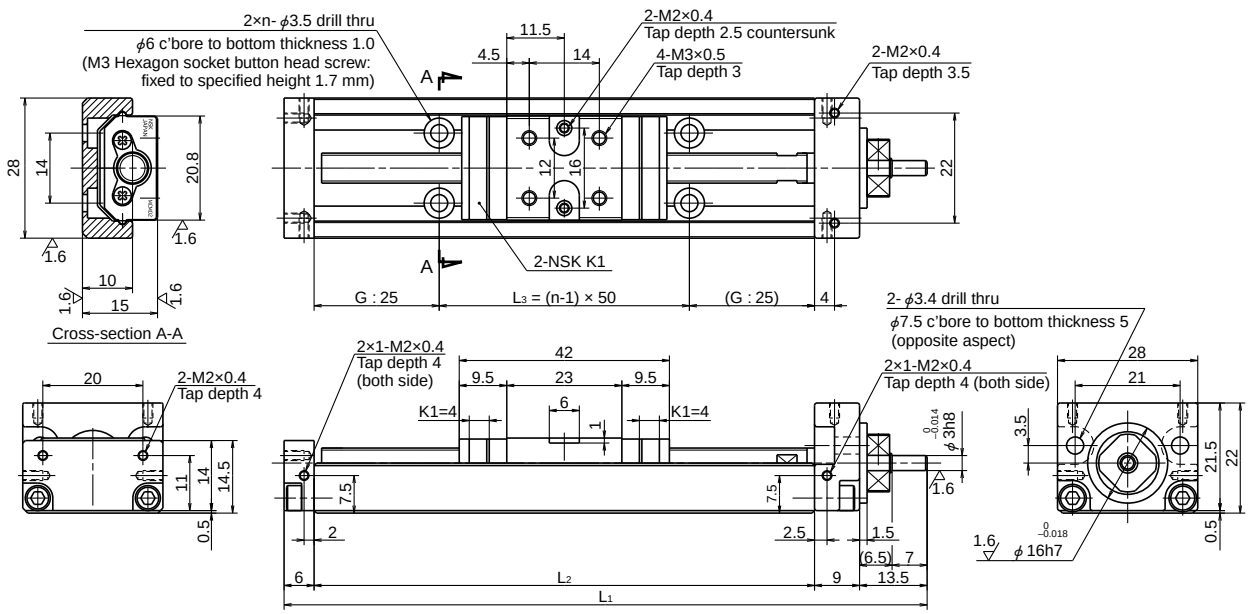

Dimension of MCM02 (Single Slider)

Reference number	Nominal stroke (mm)	Stroke limit (mm)	Ball screw lead (mm)	Body length (mm)			No. of mounting holes n	Inertia ×10^{-7} (kg・m^2)	Mass (kg)
				L_1	L_2	L_3			
MCM02005H01K MCM02005P01K MCM02005H02K MCM02005P02K	50	58	1 2	128.5	100	50	2	0.93	0.26
MCM02010H01K MCM02010P01K MCM02010H02K MCM02010P02K	100	108	1 2	178.5	150	100	3	1.36	0.32
MCM02015H01K MCM02015P01K MCM02015H02K MCM02015P02K	150	158	1 2	228.5	200	150	4	1.81	0.39

Monocarrier dynamic torque specification (N・cm)			
		High grade	Precision
Ball screw lead (mm)	1 2	0.1 - 1.3	0.2 - 1.6

1. Frictional resistance of NSK K1™ Lubrication Unit is included in the dynamic torque in the table.
2. Grease is packed into the ball screw, linear guide parts and support unit.
3. Consult NSK for life estimates under large moment loads.

Basic Load Rating

Lead	Shaft dia	Basic dynamic load rating (N)				Basic static load rating (N)		Support unit Load limit (N)
ℓ (mm)	d (mm)	Ball screw C_a	Linear guides C	Support unit C_a	Rated running distance L_a (km)	Ball screw C_{0a}	Linear guides C_0	
1	Ø6	340 (High grade) 405 (Precision)	4,910	615	1	555 (High grade) 615 (Precision)	2,120	490
2		340 (High grade) 405 (Precision)	3,900		2	555 (High grade) 615 (Precision)		

Basic Static Moment Load of Linear Guide

Slider	Basic static moment load (N・m)		
	Rolling M_{R0}	Pitching M_{P0}	Yawing M_{Y0}
Single	24	8	8

MCM03

Accuracy Grade: Precision (P)

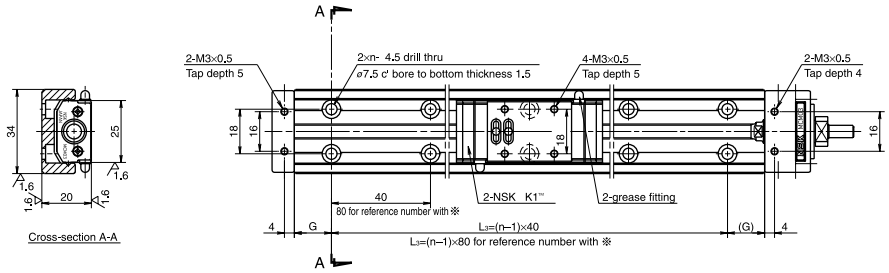

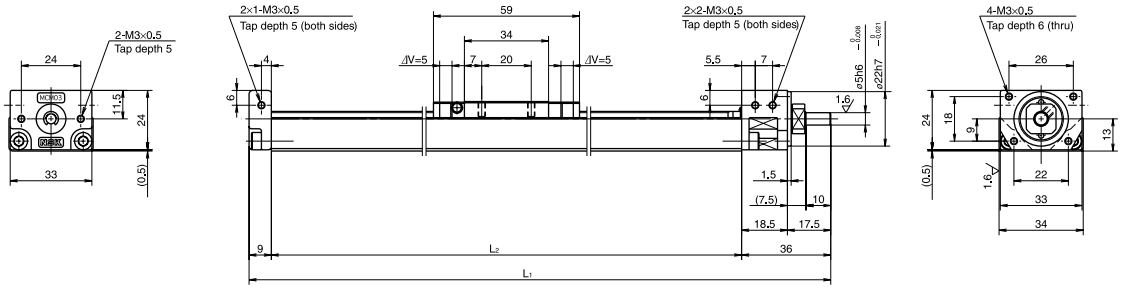

Dimension of MCM03 (Single Slider)

Reference number	Nominal stroke (mm)	Stroke limit (mm) (K1™ is not equipped)	Ball screw lead (mm)	Body length (mm)				No. of mounting holes	Inertia ×10^{-5} (kg・m^2)	Mass (kg)
				L_1	L_2	G	L_3	n		
MCM03005P01K00	50	56 (66)	1	160	115	17.5	80	2	0.015	0.6
*MCM03005P02K00			2						0.016	
*MCM03010P01K00	100	131 (141)	1	235	190	15.0	160	5	0.021	0.7
MCM03010P02K00			2						0.022	
MCM03015P01K00	150	181 (191)	1	285	240	20.0	200	6	0.025	0.8
MCM03015P02K00			2						0.026	

Bolt hole pitch L_3 on the items marked with * is 80 mm.

Monocarrier dynamic torque specification (N・cm)		
Ball screw lead (mm)	1	0.2 - 1.7
	2	

1. Frictional resistance of NSK K1™ Lubrication Unit is included in the dynamic torque in the table.
2. Grease is packed into the ball screw, linear guide parts and support unit.
3. Consult NSK for life estimates under large moment loads.
4. Optional spacer is required when cover unit or sensor unit for MCM03 with the lead of 1 or 2mm.

Basic Load Rating

Lead	Shaft dia	Basic dynamic load rating (N)				Basic static load rating (N)		Support unit Load limit (N)
ℓ (mm)	d (mm)	Ball screw C_a	Linear guides C	Support unit C_a	Rated running distance L_a (km)	Ball screw C_{0a}	Linear guides C_0	
1	Ø6	735	10,900	2,670	1	1,230	4,900	1,040
2		735	8,650		2			

Basic Static Moment Load of Linear Guide

Slider	Basic static moment load (N・m)		
	Rolling M_{R0}	Pitching M_{P0}	Yawing M_{Y0}
Single	68	28	28

MCM03

Accuracy Grade: High Grade (H)

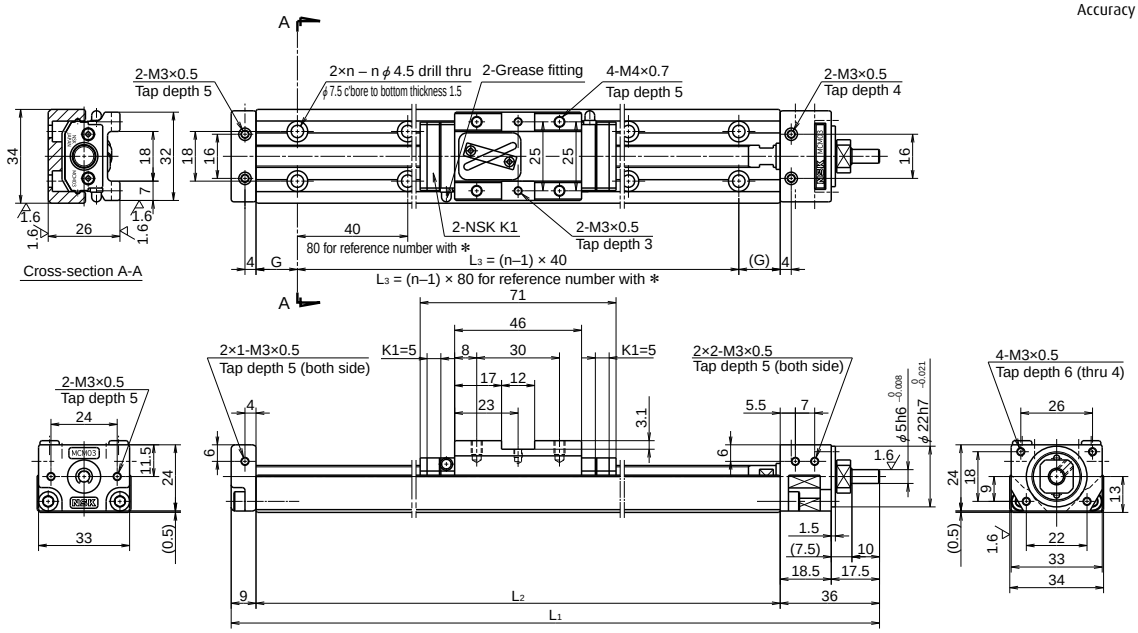

Dimension of MCM03 (Single Slider)

Reference number	Nominal stroke (mm)	Stroke limit (mm) (without K1™)	Ball screw lead (mm)	Body length (mm)				No. of mounting holes	Inertia ×10⁻⁵ (kg・m²)	Mass (kg)
				L_1	L_2	G	L_3	n		
*MCM03005H05K00	50	69 (79)	5	185	140	30	80	2	0.057	0.6
*MCM03005H10K00			10						0.080	
*MCM03005H12K00			12						0.097	
MCM03010H05K00	100	119 (129)	5	235	190	15	160	5	0.073	0.7
MCM03010H10K00			10						0.092	
MCM03010H12K00			12						0.109	
MCM03015H05K00	150	169 (179)	5	285	240	20	200	6	0.089	0.8
MCM03015H10K00			10						0.105	
MCM03015H12K00			12						0.122	
MCM03020H05K00	200	219 (229)	5	335	290	25	240	7	0.104	0.9
MCM03020H10K00			10						0.118	
MCM03020H12K00			12						0.135	
MCM03025H05K00	250	269 (279)	5	385	340	30	280	8	0.120	1.0
MCM03025H10K00			10						0.131	
MCM03025H12K00			12						0.147	

Note: Bolt hole pitch L_3 on items marked with * is 80 mm.

Monocarrier dynamic torque specification (N・cm)		
Ball screw lead (mm)	5	0.2 - 2.5
	10	0.3 - 3.0
	12	

1. Frictional resistance of NSK K1™ Lubrication Unit is included in the dynamic torque in the table.
2. Grease is packed into the ball screw, linear guide parts and support unit.
3. Consult NSK for life estimates under large moment loads.

Basic Load Rating

Lead	Shaft dia	Basic dynamic load rating (N)				Basic static load rating (N)		Support unit Load limit (N)
ℓ (mm)	d (mm)	Ball screw C_a	Linear guides C	Support unit C_a	Rated running distance L_a (km)	Ball screw C_{0a}	Linear guides C_0	
5	Ø8	1,810	7,850	2,670	5	2,880	6,620	1,040
10		1,230	6,250		10	1,690		
12			5,880		12			

Basic Static Moment Load of Linear Guide

Slider	Basic static moment load (N・m)		
	Rolling M_{R0}	Pitching M_{P0}	Yawing M_{Y0}
Single	92	51	51

MCM03

Accuracy Grade: High Grade (H)

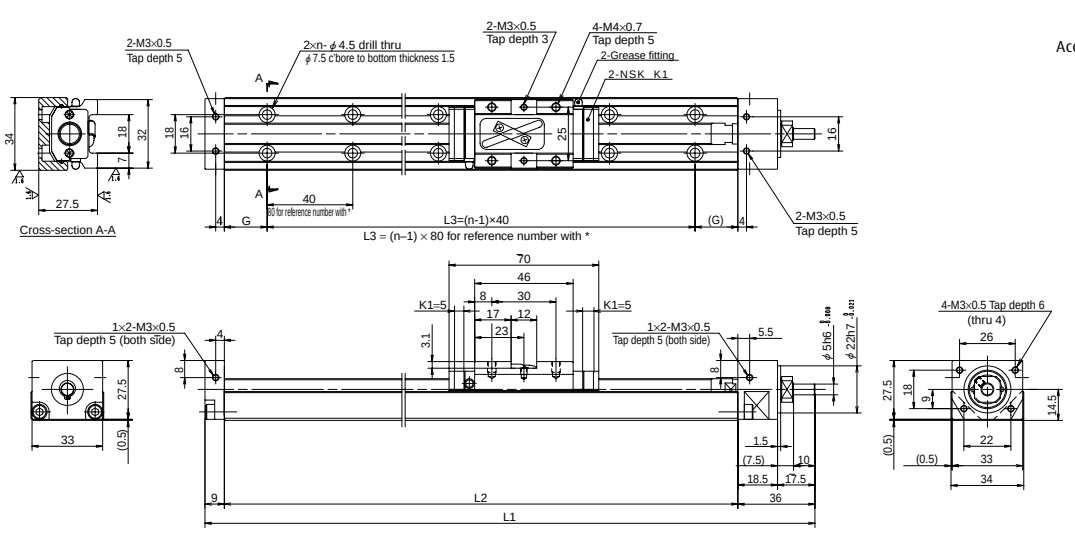

Dimension of MCM03 (Single Slider)

Reference number	Nominal stroke (mm)	Stroke limit (mm) (without K1™)	Ball screw lead (mm)	Ball screw diameter (mm)	Body length (mm)				No. of mounting holes	Inertia ×10⁻⁴ (kg・m²)	Mass (kg)
					L_1	L_2	G	L_3	n		
*MCM03005H15K00	50	70 (80)			185	140	30	80	2	0.183	0.67
MCM03010H15K00	100	120 (130)			235	190	15	160	5	0.222	0.77
MCM03015H15K00	150	170 (180)	15	Ø10	285	240	20	200	6	0.260	0.87
MCM03020H15K00	200	220 (230)			335	290	25	240	7	0.298	0.97
MCM03025H15K00	250	270 (280)			385	340	30	280	8	0.336	1.07

Bolt hole pitch L_3 on the items marked with * is 80 mm.

Monocarrier dynamic torque specification (N・cm)		
Ball screw lead (mm)	15	0.3 - 5.6

1. Frictional resistance of NSK K1 is included in dynamic torque in table.
2. Grease is packed into ball screw, linear guide parts and support unit.
3. Consult NSK for life estimates under large moment loads.
4. When a cover unit is added, an optional spacer plate is required.

Basic Load Rating

Lead	Shaft dia	Basic dynamic load rating (N)				Basic static load rating (N)		Support unit Load limit (N)
ℓ (mm)	d (mm)	Ball screw C_a	Linear guides C	Support unit C_a	Rated running distance L_a (km)	Ball screw C_{0a}	Linear guides C_0	
15	Ø10	1,760	5,440	2,670	15	2,680	6,620	1,040

Basic Static Moment Load of Linear Guide

Slider	Basic static moment load (N・m)		
	Rolling M_{R0}	Pitching M_{P0}	Yawing M_{Y0}
Single	92	51	51

MCM05

Accuracy Grade: High Grade (H)

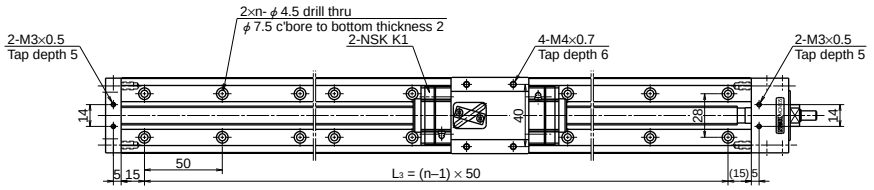

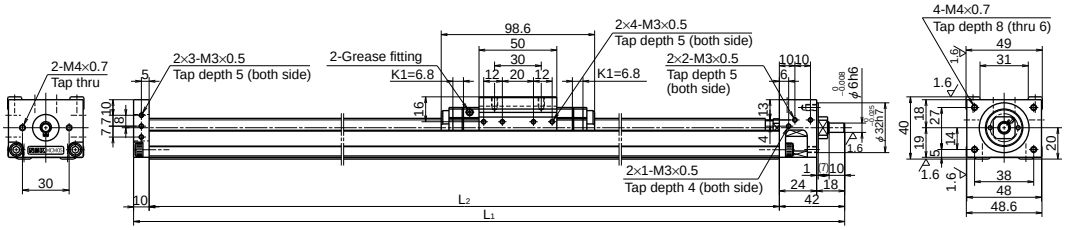

Dimension of MCM05 (Single Slider)

Reference number	Nominal stroke (mm)	Stroke limit (mm) (without K1™)	Ball screw lead (mm)	Body length (mm)			No. of mounting holes	Inertia ×10⁻⁴ (kg・m²)	Mass (kg)
				L_1	L_2	L_3	n		
MCM05005H05K00			5					0.025	
MCM05005H10K00	50	81 (95)	10	232	180	150	4	0.035	1.4
MCM05005H20K00			20					0.073	
MCM05010H05K00			5					0.031	
MCM05010H10K00	100	131 (145)	10	282	230	200	5	0.04	1.6
MCM05010H20K00			20					0.078	
MCM05015H05K00			5					0.036	
MCM05015H10K00	150	181 (195)	10	332	280	250	6	0.046	1.8
MCM05015H20K00			20					0.084	
MCM05020H05K00			5					0.042	
MCM05020H10K00	200	231 (245)	10	382	330	300	7	0.051	2.0
MCM05020H20K00			20					0.089	
MCM05025H05K00			5					0.047	
MCM05025H10K00	250	281 (295)	10	432	380	350	8	0.057	2.2
MCM05025H20K00			20					0.095	

Monocarrier dynamic torque specification (N・cm)		
Ball screw lead (mm)	5	1.0 - 4.8
	10	1.1 - 5.8
	20	1.6 - 7.9
	30	1.8 - 11.1

1. Frictional resistance of NSK K1™ is included in dynamic torque in table.
2. Grease is packed into ball screw, linear guide parts and support unit.
3. Consult NSK for life estimates under large moment loads.

Basic Load Rating

Lead	Shaft dia	Basic dynamic load rating (N)				Basic static load rating (N)		Support unit Load limit (N)
ℓ (mm)	d (mm)	Ball screw C_a	Linear guides C	Support unit C_a	Rated running distance L_a (km)	Ball screw C_{0a}	Linear guides C_0	
5	Ø12	3,760	15,600	4,400	5	6,310	10,900	1,450
10		2,420	12,400		10	3,790		
20		2,420	9,850		20	3,790		
30		3,260	8,600	6,550	30	5,400		2,730

Basic Static Moment Load of Linear Guide

Slider	Basic static moment load (N・m)		
	Rolling M_{R0}	Pitching M_{P0}	Yawing M_{Y0}
Single	229	89	89

MCM05

Accuracy grade: High grade (H)

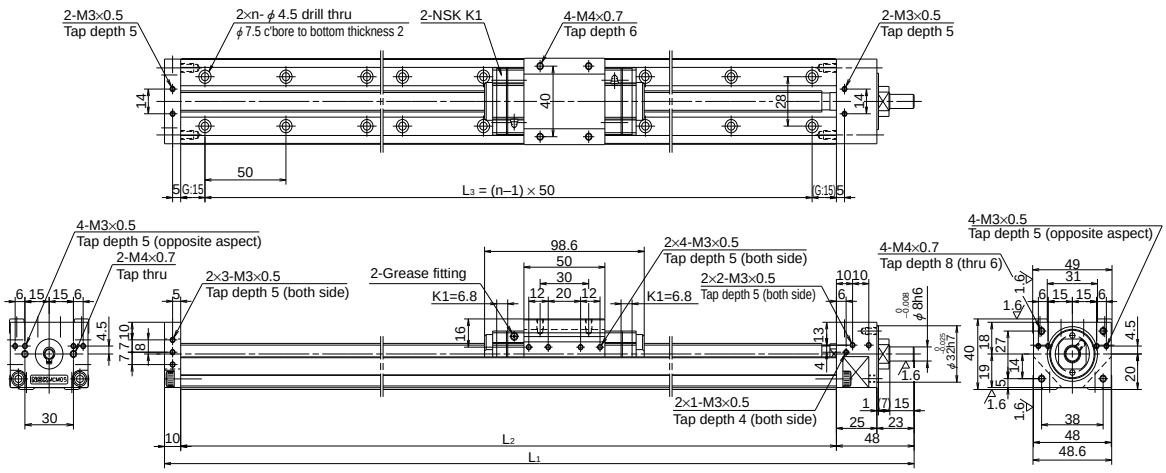

Dimension of MCM05 (Single Slider)

Reference number	Nominal stroke (mm)	Stroke limit (mm) (without K1™)	Ball screw lead (mm)	Body length (mm)			No. of mounting holes	Inertia ×10⁻⁴ (kg・m²)	Mass (kg)
				L_1	L_2	L_3	n		
MCM05030H05K00	300	331 (345)	5	482	430	400	9	0.053	2.3
MCM05030H10K00			10					0.063	
MCM05030H20K00			20					0.101	
MCM05030H30K00			30	488				0.164	
MCM05040H05K00	400	431 (445)	5	582	530	500	11	0.064	2.7
MCM05040H10K00			10					0.074	
MCM05040H20K00			20					0.112	
MCM05040H30K00			30	588				0.175	2.8
MCM05050H05K00	500	531 (545)	5	682	630	600	13	0.076	3.1
MCM05050H10K00			10					0.085	
MCM05050H20K00			20					0.123	
MCM05050H30K00			30	688				0.186	3.2
MCM05060H05K00	600	631 (645)	5	782	730	700	15	0.087	3.5
MCM05060H10K00			10					0.096	
MCM05060H20K00			20					0.134	
MCM05060H30K00			30	788				0.198	3.6

Monocarrier dynamic torque specification (N・cm)		
Ball screw lead (mm)	5	1.0 - 4.8
	10	1.1 - 5.8
	20	1.6 - 7.9
	30	1.8 - 11.1

1. Frictional resistance of NSK K1™ is included in dynamic torque in table.
2. Grease is packed into ball screw, linear guide parts and support unit.
3. Consult NSK for life estimates under large moment loads.

Basic Load Rating

Lead	Shaft dia	Basic dynamic load rating (N)				Basic static load rating (N)		Support unit Load limit (N)
ℓ (mm)	d (mm)	Ball screw C_a	Linear guides C	Support unit C_a	Rated running distance L_a (km)	Ball screw C_{0a}	Linear guides C_0	
5	Ø12	3,760	15,600	4,400	5	6,310	10,900	1,450
10		2,420	12,400		10	3,790		
20		2,420	9,850		20	3,790		
30		3,260	8,600	6,550	30	5,400		2,730

Basic Static Moment Load of Linear Guide

Slider	Basic static moment load (N・m)		
	Rolling M_{R0}	Pitching M_{P0}	Yawing M_{Y0}
Single	229	89	89

MCM05 (Double Slider)

Accuracy Grade: High Grade (H)

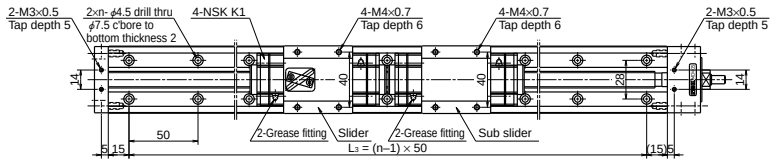

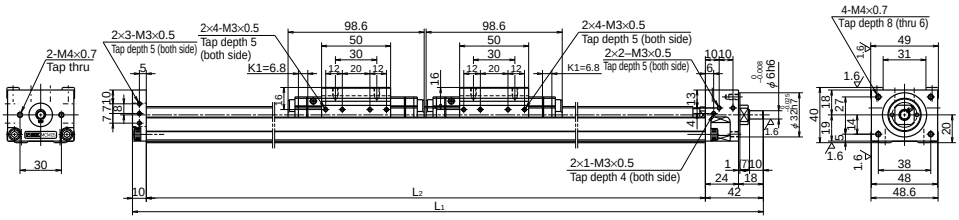

Dimension of MCM05 (Double Slider)

Reference number	Nominal stroke (mm)	Stroke limit (mm) (K1™ is not equipped)	Ball screw lead (mm)	Body length (mm)			No. of mounting holes	Inertia ×10⁻⁴ (kg・m²)	Mass (kg)
				L_1	L_2	L_3	n		
MCM05006H10D00	60	83 (110)	10	332	280	250	6	0.058	2.3
MCM05011H10D00	110	133 (160)	10	382	330	300	7	0.064	2.5
MCM05016H10D00	160	183 (210)	10	432	380	350	8	0.070	2.7
MCM05021H10D00	210	232 (260)	10	482	430	400	9	0.075	2.8
MCM05021H20D00			20					0.151	
MCM05031H10D00	310	332 (360)	10	582	530	500	11	0.086	3.2
MCM05031H20D00			20					0.162	
MCM05041H10D00	410	432 (460)	10	682	630	600	13	0.098	3.6
MCM05041H20D00			20					0.174	
MCM05051H10D00	510	532 (560)	10	782	730	700	15	0.109	4.2
MCM05051H20D00			20					0.185	

Monocarrier dynamic torque specification (N・cm)		
Ball screw lead (mm)	10	1.5 - 7.6
	20	2.3 - 11.8

1. Frictional resistance of NSK K1™ Lubrication Unit is included in the dynamic torque in the table.
2. Grease is packed into the ball screw, linear guide parts and support unit.
3. Consult NSK for life estimates under large moment loads.

Basic Load Rating

Lead	Shaft dia	Basic dynamic load rating (N)				Basic static load rating (N)		Support unit Load limit (N)
ℓ (mm)	d (mm)	Ball screw C_a	Linear guides C	Support unit C_a	Rated running distance L_a (km)	Ball screw C_{0a}	Linear guides C_0	
5	Ø12	3,760	15,600	4,400	5	6,310	10,900	1,450
10		2,420	12,400		10	3,790		
20		2,420	9,850		20	3,790		

Basic Static Moment Load of Linear Guide

Slider	Basic static moment load (N・m)		
	Rolling M_{R0}	Pitching M_{P0}	Yawing M_{Y0}
Double	455	765	765

MCM06

Accuracy Grade: High grade (H)

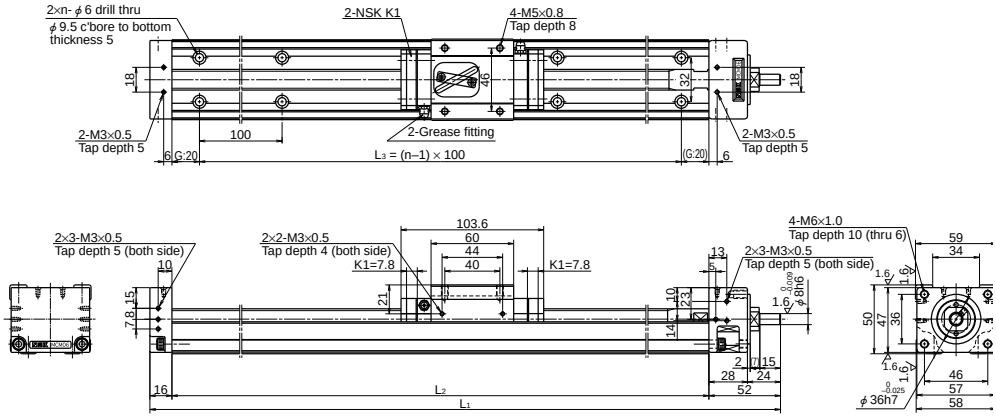

Dimension of MCM06 (Single slider)

Reference number	Nominal stroke (mm)	Stroke limit (mm) (without K1™)	Ball screw lead (mm)	Body length (mm)			No. of mounting holes	Inertia ×10⁻⁴ (kg・m²)	Mass (kg)
				L_1	L_2	L_3	n		
*MCM06005H05K02			5					0.066	
*MCM06005H10K00	50	86 (102)	10	258	190	100	2	0.077	2.7
*MCM06005H20K00			20					0.122	
MCM06010H05K02			5					0.080	
MCM06010H10K00	100	136 (152)	10	308	240	200	3	0.092	3.0
MCM06010H20K00			20					0.137	
*MCM06015H05K02			5					0.095	
*MCM06015H10K00	150	186 (202)	10	358	290	200	3	0.106	3.5
*MCM06015H20K00			20					0.152	
MCM06020H05K02			5					0.110	
MCM06020H10K00	200	236 (252)	10	408	340	300	4	0.121	3.8
MCM06020H20K00			20					0.167	
*MCM06025H05K02			5					0.125	
*MCM06025H10K00	250	286 (302)	10	458	390	300	4	0.136	4.2
*MCM06025H20K00			20					0.181	
MCM06030H05K02			5					0.139	
MCM06030H10K00	300	336 (352)	10	508	440	400	5	0.150	4.5
MCM06030H20K00			20					0.196	

Notes: 1). Dimension G is 45 for items marked with *.
2). The nominal number in the above table is for high-grade grease specifications. In the case of other specifications, see the following table for the 13th and 14th digits.

Coding for columns 13 and 14

Grease	Lead	High-grade, precision-grade
Standard	5	02
	10, 20	00
LG2	5	B2
	10, 20	B0

Monocarrier dynamic torque specification (N・cm)		
Ball screw lead (mm)	5	1.9 - 7.4
	10	2.2 - 8.6
	20	2.8 - 11.0

1. Frictional resistance of NSK K1™ Lubrication Unit is included in the dynamic torque in the table.
2. Grease is packed into the ball screw, linear guide parts and support unit.
3. Consult NSK for life estimates under large moment loads.

Basic Load Rating

Lead	Shaft dia	Basic dynamic load rating (N)				Basic static load rating (N)		Support unit Load limit (N)
ℓ (mm)	d (mm)	Ball screw C_a	Linear guides C	Support unit C_a	Rated running distance L_a (km)	Ball screw C_{0a}	Linear guides C_0	
5	Ø15	7,070	25,200	6,550	5	12,800	17,000	2,730
10		7,070	20,000		10	12,800		
20		4,560	15,900		20	7,730		

Basic Static Moment Load of Linear Guide

Slider	Basic static moment load (N・m)		
	Rolling M_{R0}	Pitching M_{P0}	Yawing M_{Y0}
Single	415	174	174

MCM06

Accuracy Grade: High Grade (H)

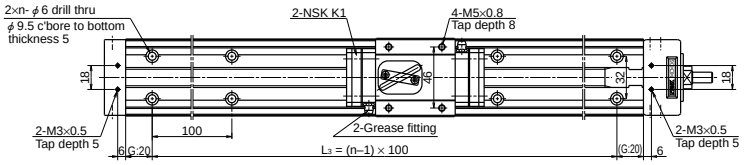

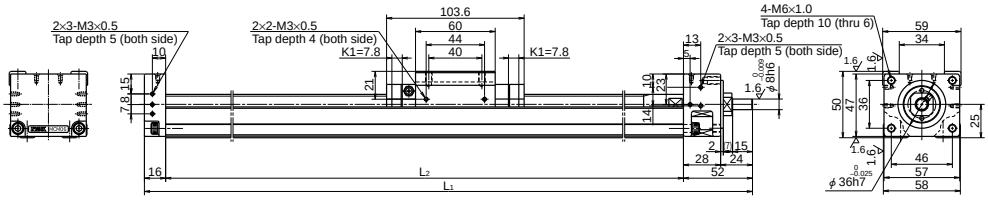

Dimension of MCM06 (Single Slider)

Reference number	Nominal stroke (mm)	Stroke limit (mm) (without K1™)	Ball screw lead (mm)	Body length (mm)			No. of mounting holes	Inertia ×10⁻⁴ (kg・m²)	Mass (kg)
				L_1	L_2	L_3	n		
MCM06040H05K02			5					0.169	
MCM06040H10K00	400	436 (452)	10	608	540	500	6	0.180	5.2
MCM06040H20K00			20					0.225	
MCM06050H05K02			5					0.198	
MCM06050H10K00	500	536 (552)	10	708	640	600	7	0.209	6.0
MCM06050H20K00			20					0.255	
MCM06060H05K02			5					0.228	
MCM06060H10K00	600	636 (652)	10	808	740	700	8	0.239	6.7
MCM06060H20K00			20					0.284	
MCM06070H05K02			5					0.257	
MCM06070H10K00	700	736 (752)	10	908	840	800	9	0.268	7.4
MCM06070H20K00			20					0.314	
MCM06080H05K02			5					0.286	
MCM06080H10K00	800	836 (852)	10	1,008	940	900	10	0.298	8.1
MCM06080H20K00			20					0.343	

Note: The nominal number in the above table is for high-grade grease specifications. In the case of other specifications, see the following table for the 13th and 14th digits.

Coding for columns 13 and 14

Grease	Lead	High-grade, precision-grade
Standard	5	02
	10, 20	00
LG2	5	B2
	10, 20	B0

Monocarrier dynamic torque specification (N・cm)		
Ball screw lead (mm)	5	1.9 - 7.4
	10	2.2 - 8.6
	20	2.8 - 11.0

1. Frictional resistance of NSK K1™ Lubrication Unit is included in the dynamic torque in the table.
2. Grease is packed into the ball screw, linear guide parts and support unit.
3. Consult NSK for life estimates under large moment loads.

Basic Load Rating

Lead	Shaft dia	Basic dynamic load rating (N)				Basic static load rating (N)		Support unit Load limit (N)
ℓ (mm)	d (mm)	Ball screw C_a	Linear guides C	Support unit C_a	Rated running distance L_a (km)	Ball screw C_{0a}	Linear guides C_0	
5	Ø15	7,070	25,200	6,550	5	12,800	17,000	2,730
10		7,070	20,000		10	12,800		
20		4,560	15,900		20	7,730		

Basic Static Moment Load of Linear Guide

Slider	Basic static moment load (N・m)		
	Rolling M_{R0}	Pitching M_{P0}	Yawing M_{Y0}
Single	415	174	174

MCM06 (Double Slider)

Accuracy Grade: High Grade (H)

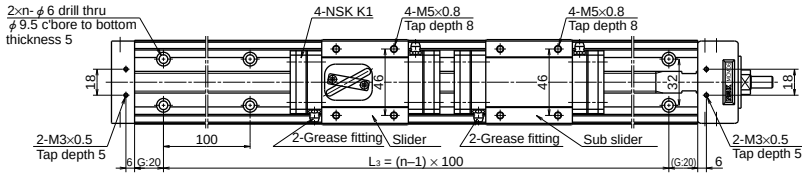

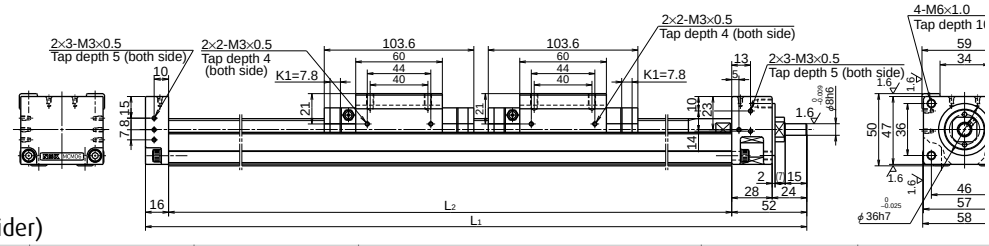

Dimension of MCM06 (Double Slider)

Reference number	Nominal stroke (mm)	Stroke limit (mm) (K1™ is not equipped)	Ball screw lead (mm)	Body length (mm)			No. of mounting holes	Inertia ×10⁻⁴ (kg・m²)	Mass (kg)
				L_1	L_2	L_3	n		
MCM06011H05D02	110	132 (164)	5	408	340	300	4	0.114	4.4
MCM06011H10D00			10					0.136	
MCM06021H05D02	210	232 (264)	5	508	440	400	5	0.143	5.1
MCM06021H10D00			10					0.166	
MCM06021H20D00			20					0.257	
MCM06031H05D02	310	332 (364)	5	608	540	500	6	0.173	5.8
MCM06031H10D00			10					0.195	
MCM06031H20D00			20					0.286	
MCM06041H05D02	410	432 (464)	5	708	640	600	7	0.202	6.6
MCM06041H10D00			10					0.224	
MCM06041H20D00			20					0.316	
MCM06051H10D02	510	532 (564)	10	808	740	700	8	0.254	7.3
MCM06051H20D00			20					0.345	
MCM06061H10D02	610	632 (664)	10	908	840	800	9	0.283	8.0
MCM06061H20D00			20					0.375	
MCM06071H10D02	710	732 (764)	10	1,008	940	900	10	0.313	8.7
MCM06071H20D00			20					0.404	

Note: The nominal number in the above table is for high-grade grease specifications. In the case of other specifications, see the following table for the 13th and 14th digits.

Coding for columns 13 and 14

Grease	Lead	High-grade, precision-grade
Standard	5	02
	10, 20	00
LG2	5	B2
	10, 20	B0

Monocarrier dynamic torque specification (N・cm)		
Ball screw lead (mm)	5	2.3 - 8.5
	10	2.7 - 10.9
	20	4.0 - 15.9

1. Frictional resistance of NSK K1™ Lubrication Unit is included in the dynamic torque in the table.
2. Grease is packed into the ball screw, linear guide parts and support unit.
3. Consult NSK for life estimates under large moment loads.

Basic Load Rating

Lead	Shaft dia	Basic dynamic load rating (N)				Basic static load rating (N)		Support unit Load limit (N)
ℓ (mm)	d (mm)	Ball screw C_a	Linear guides C	Support unit C_a	Rated running distance L_a (km)	Ball screw C_{0a}	Linear guides C_0	
5	Ø15	7,070	25,200	6,550	5	12,800	17,000	2,730
10		7,070	20,000		10	12,800		
20		4,560	15,900		20	7,730		

Basic Static Moment Load of Linear Guide

Slider	Basic static moment load (N・m)		
	Rolling M_{R0}	Pitching M_{P0}	Yawing M_{Y0}
Double	825	1,220	1,220

MCM08

Accuracy Grade: High Grade (H)

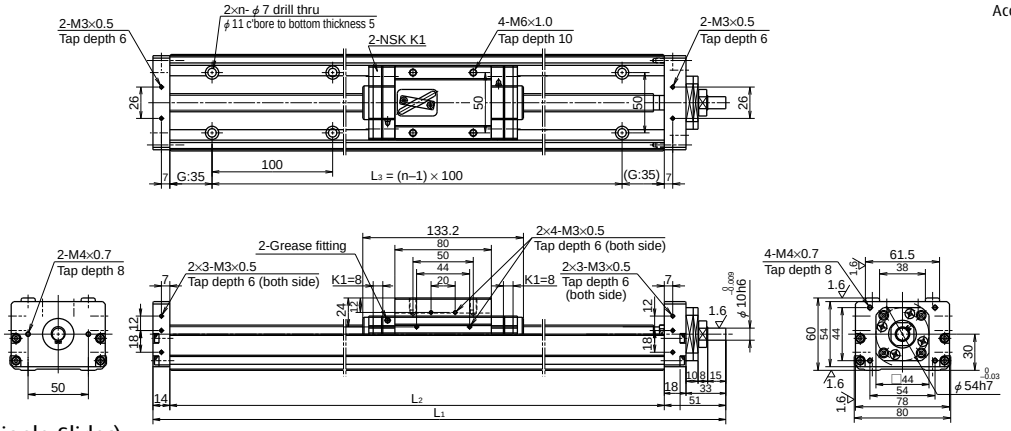

Dimension of MCM08 (Single Slider)

Reference number	Nominal stroke (mm)	Stroke limit (mm) (without K1™)	Ball screw lead (mm)	Body length (mm)			No. of mounting holes	Inertia ×10⁻⁴ (kg・m²)	Mass (kg)
				L_1	L_2	L_3	n		
*MCM08005H05K02	50	86 (102)	5	285	220	100	2	0.082	4.1
*MCM08005H10K00			10					0.100	
MCM08010H05K02			5					0.097	
MCM08010H10K00	100	136 (152)	10	335	270	200	3	0.114	4.6
MCM08010H20K00			20					0.190	
*MCM08015H05K02			5					0.111	
*MCM08015H10K00	150	186 (202)	10	385	320	200	3	0.129	5.1
*MCM08015H20K00			20					0.205	
MCM08020H05K02			5					0.126	
MCM08020H10K00	200	236 (252)	10	435	370	300	4	0.144	5.5
MCM08020H20K00			20					0.220	
*MCM08025H05K02			5					0.141	
*MCM08025H10K00	250	286 (302)	10	485	420	300	4	0.159	6.0
*MCM08025H20K00			20					0.235	
MCM08030H05K02			5					0.156	
MCM08030H10K00	300	336 (352)	10	535	470	400	5	0.173	6.5
MCM08030H20K00			20					0.249	

Notes: 1). Dimension G is 45 for items marked with *.
2). The nominal number in the above table is for high-grade grease specifications. In the case of other specifications, see the following table for the 13th and 14th digits.

Coding for columns 13 and 14

Grease	Lead	High-grade, precision-grade
Standard	5	02
	10, 20	00
LG2	5	B2
	10, 20	B0

Monocarrier dynamic torque specification (N・cm)		
Ball screw lead (mm)	5	1.0 - 5.9
	10	2.0 - 7.8
	20	2.5 - 10.8
	30	2.8 - 12.0

1. Frictional resistance of NSK K1™ Lubrication Unit is included in the dynamic torque in the table.
2. Grease is packed into the ball screw, linear guide parts and support unit.
3. Consult NSK for life estimates under large moment loads.

Basic Load Rating

Lead	Shaft dia	Basic dynamic load rating (N)				Basic static load rating (N)		Support unit Load limit (N)
ℓ (mm)	d (mm)	Ball screw C_a	Linear guides C	Support unit C_a	Rated running distance L_a (km)	Ball screw C_{0a}	Linear guides C_0	
5	Ø15	7,070	30,800	7,100	5	12,800	22,800	3,040
10		7,070	24,400		10	12,800		
20		4,560	19,400		20	7,730		
30		5,070	16,930		30	8,730		

Basic Static Moment Load of Linear Guide

Slider	Basic static moment load (N・m)		
	Rolling M_{R0}	Pitching M_{P0}	Yawing M_{Y0}
Single	770	300	300

MCM08

Accuracy grade: High grade (H)

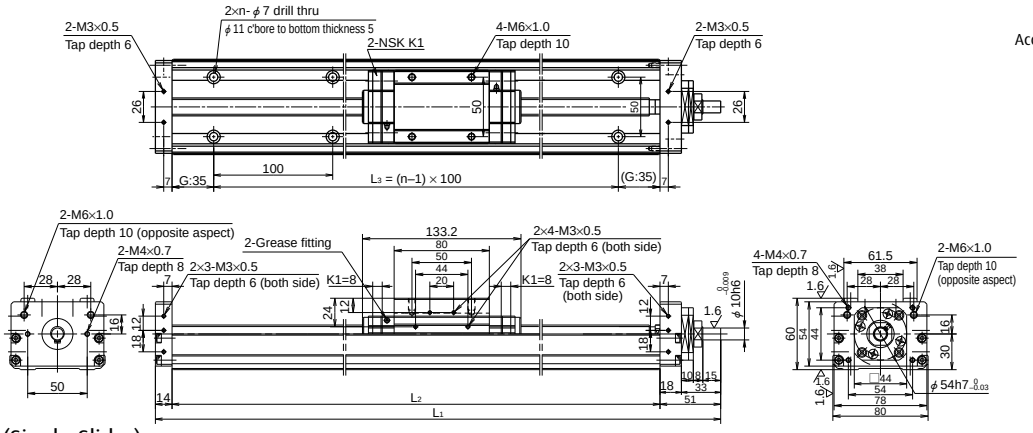

Dimension of MCM08 (Single Slider)

Reference number	Nominal stroke (mm)	Stroke limit (mm) (without K1™)	Ball screw lead (mm)	Body length (mm)			No. of mounting holes	Inertia ×10⁻⁴ (kg・m²)	Mass (kg)
				L_1	L_2	L_3	n		
MCM08040H05K02	400	436 (452)	5	635	570	500	6	0.185	7.4
MCM08040H10K00			10					0.203	
MCM08040H20K00			20					0.279	
MCM08040H30K00			30					0.405	
MCM08050H05K02	500	536 (552)	5	735	670	600	7	0.214	8.4
MCM08050H10K00			10					0.232	
MCM08050H20K00			20					0.308	
MCM08050H30K00			30					0.435	
MCM08060H05K02	600	635 (652)	5	835	770	700	8	0.244	9.3
MCM08060H10K00			10					0.262	
MCM08060H20K00			20					0.338	
MCM08060H30K00			30					0.464	
MCM08070H05K02	700	736 (752)	5	935	870	800	9	0.273	10.5
MCM08070H10K00			10					0.291	
MCM08070H20K00			20					0.367	
MCM08070H30K00			30					0.494	
MCM08080H05K02	800	836 (852)	5	1,035	970	900	10	0.303	11.2
MCM08080H10K00			10					0.320	
MCM08080H20K00			20					0.396	

Note: The nominal number in the above table is for high-grade grease specifications. In the case of other specifications, see the following table for the 13th and 14th digits.

Coding for columns 13 and 14

Grease	Lead	High-grade, precision-grade
Standard	5	02
	10, 20	00
LG2	5	B2
	10, 20	B0

Monocarrier dynamic torque specification (N・cm)		
Ball screw lead (mm)	5	1.0 - 5.9
	10	2.0 - 7.8
	20	2.5 - 10.8
	30	2.8 - 12.0

1. Frictional resistance of NSK K1™ Lubrication Unit is included in the dynamic torque in the table.
2. Grease is packed into the ball screw, linear guide parts and support unit.
3. Consult NSK for life estimates under large moment loads.

Basic Load Rating

Lead	Shaft dia	Basic dynamic load rating (N)				Basic static load rating (N)		Support unit Load limit (N)
ℓ (mm)	d (mm)	Ball screw C_a	Linear guides C	Support unit C_a	Rated running distance L_a (km)	Ball screw C_{0a}	Linear guides C_0	
5	Ø15	7,070	30,800	7,100	5	12,800	22,800	3,040
10		7,070	24,400		10	12,800		
20		4,560	19,400		20	7,730		
30		5,070	16,930		30	8,730		

Basic Static Moment Load of Linear Guide

Slider	Basic static moment load (N・m)		
	Rolling M_{R0}	Pitching M_{P0}	Yawing M_{Y0}
Single	770	300	300

MCM08 (Double Slider)

Accuracy Grade: High Grade (H)

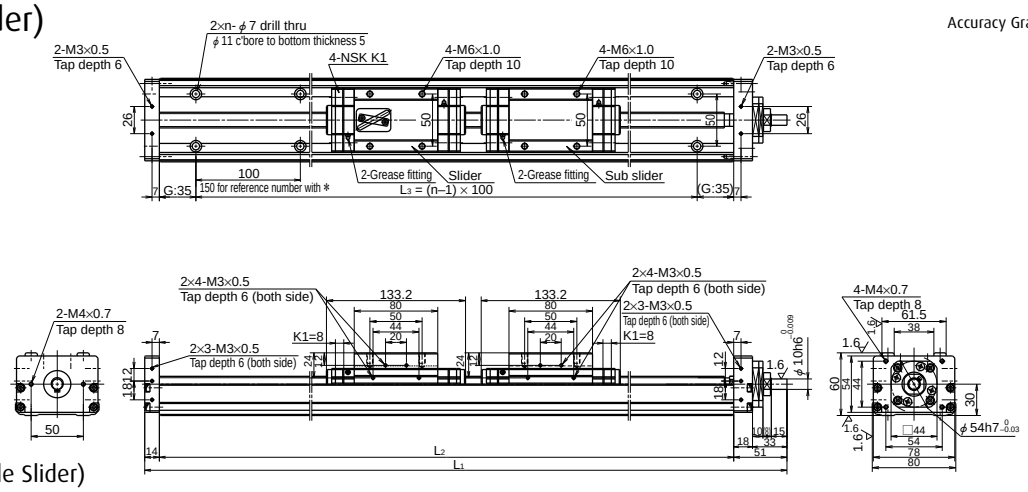

Dimension of MCM08 (Double Slider)

Reference number	Nominal stroke (mm)	Stroke limit (mm) (K1™ is not equipped)	Ball screw lead (mm)	Body length (mm)			No. of mounting holes	Inertia ×10⁻⁴ (kg・m²)	Mass (kg)
				L_1	L_2	L_3	n		
*MCM08008H10D00	80	103 (135)	10	435	370	300	3	0.169	6.5
MCM08018H10D00	180	203 (235)	10	535	470	400	5	0.199	7.5
MCM08018H20D00			20					0.351	
MCM08028H10D00	280	303 (335)	10	635	570	500	6	0.228	8.4
MCM08028H20D00			20					0.380	
MCM08038H10D00	380	403 (435)	10	735	670	600	7	0.257	9.4
MCM08038H20D00			20					0.409	
MCM08048H10D00	480	503 (535)	10	835	770	700	8	0.287	10.3
MCM08048H20D00			20					0.439	
MCM08058H10D00	580	603 (635)	10	935	870	800	9	0.316	11.5
MCM08058H20D00			20					0.468	
MCM08068H10D00	680	703 (735)	10	1,035	970	900	10	0.346	12.2
MCM08068H20D00			20					0.498	

Bolthole pitch L_3 on item marked with * is 150mm.

Monocarrier dynamic torque specification (N・cm)		
Ball screw lead (mm)	10	2.5 - 10.8
	20	4.0 - 17.2

1. Frictional resistance of NSK K1™ Lubrication Unit is included in the dynamic torque in the table.
2. Grease is packed into the ball screw, linear guide parts and support unit.
3. Consult NSK for life estimates under large moment loads.

Basic Load Rating

ℓ Lead	Shaft dia	Basic dynamic load rating (N)				Basic static load rating (N)		Support unit Load limit (N)
(mm)	d (mm)	Ball screw C_a	Linear guides C	Support unit C_a	Rated running distance L_a (km)	Ball screw C_{0a}	Linear guides C_0	
10	Ø15	7,070	24,400	7100	10	12,800		
20		4,560	19,400		20	7,730		

Basic Static Moment Load of Linear Guide

Slider	Basic static moment load (N・m)		
	Rolling M_{R0}	Pitching M_{P0}	Yawing M_{Y0}
Double	1,540	2,050	2,050

MCM10

Accuracy Grade: High Grade (H)

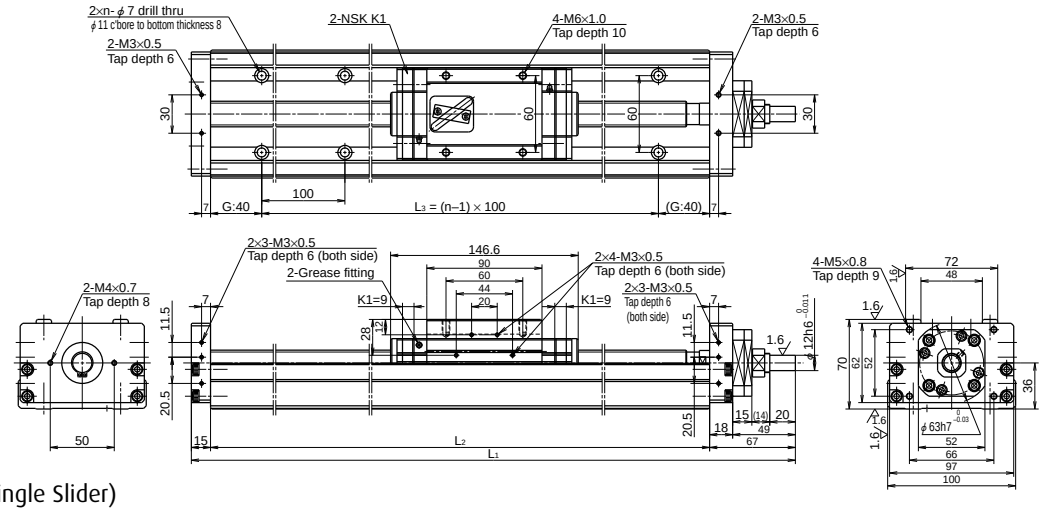

Dimension of MCM10 (Single Slider)

Reference number	Nominal stroke (mm)	Stroke limit (mm) (without K1™)	Ball screw lead (mm)	Body length (mm)			No. of mounting holes	Inertia ×10⁻⁴ (kg・m²)	Mass (kg)
				L_1	L_2	L_3	n		
MCM10010H10K00	100	133 (151)	10	362	280	200	2#	0.332	7.8
MCM10010H20K00			20					0.446	
*MCM10015H10K00	150	183 (201)	10	412	330	300	4	0.378	8.7
*MCM10015H20K00			20					0.492	
MCM10020H10K00	200	233 (251)	10	462	380	300	4	0.425	9.5
MCM10020H20K00			20					0.539	
*MCM10025H10K00	250	283 (301)	10	512	430	400	5	0.472	10.4
*MCM10025H20K00			20					0.586	
MCM10030H10K00	300	333 (351)	10	562	480	400	5	0.519	11.2
MCM10030H20K00			20					0.633	
MCM10040H10K00	400	433 (451)	10	662	580	500	6	0.612	13.0
MCM10040H20K00			20					0.726	
MCM10050H10K00			10					0.706	
MCM10050H20K00	500	533 (551)	20	762	680	600	7	0.820	14.6
MCM10050H30K00			30					1.010	

Note: 1) Dimension G is 15 for items marked with *.
2) #: Use mounting holes on each end of the rail.

Monocarrier dynamic torque specification (N・cm)		
Ball screw lead (mm)	10	2.7 - 10.8
	20	3.1 - 12.7
	30	5.1 - 18.0

1. Frictional resistance of NSK K1™ Lubrication Unit is included in the dynamic torque in the table.
2. Grease is packed into the ball screw, linear guide parts and support unit.
3. Consult NSK for life estimates under large moment loads.

Basic Load Rating

Lead	Shaft dia	Basic dynamic load rating (N)				Basic static load rating (N)		Support unit Load limit (N)
ℓ (mm)	d (mm)	Ball screw C_a	Linear guides C	Support unit C_a	Rated running distance L_a (km)	Ball screw C_{0a}	Linear guides C_0	
10	Ø20	11,000	33,500	7,600	10	21,100	29,400	3,380
20		7,060	26,600		20	12,700		
30		11,700	23,200		30	22,700		

Basic Static Moment Load of Linear Guide

Slider	Basic static moment load (N・m)		
	Rolling M_{R0}	Pitching M_{P0}	Yawing M_{Y0}
Single	1,170	425	425

MCM10

Accuracy Grade: High Grade (H)

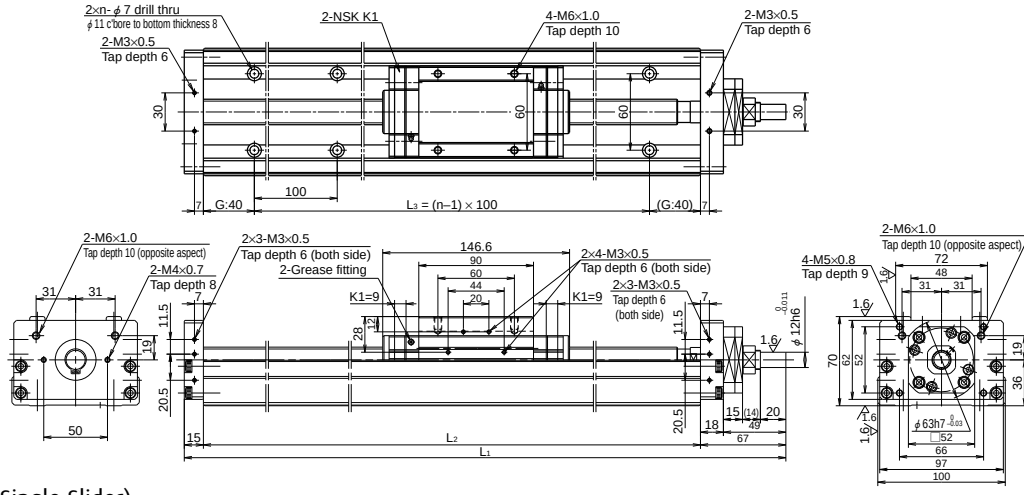

Dimension of MCM10 (Single Slider)

Reference number	Nominal stroke (mm)	Stroke limit (mm) (without K1™)	Ball screw lead (mm)	Body length (mm)			No. of mounting holes	Inertia ×10⁻⁴ (kg・m²)	Mass (kg)
				L_1	L_2	L_3	n		
MCM10060H10K00			10					0.800	
MCM10060H20K00	600	633 (651)	20	862	780	700	8	0.914	16.3
MCM10060H30K00			30					1.104	
MCM10070H10K00			10					0.893	
MCM10070H20K00	700	733(751)	20	962	880	800	9	1.007	18.0
MCM10070H30K00			30					1.197	
MCM10080H10K00			10					0.987	
MCM10080H20K00	800	833 (851)	20	1,062	980	900	10	1.101	19.7
MCM10080H30K00			30					1.291	
MCM10090H10K00	900	933 (951)	10	1,162	1,080	1,000	11	1.081	21.4
MCM10090H20K00			20					1.195	
※ MCM10100H10K00	1,000	1033 (1,051)	10	1,262	1,180	1,000	11	1.174	23.1
※ MCM10100H20K00			20					1.288	

Note: Dimension G is 90 for items marked with ※.

Monocarrier dynamic torque specification (N・cm)		
Ball screw lead (mm)	10	2.7 - 10.8
	20	3.1 - 12.7
	30	5.1 - 18.0

1. Frictional resistance of NSK K1 is included in dynamic torque in table.
2. Grease is packed into ball screw, linear guide parts and support unit.
3. Consult NSK for life estimates under large moment loads.

Basic Load Rating

Lead	Shaft dia	Basic dynamic load rating (N)				Basic static load rating (N)		Support unit Load limit (N)
ℓ (mm)	d (mm)	Ball screw C_a	Linear guides C	Support unit C_a	Rated running distance L_a (km)	Ball screw C_{0a}	Linear guides C_0	
10	Ø20	11,000	33,500	7,600	10	21,100	29,400	3,380
20		7,060	26,600		20	12,700		
30		11,700	23,200		30	22,700		

Basic Static Moment Load of Linear Guide

Slider	Basic static moment load (N・m)		
	Rolling M_{RO}	Pitching M_{PO}	Yawing M_{YO}
Single	1,170	425	425

MCM10 (Double Slider)

Accuracy Grade: High Grade (H)

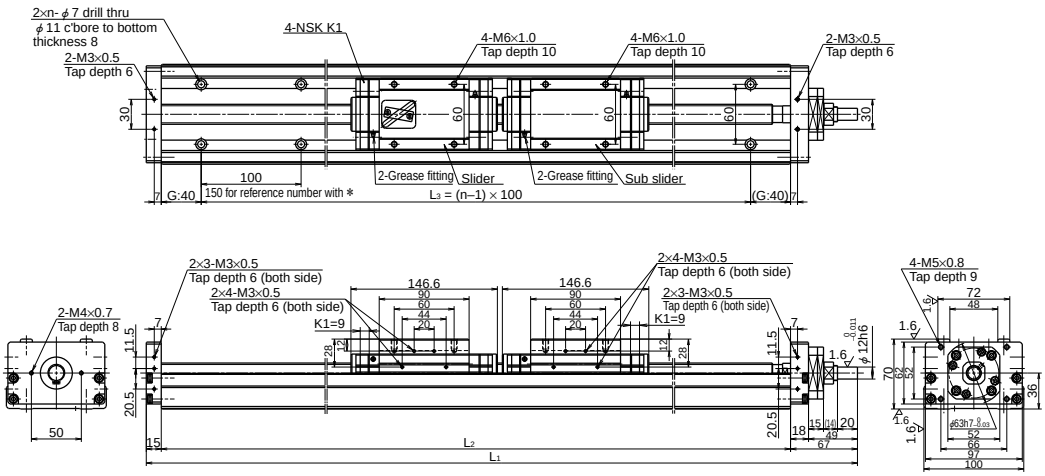

Dimension of MCM10 (Double Slider)

Reference number	Nominal stroke (mm)	Stroke limit (mm) (K1™ is not equipped)	Ball screw lead (mm)	Body length (mm)			No. of mounting holes	Inertia ×10⁻⁴ (kg・m²)	Mass (kg)
				L_1	L_2	L_3	n		
● MCM10007H10D00	70	86 (122)	10	462	380	300	3	0.463	11.0
MCM10017H10D00	170	186 (222)	10	562	480	400	5	0.557	12.7
MCM10017H20D00			20					0.785	
MCM10027H10D00	270	286 (322)	10	662	580	500	6	0.650	13.4
MCM10027H20D00			20					0.878	
MCM10037H10D00	370	386 (422)	10	762	680	600	7	0.744	15.1
MCM10037H20D00			20					0.972	
MCM10047H10D00	470	486 (522)	10	862	780	700	8	0.838	17.8
MCM10047H20D00			20					1.066	
MCM10057H10D00	570	586 (622)	10	962	880	800	9	0.931	19.5
MCM10057H20D00			20					1.159	
MCM10067H10D00	670	686 (722)	10	1,062	980	900	10	1.025	21.2
MCM10067H20D00			20					1.253	
*MCM10087H10D00	870	886 (922)	10	1,262	1,180	1,000	11	1.212	23.6
*MCM10087H20D00			20					1.440	

Dimension G is 90 for those marked with *.
Dimension (1) is 150mm for those marked with●.

Monocarrier dynamic torque specification (N・cm)		
Ball screw lead (mm)	10	4.2 - 15.6
	20	5.0 - 19.6

1. Frictional resistance of NSK K1™ Lubrication Unit is included in the dynamic torque in the table.
2. Grease is packed into the ball screw, linear guide parts and support unit.
3. Consult NSK for life estimates under large moment loads.

Basic Load Rating

Lead	Shaft dia	Basic dynamic load rating (N)				Basic static load rating (N)		Support unit Load limit (N)
ℓ (mm)	d (mm)	Ball screw C_a	Linear guides C	Support unit C_a	Rated running distance L_a (km)	Ball screw C_{0a}	Linear guides C_0	
10	Ø20	11,000	33,500	7,600	10	21,100	29,400	3,380
20		7,060	26,600		20	12,700		

Basic Static Moment Load of Linear Guide

Slider	Basic static moment load (N・m)		
	Rolling M_{R0}	Pitching M_{P0}	Yawing M_{Y0}
Double	2,340	2,940	2,940

2.3 MCM Series Optional Accessories
2.3.1 Sensor Unit

Proximity Switch

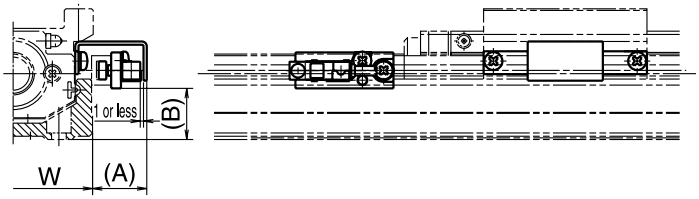

(Example of assembly)

Type		Reference Number			Dimension (A) (mm)	Dimension (B) (mm)	Body width W (mm)
MCM02		MC-SR02-00	MC-SR02-01	MC-SR02-02	17	2	28
MCM03		MC-SR03-10	MC-SR03-11	MC-SR03-12	17	3	34
MCM05		MC-SR05-10	MC-SR05-11	MC-SR05-12	17	15	48.6
MCM06		MC-SR06-10	MC-SR06-11	MC-SR06-12	17	19	58
MCM08		MC-SR08-10	MC-SR08-11	MC-SR08-12	16	27	80
MCM10		MC-SR10-10	MC-SR10-11	MC-SR10-12	16	35	100
Quantity	Proximity switch (normally open)	—	3	1	E2S-W13 (OMRON Corp.)		
	Proximity switch (normally close)	3	—	2	E2S-W14 (OMRON Corp.)		

A spacer plate is required when you use a cover unit or sensor unit for an MCM03 with a lead of 1 or 2 mm.

A sensor unit consists of sensors and sensor mounting parts.

Photo Sensor

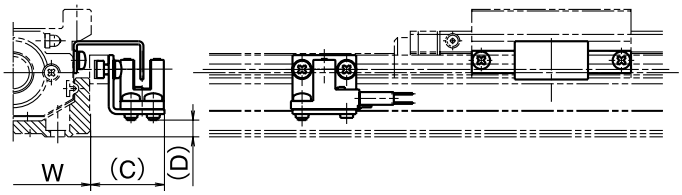

(Example of assembly)

Type	NPN Sensor* Reference Number	PNP Sensor** Reference Number	Dimension (C) (mm)	Dimension (D) (mm)	Body width W (mm)	Remarks
MCM03	MC-SR03-13	MC-SR03-40	24	0.5	34.0	* OMRON EE-SX674
MCM05	MC-SR05-13	MC-SR05-62	24	5.0	48.6	** OMRON EE-SX674P
MCM06	MC-SR06-13	MC-SR06-46	24	9.0	58.0	EE-1001 Connector
MCM08	MC-SR08-13	MC-SR08-56	23	17.0	80.0	3 Sensors & 3 Connectors
MCM10	MC-SR10-13	MC-SR10-45	22	24.0	100.0	per Ref No.

A spacer plate is required when you use a cover unit or sensor unit for an MCM03 with a lead of 1 or 2 mm.

A sensor unit consists of sensors and sensor mounting parts.

Sensor Rail

Sensor Rail for MCM03: MC-SRL3- * * * *

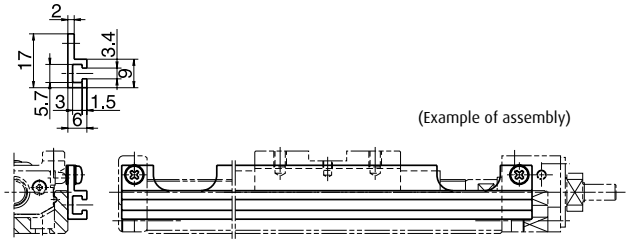

Sensor Rail for MCM05: MC-SRL5- * * * *

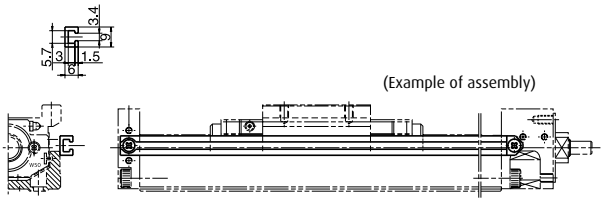

Sensor Rail for MCM02: MC-SRL2- * * * *

Sensor Rail for MCM06: MC-SRL6- * * * *

Sensor Rail for MCM08: MC-SRL8- * * * *

Sensor Rail for MCM10: MC-SRL1- * * * *

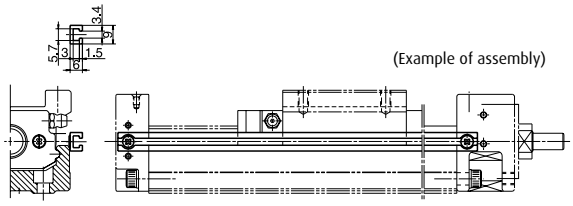

* * * * is the same as rail dimension L2
Please install washer between sensor rail and support blocks for MCM03, MCM05, MCM06 and MCM08.

MCM Series and Sensor Rail Combination Table

Model No.	Body length L_2 (mm)	Reference No.	Sensor rail reference No.
MCM02	100	MCM02005H01K MCM02005P01K MCM02005H02K MCM02005P02K	MC-SRL2-0100*
	150	MCM02010H01K MCM02010P01K MCM02010H02K MCM02010P02K	MC-SRL2-0150
	200	MCM02015H01K MCM02015P01K MCM02015H02K MCM02015P02K	MC-SRL2-0200
MCM03	115	MCM03005P01K00 MCM03005P02K00	MC-SRL3-0115
	140	MCM03005H05K00 MCM03005H10K00 MCM03005H12K00 MCM03005H15K00	MC-SRL3-0140
	190	MCM03010P01K00 MCM03010P02K00 MCM03010H05K00 MCM03010H10K00 MCM03010H12K00 MCM03010H15K00	MC-SRL3-0190
	240	MCM03015P01K00 MCM03015P02K00 MCM03015H05K00 MCM03015H10K00 MCM03015H12K00 MCM03015H15K00	MC-SRL3-0240
	290	MCM03020H05K00 MCM03020H10K00 MCM03020H12K00 MCM03020H15K00	MC-SRL3-0290
	340	MCM03025H05K00 MCM03025H10K00 MCM03025H12K00 MCM03025H15K00	MC-SRL3-0340
MCM05	180	MCM05005H05K00 MCM05005H10K00 MCM05005H20K00	MC-SRL5-0180
	230	MCM05010H05K00 MCM05010H10K00 MCM05010H20K00	MC-SRL5-0230
	280	MCM05015H05K00 MCM05015H10K00 MCM05015H20K00 MCM05006H10D00	MC-SRL5-0280
	330	MCM05020H05K00 MCM05020H10K00 MCM05020H20K00 MCM05011H10D00	MC-SRL5-0330
	380	MCM05025H05K00 MCM05025H10K00 MCM05025H20K00 MCM05016H10D00	MC-SRL5-0380
	430	MCM05030H05K00 MCM05030H10K00 MCM05030H20K00 MCM05030H30K00 MCM05021H10D00 MCM05021H20D00	MC-SRL5-0430
	530	MCM05040H05K00 MCM05040H10K00 MCM05040H20K00 MCM05040H30K00 MCM05031H10D00 MCM05031H20D00	MC-SRL5-0530

Model No.	Body length L_2 (mm)	Reference No.	Sensor rail reference No.
MCM05	630	MCM05050H05K00 MCM05050H10K00 MCM05050H20K00 MCM05050H30K00 MCM05041H10D00 MCM05041H20D00	MC-SRL5-0630
	730	MCM05060H05K00 MCM05060H10K00 MCM05060H20K00 MCM05060H30K00 MCM05051H10D00 MCM05051H20D00	MC-SRL5-0730
MCM06	190	MCM06005H05K02 MCM06005H10K00 MCM06005H20K00	MC-SRL6-0190
	240	MCM06010H05K02 MCM06010H10K00 MCM06010H20K00	MC-SRL6-0240
	290	MCM06015H05K02 MCM06015H10K00 MCM06015H20K00	MC-SRL6-0290
	340	MCM06020H05K02 MCM06020H10K00 MCM06020H20K00 MCM06011H05D02 MCM06011H10D00	MC-SRL6-0340
	390	MCM06025H05K02 MCM06025H10K00 MCM06025H20K00	MC-SRL6-0390
	440	MCM06030H05K02 MCM06030H10K00 MCM06030H20K00 MCM06021H05D02 MCM06021H10D00 MCM06021H20D00	MC-SRL6-0440
	540	MCM06040H05K02 MCM06040H10K00 MCM06040H20K00 MCM06031H05D02 MCM06031H10D00 MCM06031H20D00	MC-SRL6-0540
	640	MCM06050H05K02 MCM06050H10K00 MCM06050H20K00 MCM06041H05D02 MCM06041H10D00 MCM06041H20D00	MC-SRL6-0640
	740	MCM06060H05K02 MCM06060H10K00 MCM06060H20K00 MCM06051H10D00 MCM06051H20D00	MC-SRL6-0740
	840	MCM06070H05K02 MCM06070H10K00 MCM06070H20K00 MCM06061H10D00 MCM06061H20D00	MC-SRL6-0840
	940	MCM06080H05K02 MCM06080H10K00 MCM06080H20K00 MCM06071H10D00 MCM06071H20D00	MC-SRL6-0940

*) When using NSK standard sensors, prepare two sensor rails. Two sensor rails will also be required for other Monocarriers depending on signal points of sensors. Contact NSK for details.

Model No.	Body length L_2 (mm)	Reference No.	Sensor rail reference No.
MCM08	220	MCM08005H05K02 MCM08005H10K00	MC-SRL8-0220
	270	MCM08010H05K02 MCM08010H10K00 MCM08010H20K00	MC-SRL8-0270
	320	MCM08015H05K02 MCM08015H10K00 MCM08015H20K00	MC-SRL8-0320
	370	MCM08020H05K02 MCM08020H10K00 MCM08020H20K00 MCM08008H10D00	MC-SRL8-0370
	420	MCM08025H05K02 MCM08025H10K00 MCM08025H20K00	MC-SRL8-0420
	470	MCM08030H05K02 MCM08030H10K00 MCM08030H20K00 MCM08018H10D00 MCM08018H20D00	MC-SRL8-0470
	570	MCM08040H05K02 MCM08040H10K00 MCM08040H20K00 MCM08040H30K00 MCM08028H10D00 MCM08028H20D00	MC-SRL8-0570
	670	MCM08050H05K02 MCM08050H10K00 MCM08050H20K00 MCM08050H30K00 MCM08038H10D00 MCM08038H20D00	MC-SRL8-0670
	770	MCM08060H05K02 MCM08060H10K00 MCM08060H20K00 MCM08060H30K00 MCM08048H10D00 MCM08048H20D00	MC-SRL8-0770
	870	MCM08070H05K02 MCM08070H10K00 MCM08070H20K00 MCM08070H30K00 MCM08058H10D00 MCM08058H20D00	MC-SRL8-0870
	970	MCM08080H05K02 MCM08080H10K00 MCM08080H20K00 MCM08080H30K00 MCM08068H10D00 MCM08068H20D00	MC-SRL8-0970

Model No.	Body length L_2 (mm)	Reference No.	Sensor rail reference No.
MCM10	280	MCM10010H10K00 MCM10010H20K00	MC-SRL1-0280
	330	MCM10015H10K00 MCM10015H20K00	MC-SRL1-0330
	380	MCM10020H10K00 MCM10020H20K00 MCM10007H10D00	MC-SRL1-0380
	430	MCM10025H10K00 MCM10025H20K00	MC-SRL1-0430
	480	MCM10030H10K00 MCM10030H20K00 MCM10017H10D00 MCM10017H20D00	MC-SRL1-0480
	580	MCM10040H10K00 MCM10040H20K00 MCM10027H10D00 MCM10027H20D00	MC-SRL1-0580
	680	MCM10050H10K00 MCM10050H20K00 MCM10050H30K00 MCM10037H10D00 MCM10037H20D00	MC-SRL1-0680
	780	MCM10060H10K00 MCM10060H20K00 MCM10060H30K00 MCM10047H10D00 MCM10047H20D00	MC-SRL1-0780
	880	MCM10070H10K00 MCM10070H20K00 MCM10070H30K00 MCM10057H10D00 MCM10057H20D00	MC-SRL1-0880
	980	MCM10080H10K00 MCM10080H20K00 MCM10080H30K00 MCM10067H10D00 MCM10067H20D00	MC-SRL1-0980
	1,080	MCM10090H10K00 MCM10090H20K00	MC-SRL1-1080
	1,180	MCM10100H10K00 MCM10100H20K00 MCM10087H10D00 MCM10087H20D00	MC-SRL1-1180

2.3.2 Cover Unit

Cover Unit for MCM02

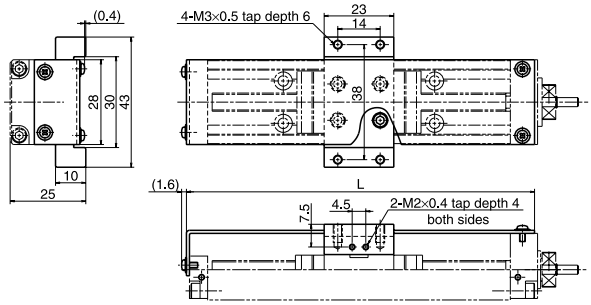

(Unit: mm)

Stroke	Reference Number	Length (L)
50	MC-CV02005-00	115
100	MC-CV02010-00	165
150	MC-CV02015-00	215

Height of screw head is not included.

Cover Unit for MCM03

Notes: 1. When the cover is used for leads 1 and 2, an optional spacer plate (nominal No.: MC-SP03-00) is required.
2. When the cover is used for lead 15, an optional spacer plate (nominal No.: MC-SP03-01) is required. A full cover unit cannot be installed for lead 15.

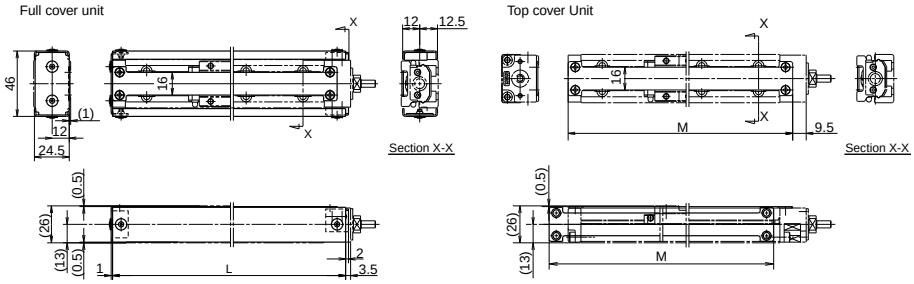

(Unit: mm)

Stroke	Reference No.		Cover length	
	Top cover unit	Full cover unit	Length (L)	Length (M)
50 (lead 1, 2)	MC-CV03005-02	*MC-CV03005-01	139	133
50 (lead 5, 10, 12, 15)	MC-CV03005-02A	*MC-CV03005-01A	164	158
100	MC-CV03010-02	*MC-CV03010-01	214	208
150	MC-CV03015-02	*MC-CV03015-01	264	258
200	MC-CV03020-02	*MC-CV03020-01	314	308
250	MC-CV03025-02	*MC-CV03025-01	364	358

*) The full-cover unit cannot be used when the sensor unit is used.
Height of screw head is not included.

Spacer for MCM03 (Optional)

MC-SP03-00 (for Ball Screw Lead 1 and 2 mm)

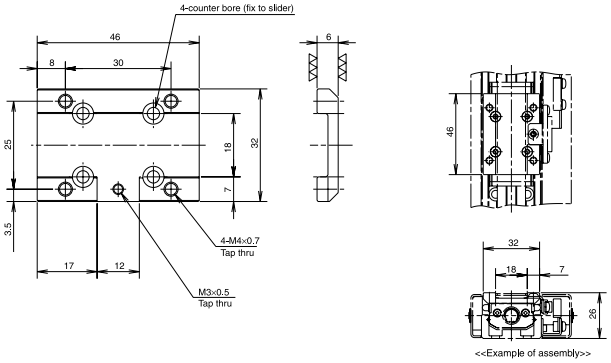

Note: Spacer is required when using sensor unit and cover unit.

MC-SP03-01 (for Ball Screw Lead 15mm)

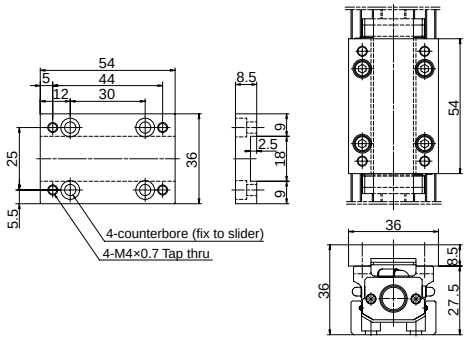

Note: To use an upper surface cover, use it during assembly.

Cover Unit for MCM05, 06, 08 and 10

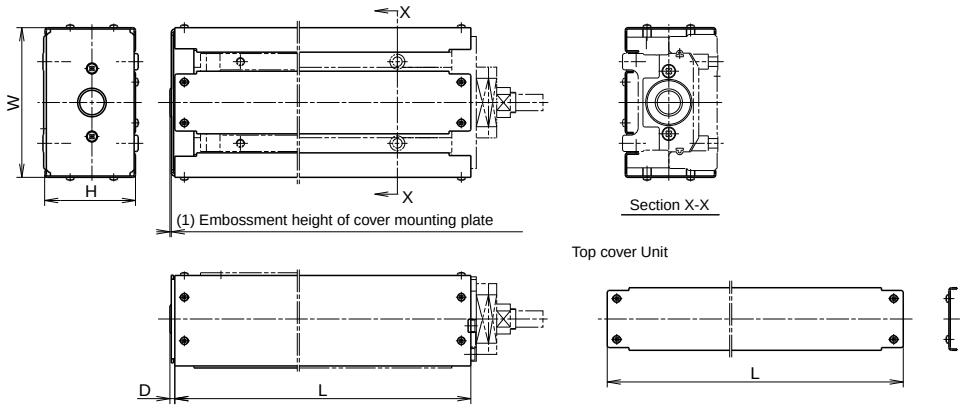

Unit: mm

Model No.	Stroke		Cover Unit Reference No.		Cover length			
	Single slider	Double slider	Top cover Unit	Full cover Unit*1	Length (L)	Height (H)	Width (W)	End part (D)
MCM05	50	—	MC-CV05005-01	MC-CV05005-00	200	38.5	65	2.6
	100	—	MC-CV05010-01	MC-CV05010-00	250			
	150	60	MC-CV05015-01	MC-CV05015-00	300			
	200	110	MC-CV05020-01	MC-CV05020-00	350			
	250	160	MC-CV05025-01	MC-CV05025-00	400			
	300	210	MC-CV05030-01	MC-CV05030-00	450			
	400	310	MC-CV05040-01	MC-CV05040-00	550			
	500	410	MC-CV05050-01	MC-CV05050-00	650			
	600	510	MC-CV05060-37	MC-CV05060-35	750			
MCM06	50	—	MC-CV06005-01	MC-CV06005-00	225	48.5	75	—*2
	100	—	MC-CV06010-01	MC-CV06010-00	275			
	150	—	MC-CV06015-01	MC-CV06015-00	325			
	200	110	MC-CV06020-01	MC-CV06020-00	375			
	250	—	MC-CV06025-01	MC-CV06025-00	425			
	300	210	MC-CV06030-01	MC-CV06030-00	475			
	400	310	MC-CV06040-01	MC-CV06040-00	575			
	500	410	MC-CV06050-01	MC-CV06050-00	675			
	600	510	MC-CV06060-01	MC-CV06060-00	775			
	700	610	MC-CV06070-01	MC-CV06070-00	875			
	800	710	MC-CV06080-36	MC-CV06080-35	975			
MCM08	50	—	MC-CV08005-01	MC-CV08005-00	248	56.5	90	2.6
	100	—	MC-CV08010-01	MC-CV08010-00	298			
	150	—	MC-CV08015-01	MC-CV08015-00	348			
	200	80	MC-CV08020-01	MC-CV08020-00	398			
	250	—	MC-CV08025-01	MC-CV08025-00	448			
	300	180	MC-CV08030-01	MC-CV08030-00	498			
	400	280	MC-CV08040-01	MC-CV08040-00	598			
	500	380	MC-CV08050-01	MC-CV08050-00	698			
	600	480	MC-CV08060-01	MC-CV08060-00	798			
	700	580	MC-CV08070-01	MC-CV08070-00	898			
	800	680	MC-CV08080-01	MC-CV08080-00	998			
MCM10	100	—	MC-CV10010-01	MC-CV10010-00	308	66.5	110	3.6
	150	—	MC-CV10015-01	MC-CV10015-00	358			
	200	70	MC-CV10020-01	MC-CV10020-00	408			
	250	—	MC-CV10025-01	MC-CV10025-00	458			
	300	170	MC-CV10030-01	MC-CV10030-00	508			
	400	270	MC-CV10040-01	MC-CV10040-00	608			
	500	370	MC-CV10050-01	MC-CV10050-00	708			
	600	470	MC-CV10060-01	MC-CV10060-00	808			
	700	570	MC-CV10070-01	MC-CV10070-00	908			
	800	670	MC-CV10080-01	MC-CV10080-00	1,008			
	900	—	MC-CV10090-01	MC-CV10090-00	1,108			
	1,000	870	MC-CV10100-36	MC-CV10100-35	1,208			

Note: The dimensions of cover shown above do not include the head height of fixing machine screws. Add the head of machine screws of approximately 2.5 mm to the outer measurement of a cover unit. Set a margin for mechanical interference with surrounding components.
*1) When using sensor unit, full-cover unit cannot be used.
*2) A cover mounting plate is not used to MCM06.

2.3.3 Motor Bracket
2.3.3.1 Motor Bracket by NEMA Size

MCM02 (NEMA 17)

Reference Number
MC-BK02-231-31

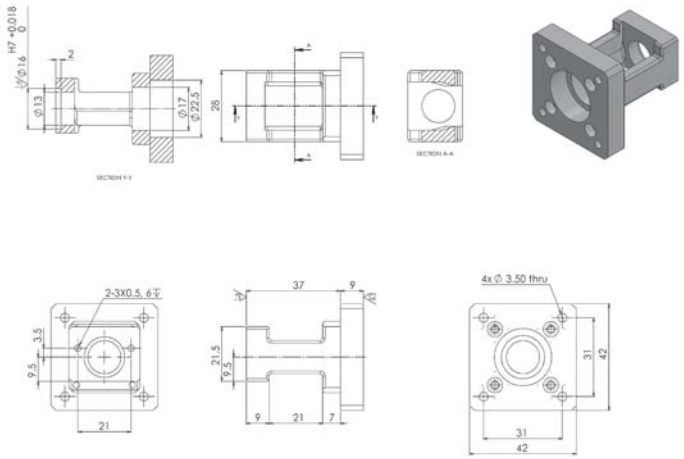

Included:

4 pcs	M3x0.5x12	Socket Head Cap Screws
2 pcs	M3x0.5x10	Socket Head Cap Screws

MCM03 (Blank)

Reference Number
MC-BK03-000-31

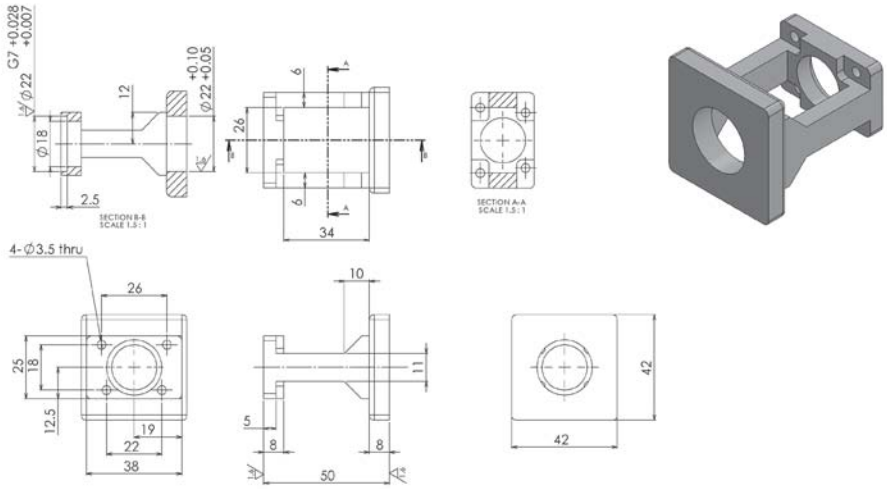

Included:

4 pcs	M3x0.5x10	Socket Head Cap Screws

MCM03 (NEMA 17)

Reference Number
MC-BK03-231-31

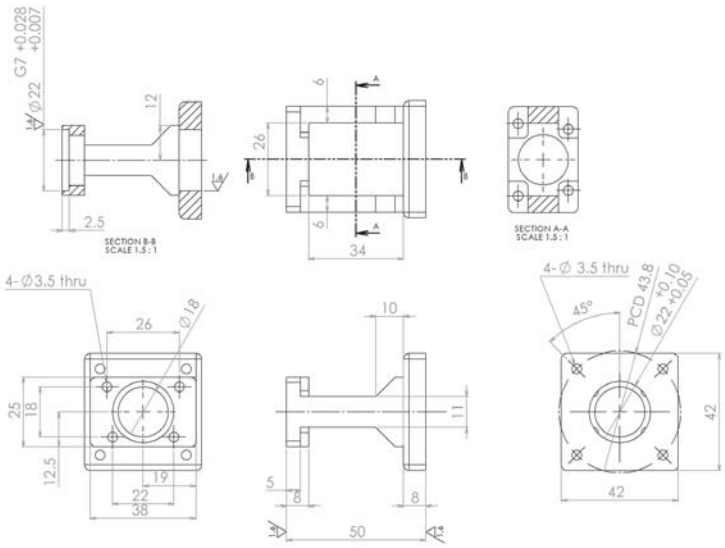

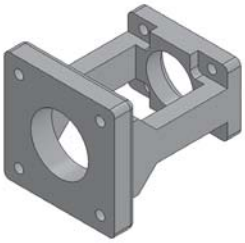

Included:

4 pcs	M3x0.5x10	Socket Head Cap Screws

MCM03 (NEMA 23)

Reference Number
MC-BK03-167-32

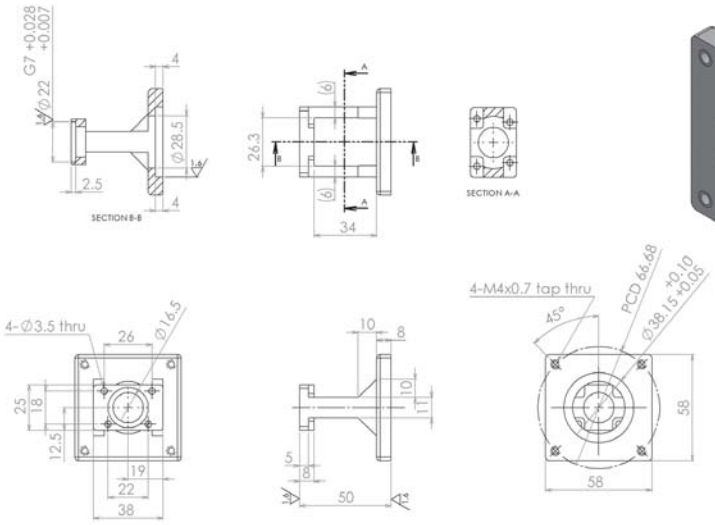

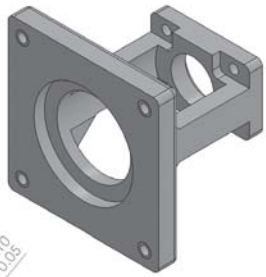

Included:

4 pcs	M3x0.5x10	Socket Head Cap Screws
4 pcs	M4x0.7x12	Socket Head Cap Screws

MCM05 (Blank)

Reference Number
MC-BK05-000-31

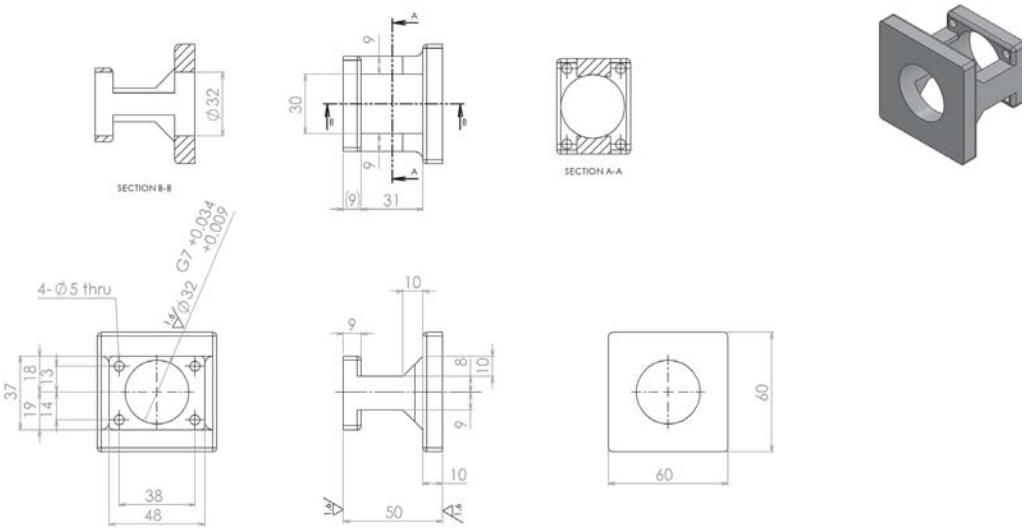

Included:

4 pcs	M4x0.7x15	Socket Head Cap Screws

MCM05 (NEMA 23)

Reference Number
MC-BK05-167-31

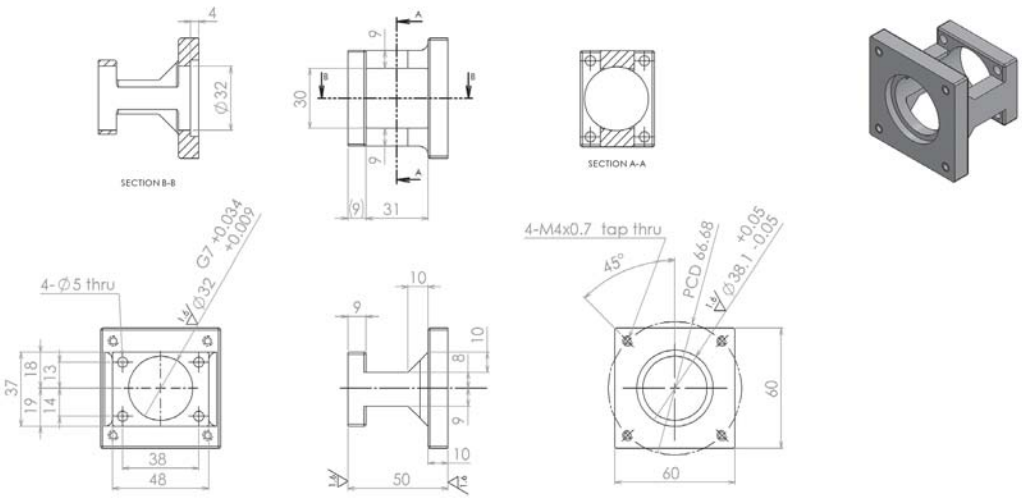

Included:

4 pcs	M4x0.7x14	Socket Head Cap Screws
4 pcs	M4x0.7x15	Socket Head Cap Screws

MCM05 (NEMA 34)

Reference Number
MC-BK05-198-31

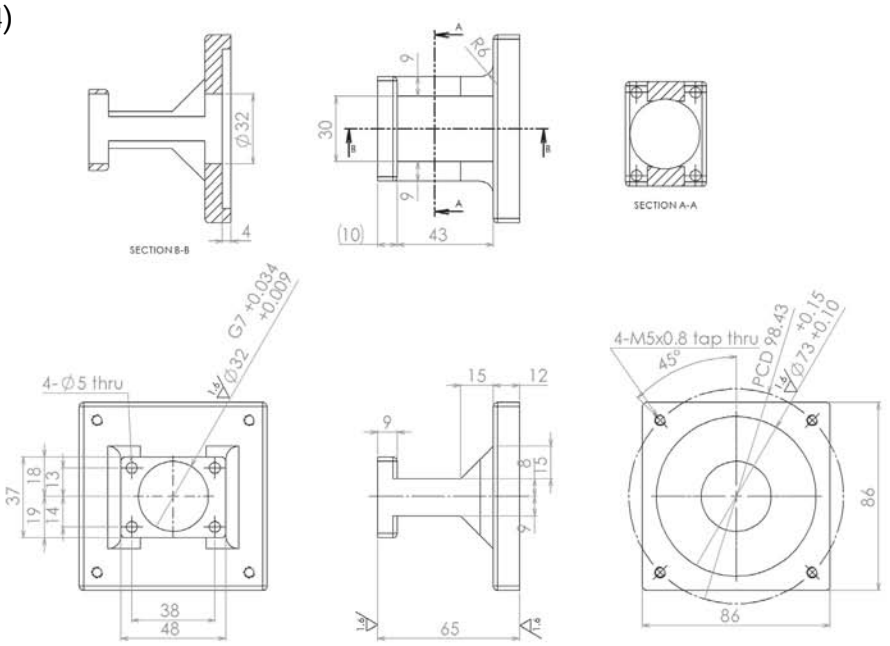

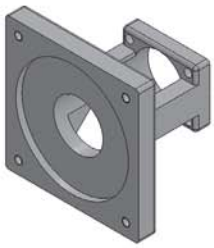

Included:

4 pcs	M4x0.7x15	Socket Head Cap Screws
4 pcs	M5x0.8x16	Socket Head Cap Screws

MCM06 (NEMA 23)

Reference Number
MC-BK06-167-31

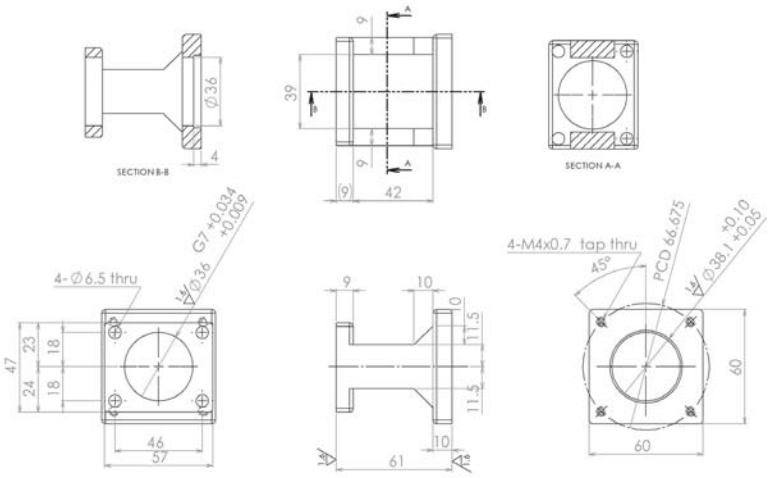

Included:

4 pcs	M6x1.0x16	Socket Head Cap Screws
4 pcs	M4x0.7x14	Socket Head Cap Screws

MCM08 (NEMA 23)

Reference Number
MC-BK08-167-31

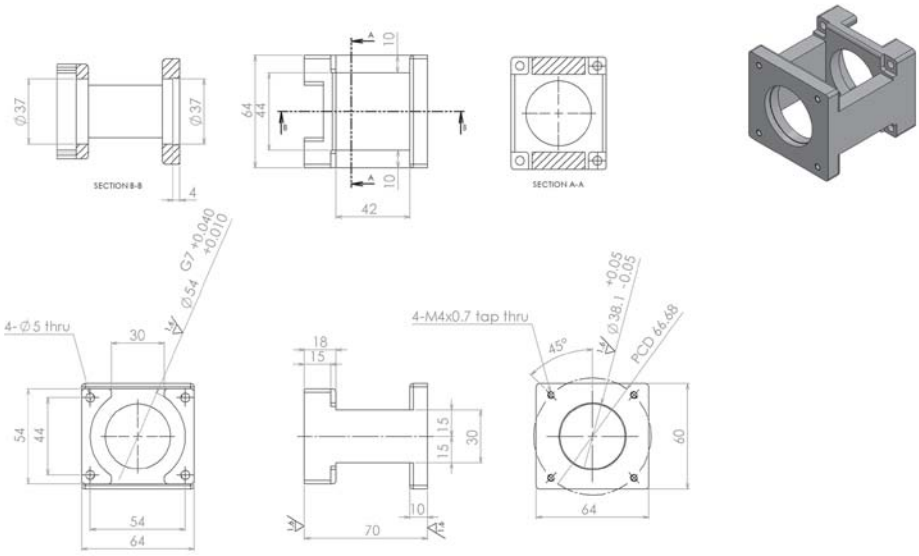

Included:

4 pcs	M4x0.7x20	Socket Head Cap Screws
4 pcs	M4x0.7x14	Socket Head Cap Screws

MCM08 (Blank)

Reference Number
MC-BK08-000-31

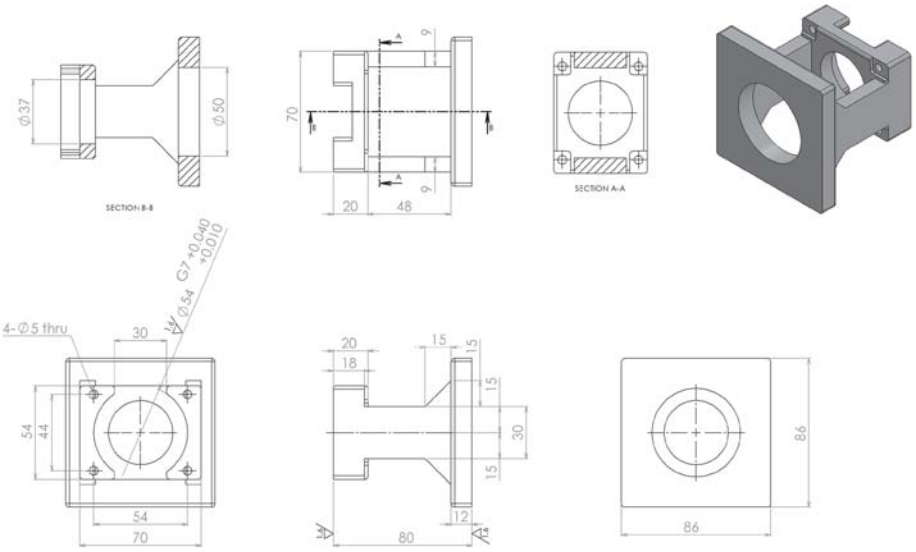

Included:

4 pcs	M4x0.7x22	Socket Head Cap Screws

MCM08 (NEMA 34)

Reference Number
MC-BK08-198-31

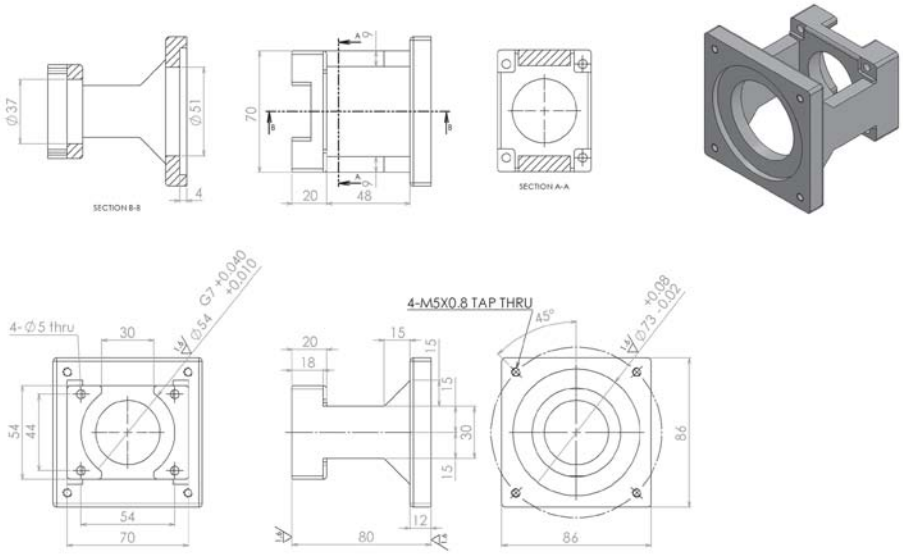

Included:

4 pcs	M4x0.7x22	Socket Head Cap Screws
4 pcs	M5x0.8x16	Socket Head Cap Screws

MCM10 (NEMA 23)

Reference Number
MC-BK10-167-31

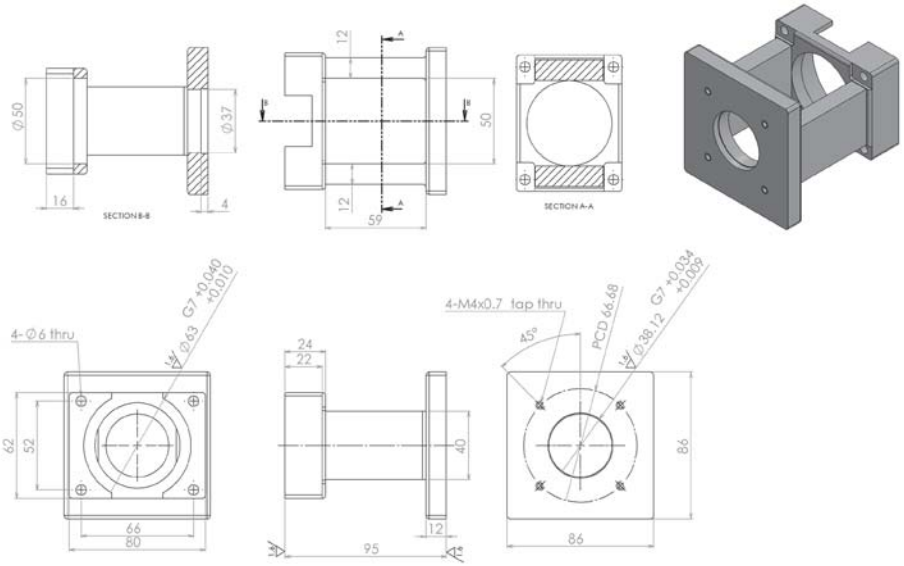

Included:

4 pcs	M5x0.8x30	Socket Head Cap Screws
4 pcs	M4x0.7x22	Socket Head Cap Screws

MCM10 (Blank)

Reference Number
MC-BK10-000-31

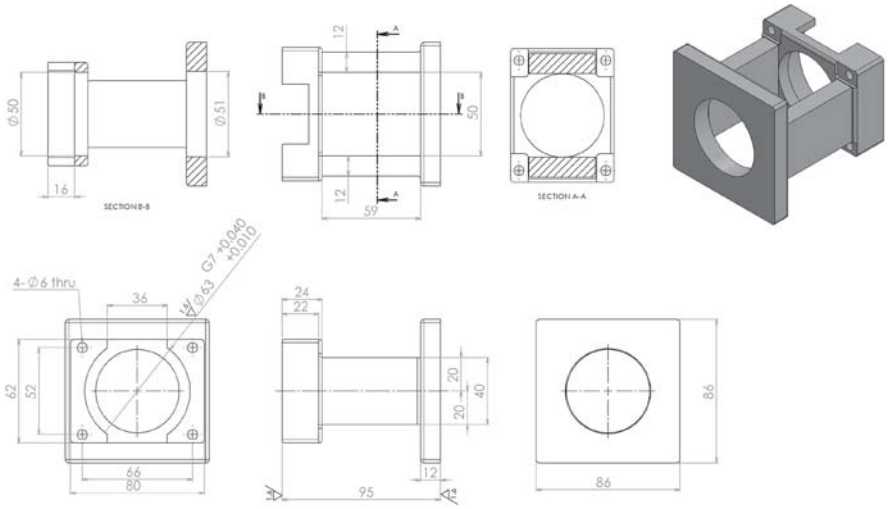

Included:

4 pcs	M5x0.8x30	Socket Head Cap Screws

MCM10 (NEMA 34)

Reference Number
MC-BK10-198-32

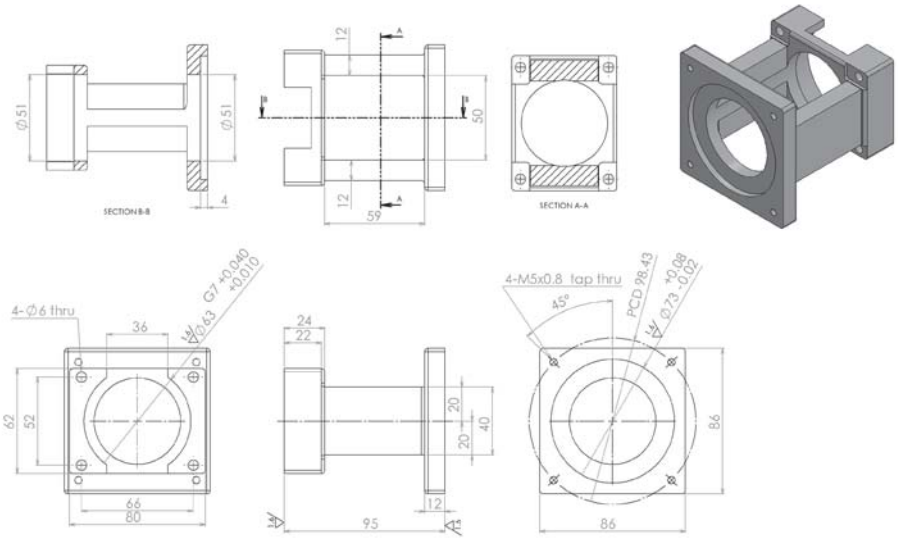

Included:

4 pcs	M5x0.8x30	Socket Head Cap Screws
4 pcs	M5x0.8x16	Socket Head Cap Screws

2.3.3.2 Motor Bracket by Standard Size

MCM02

Reference Number
MC-BK02-128-00

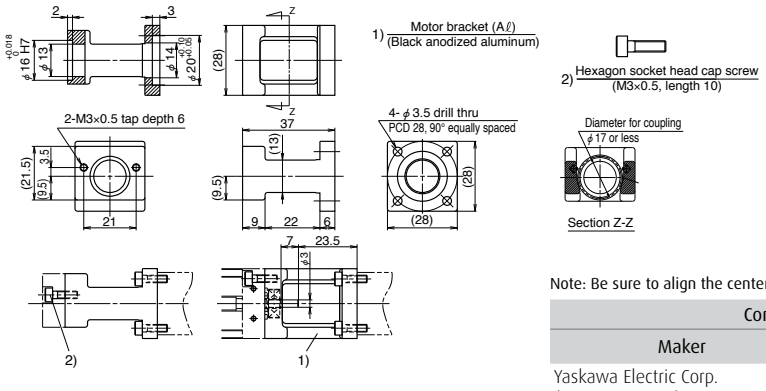

Note: Be sure to align the center lines when installing the motor.

Compatible motor	
Maker	Motor models
Yaskawa Electric Corp. (Σ - mini Series)	SGMM-A1(10W) SGMM-A2(20W)

Reference Number
MC-BK02-133-00

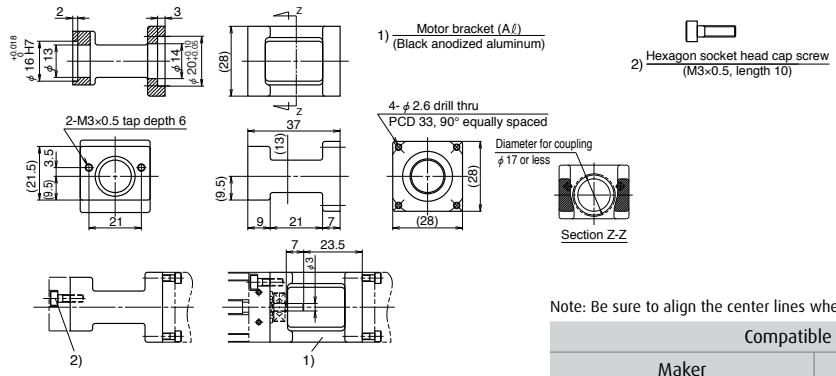

Note: Be sure to align the center lines when installing the motor.

Compatible motor	
Maker	Motor models
Mitsubishi Electric Corp. (Melservo series)	HC-AQ013(10W) HC-AQ023(20W)

Reference Number
MC-BK02-223-00

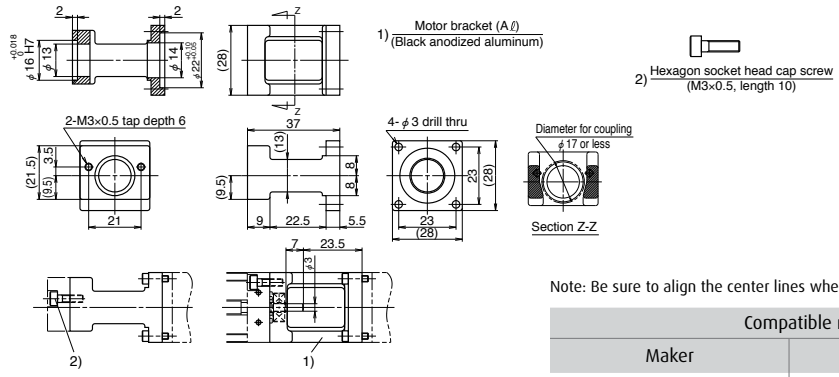

Note: Be sure to align the center lines when installing the motor.

Compatible motor	
Maker	Motor models
Oriental Motor Co., Ltd.	PMU33/35 (5-phase stepping motor) PMC33/35 (5-phase stepping motor)

MCM03

Reference Number
MC-BK03-146-00

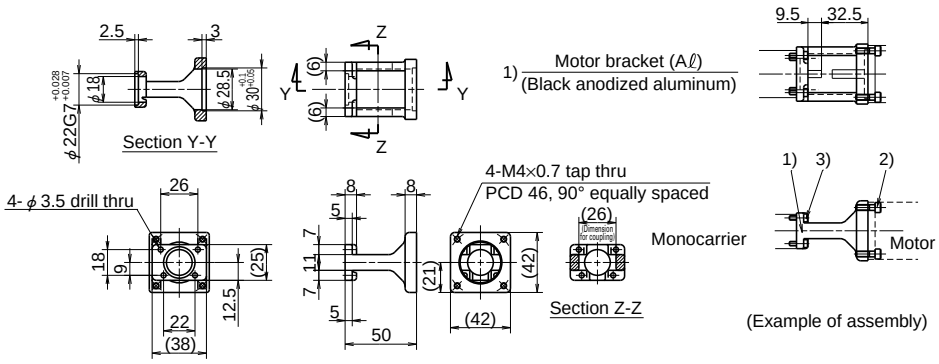

2) Hexagon socket head cap screw (M4, length 12)

3) Hexagon socket head cap screw (M3, length 10)

Notes:
1. Be sure to align centerlines when installing motor.
2. Be careful in the assembly orientation of bracket.
3. Because bracket is made by sand casting, external dimensions are for reference only.

Compatible motor	
Maker	Motor models
Yaskawa Electric Corp.	SGMAH-A3(30W), SGMJV-A5A(50W), SGMAV-A5A(50W), SGMJV-01A(100W), SGMAV-01A(100W), SGMAV-C2A(150W)
Mitsubishi Electric Corp.	HF-KP053(50W), HF-MP053(50W), HC-KFS053(50W), HC-MFS053(50W), HF-KP13(100W), HF-MP13(100W), HC-KFS13(100W), HC-MFS13(100W)
OMRON Corp.	R88M-W03(30W), R88M-W05(50W), R88M-W10(100W)
Sanyo Denki Co., Ltd.	P30B04003(30W), P30B04005(50W), P30B04010(100W)

MCM03

Reference Number
MC-BK03-148-01

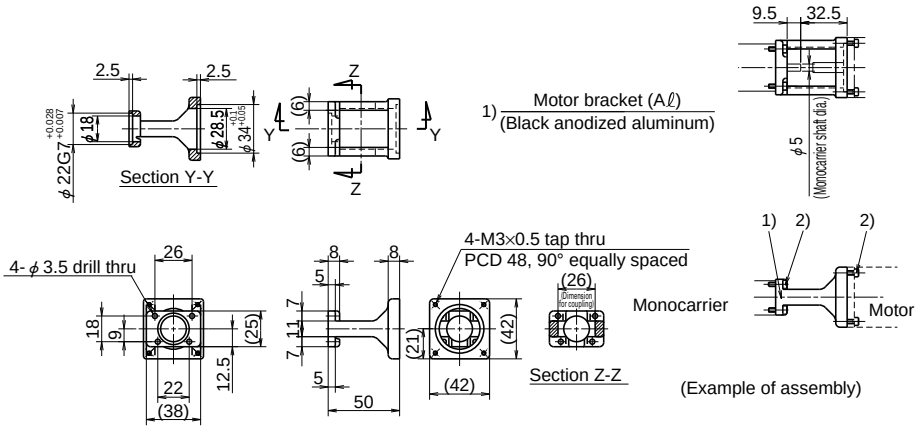

2) Hexagon socket head cap screw (M3, length 10)

Notes:
1. Be sure to align centerlines when installing motor.
2. Be careful in the assembly orientation of bracket.
3. Because bracket is made by sand casting, external dimensions are for reference only.

Compatible motor	
Maker	Motor models
Sanyo Denki Co., Ltd.	P50B04006(60W), P50B04010(100W)

MCM03

Reference Number
MC-BK03-231-00

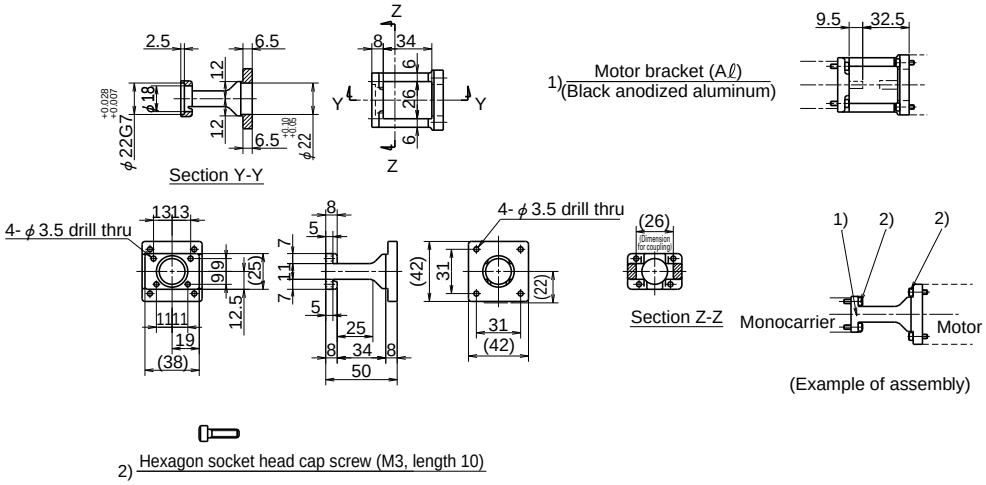

Note: Be sure to align the center lines when installing the motor.
Check the orientation of the bracket.

Compatible motor	
Maker	Motor models
Sanyo Denki Co., Ltd.	PBM423xxx, 103F55xx
Oriental Motor Co., Ltd.	AS46, ASC46, UPK54x, PK54x, CSK54x, CFK54x, UMK24x, CSK24x, PK24x

MCM05

Reference Number
MC-BK05-145-00

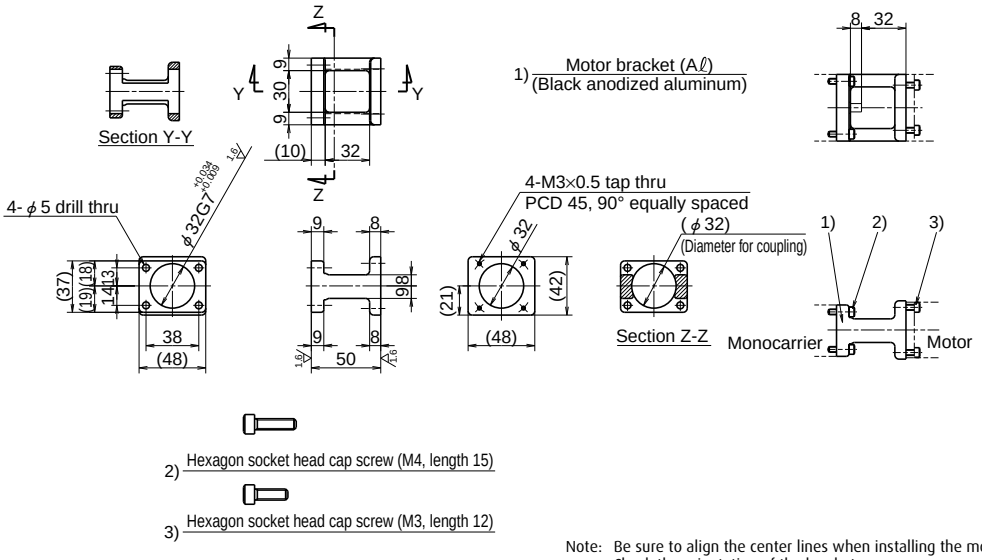

Note: Be sure to align the center lines when installing the motor.
Check the orientation of the bracket.

Compatible motor	
Maker	Motor models
Panasonic Co., Ltd.	MSMD5A(50W), MSMD01(100W)

MCM05

Reference Number
MC-BK05-146-00

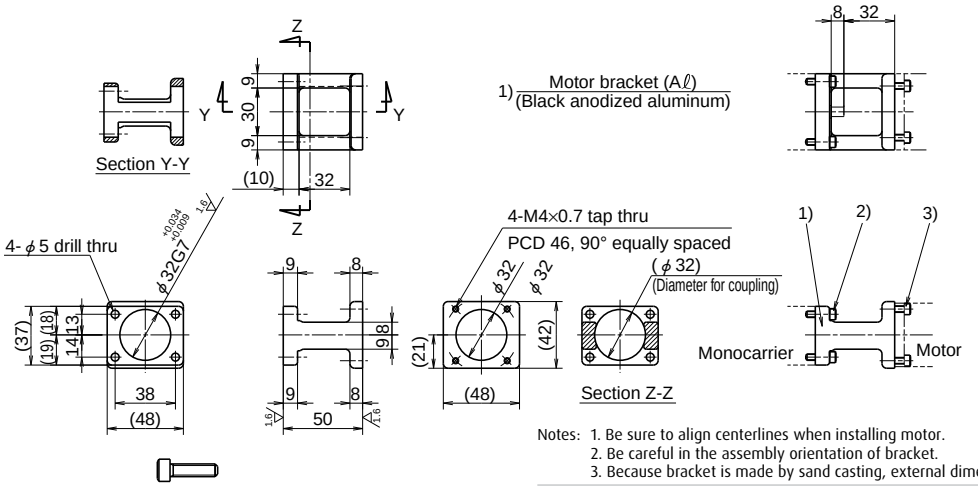

1) Motor bracket (Aℓ)
(Black anodized aluminum)

2) Hexagon socket head cap screw (M4, length 15)

3) Hexagon socket head cap screw (M4, length 12)

Notes: 1. Be sure to align centerlines when installing motor.
2. Be careful in the assembly orientation of bracket.
3. Because bracket is made by sand casting, external dimensions are for reference only.

Compatible motor	
Maker	Motor models
Yaskawa Electric Corp.	SGMAH-A3(30W), SGMJV-A5A(50W), SGMAV-A5A(50W), SGMJV-01A(100W), SGMAV-01A(100W), SGMAV-C2A(150W)
Mitsubishi Electric Corp.	HF-KP053(50W), HF-MP053(50W), HC-KFS053(50W), HC-MFS053(50W), HF-KP13(100W), HF-MP13(100W), HC-KFS13(100W), HC-MFS13(100W)
OMRON Corp.	R88M-W03(30W), R88M-W05(50W), R88M-W10(100W)
Sanyo Denki Co., Ltd.	P30B04003(30W), P30B04005(50W), P30B04010(100W)

MCM05

Reference Number
MC-BK05-148-00

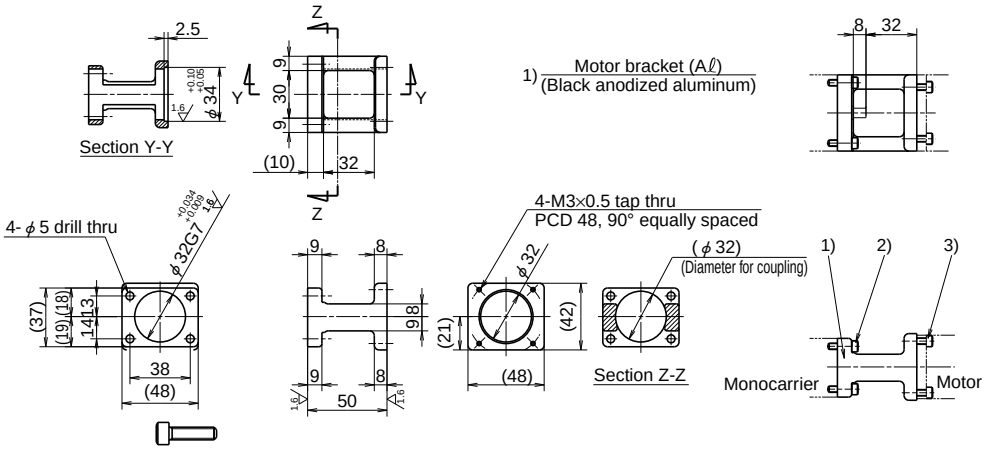

1) Motor bracket (Aℓ)
(Black anodized aluminum)

2) Hexagon socket head cap screw (M4, length 15)

3) Hexagon socket head cap screw (M3, length 12)

Notes: 1. Be sure to align centerlines when installing motor.
2. Be careful in the assembly orientation of bracket.
3. Because bracket is made by sand casting, external dimensions are for reference only.

Compatible motor	
Maker	Motor models
Panasonic Co., Ltd.	MAMA01(100W)

MCM05

Reference Number
MC-BK05-160-00

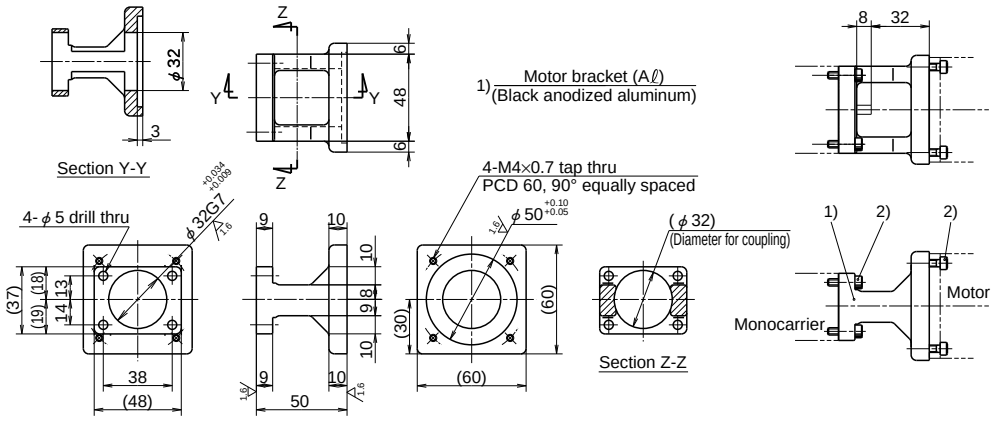

2) Hexagon socket head cap screw
(M4, length 15)

Notes: 1. Be sure to align centerlines when installing motor.
2. Be careful in the assembly orientation of bracket.
3. Because bracket is made by sand casting, external dimensions are for reference only.

Compatible motor	
Maker	Motor models
Sanyo Denki Co., Ltd.	P50B05005(50W), P50B05010(100W), P50B05020(200W)

MCM05

Reference Number
MC-BK05-250-00

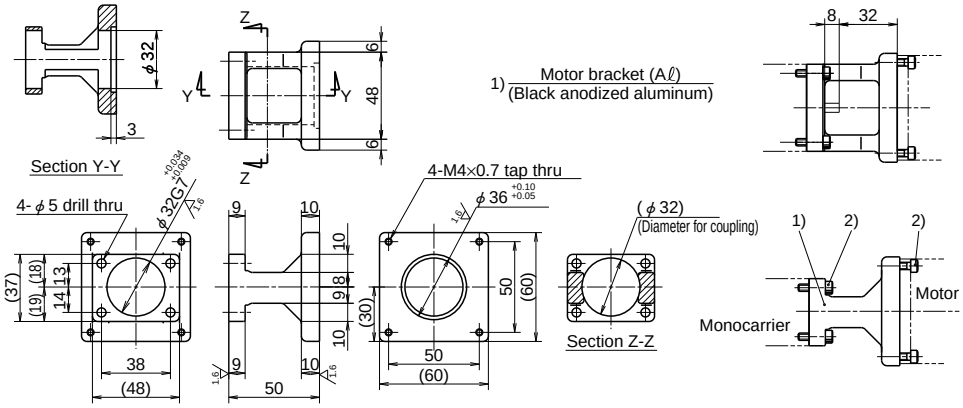

2) Hexagon socket head cap screw
(M4, length 15)

Notes: 1. Be sure to align centerlines when installing motor.
2. Be careful in the assembly orientation of bracket.
3. Because bracket is made by sand casting, external dimensions are for reference only.

Compatible motor	
Maker	Motor models
Sanyo Denki Co., Ltd.	PBM603xxx, PBM604xxx, 103F78xx
Oriental Motor Co., Ltd.	AS66, ASC66, UPK56x, UFK56x, PK56x, CSK56x, CFK56x

MCM06

Reference Number
MC-BK06-145-00

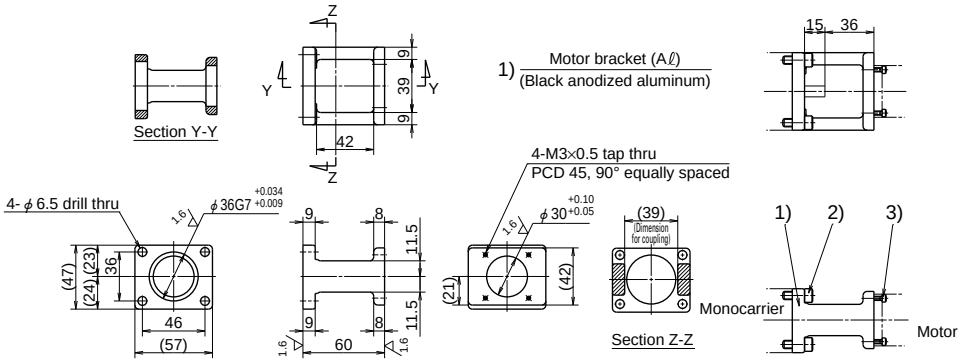

2) Hexagon socket head cap screw (M6, length 16)

3) Hexagon socket head cap screw (M3, length 12)

Notes: 1. Be sure to align centerlines when installing motor.
2. Be careful in the assembly orientation of bracket.
3. Because bracket is made by sand casting, external dimensions are for reference only.

Compatible motor	
Maker	Motor models
Panasonic Co., Ltd.	MSMD5A(50W), MSMD01(100W)

MCM06

Reference Number
MC-BK06-146-00

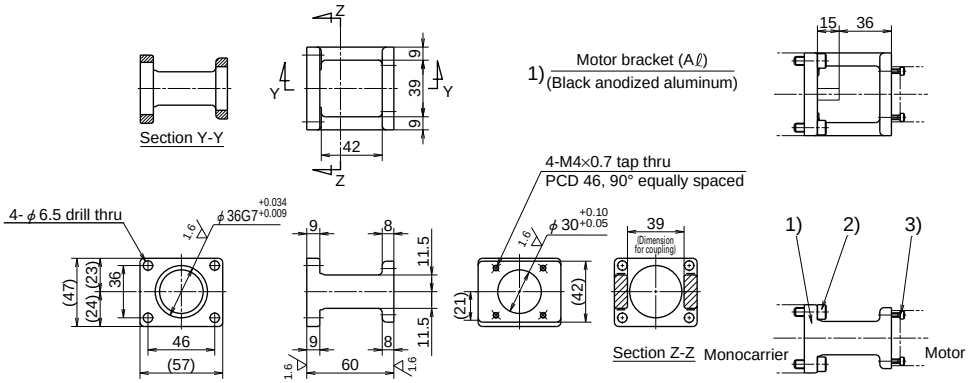

2) Hexagon socket head cap screw (M6, length 16)

3) Hexagon socket head cap screw (M4, length 12)

Notes: 1. Be sure to align centerlines when installing motor.
2. Be careful in the assembly orientation of bracket.
3. Because bracket is made by sand casting, external dimensions are for reference only.

Compatible motor	
Maker	Motor models
Yaskawa Electric Corp.	SGMJV-A5A(50W), SGMAV-A5A(50W), SGMJV-01A(100W), SGMAV-01A(100W), SGMAV-C2A(150W)
Mitsubishi Electric Corp.	HF-KP053(50W), HF-MP053(50W), HC-KFS053(50W), HC-MFS053(50W), HF-KP13(100W), HF-MP13(100W), HC-KFS13(100W), HC-MFS13(100W)
OMRON Corp.	R88M-W03(30W), R88M-W05(50W), R88M-W10(100W)
Sanyo Denki Co., Ltd.	P30B04003(30W), P30B04005(50W), P30B04010(100W)

MCM06

Reference Number
MC-BK06-148-00

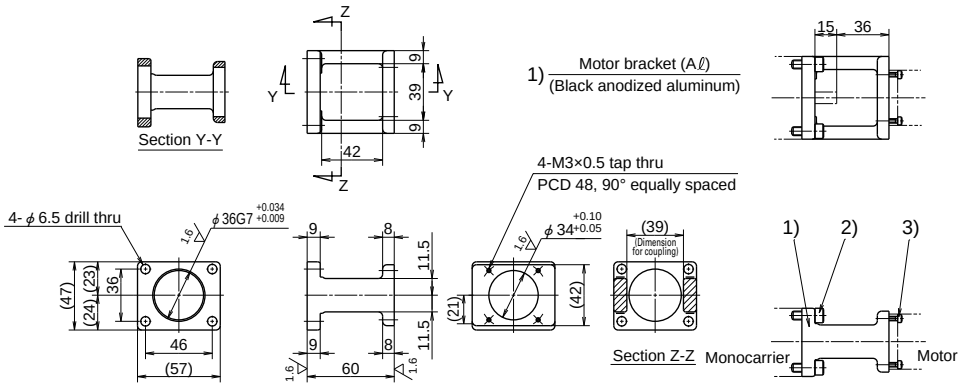

2) Hexagon socket head cap screw (M6, length 16)

3) Hexagon socket head cap screw (M3, length 12)

Notes: 1. Be sure to align centerlines when installing motor.
2. Be careful in the assembly orientation of bracket.
3. Because bracket is made by sand casting, external dimensions are for reference only.

Compatible motor	
Maker	Motor models
Panasonic Co., Ltd.	MAMA01(100W)
Sanyo Denki Co., Ltd.	P50B04006(60W), P50B04010(100W)

MCM06

Reference Number
MC-BK06-160-00

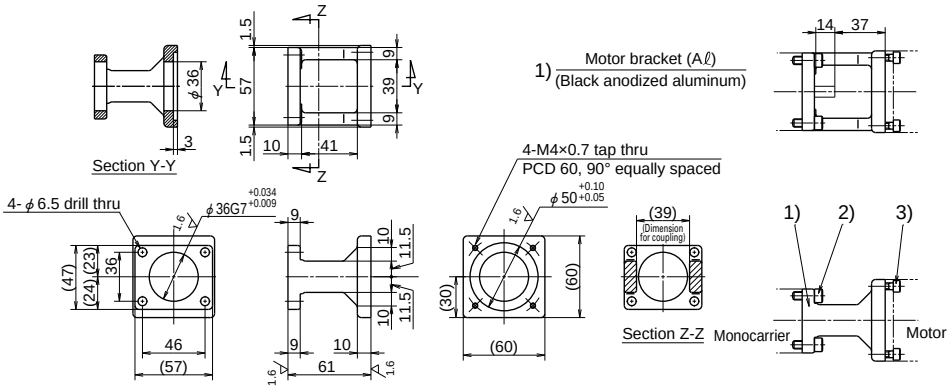

2) Hexagon socket head cap screw (M6, length 16)

3) Hexagon socket head cap screw (M4, length 14)

Notes: 1. Be sure to align centerlines when installing motor.
2. Be careful in the assembly orientation of bracket.
3. Because bracket is made by sand casting, external dimensions are for reference only.

Compatible motor	
Maker	Motor models
Sanyo Denki Co., Ltd.	P50B05005(50W), P50B05010(100W), P50B05020(200W)

MCM06

Reference Number
MC-BK06-170-00

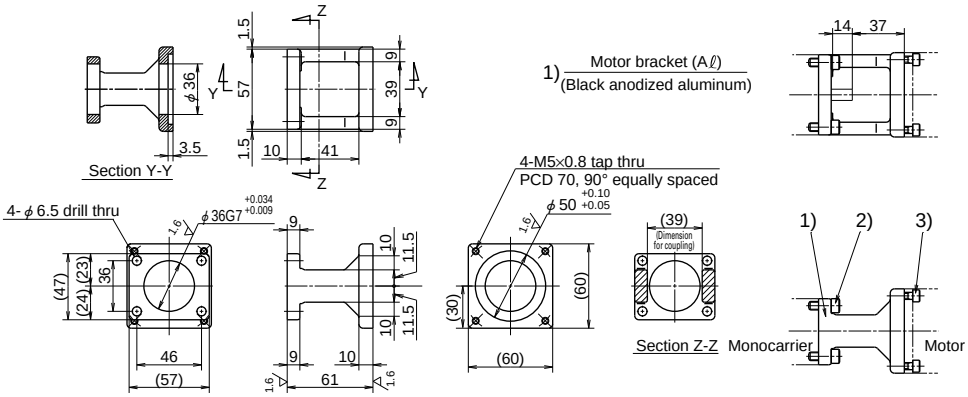

1) Motor bracket (Aℓ)
(Black anodized aluminum)

2) Hexagon socket head cap screw (M6, length 16)

3) Hexagon socket head cap screw (M5, length 14)

Notes: 1. Be sure to align centerlines when installing motor.
2. Be careful in the assembly orientation of bracket.
3. Because bracket is made by sand casting, external dimensions are for reference only.

Compatible motor	
Maker	Motor models
Yaskawa Electric Corp.	SGMJV-02A(200W), SGMAV-02A(200W), SGMJV-04A(400W), SGMAV-04A(400W)
Mitsubishi Electric Corp.	HF-KP23(200W), HF-MP23(200W), HF-KP43(400W), HF-MP43(400W), HC-KFS23(200W), HC-MFS23(200W), HC-KFS43(400W), HC-MFS43(400W)
OMRON Corp.	R88M-W20(200W), R88M-W40(400W)
Sanyo Denki Co., Ltd.	P30B06020(200W), P30B06040(400W)

MCM06

Reference Number
MC-BK06-170-01

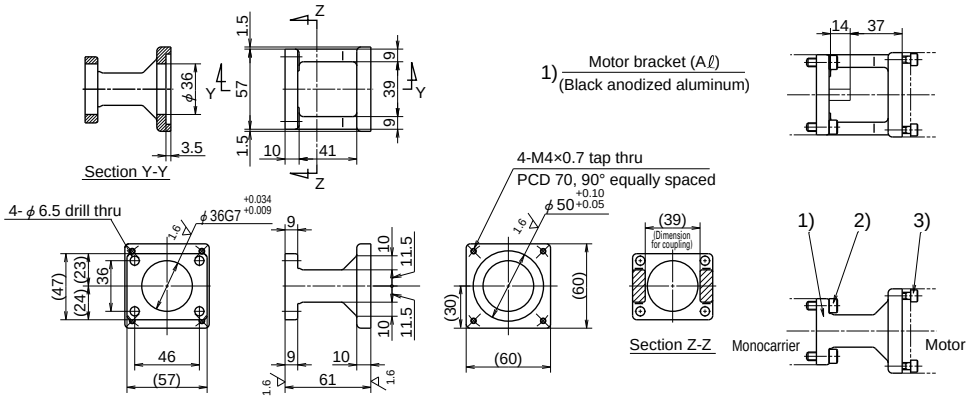

1) Motor bracket (Aℓ)
(Black anodized aluminum)

2) Hexagon socket head cap screw (M6, length 16)

3) Hexagon socket head cap screw (M4, length 14)

Notes: 1. Be sure to align centerlines when installing motor.
2. Be careful in the assembly orientation of bracket.
3. Because bracket is made by sand casting, external dimensions are for reference only.

Compatible motor	
Maker	Motor models
Panasonic Co., Ltd.	MSMD02(200W), MAMA02(200W), MSMD04(400W), MAMA04(400W)

MCM06

Reference Number
MC-BK06-250-00

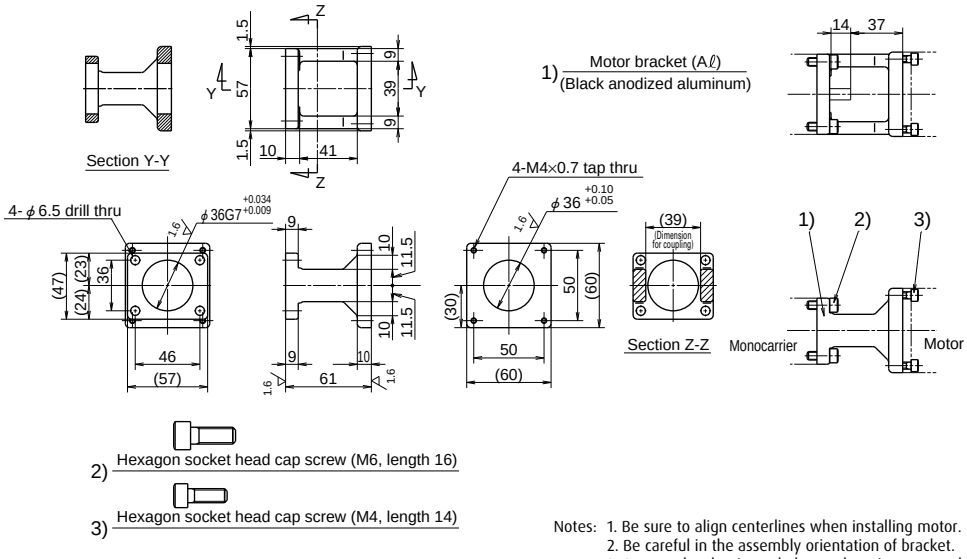

Notes: 1. Be sure to align centerlines when installing motor.
2. Be careful in the assembly orientation of bracket.
3. Because bracket is made by sand casting, external dimensions are for reference only.

Compatible motor	
Maker	Motor models
Sanyo Denki Co., Ltd.	PBM603xxx, PBM604xxx, 103F78xx
Oriental Motor Co., Ltd.	AS66, ASC66, UPK56x, PK56x, CSK56x,CFK56x, UMK56x, UFK56x

MCM08

Reference Number
MC-BK08-145-00

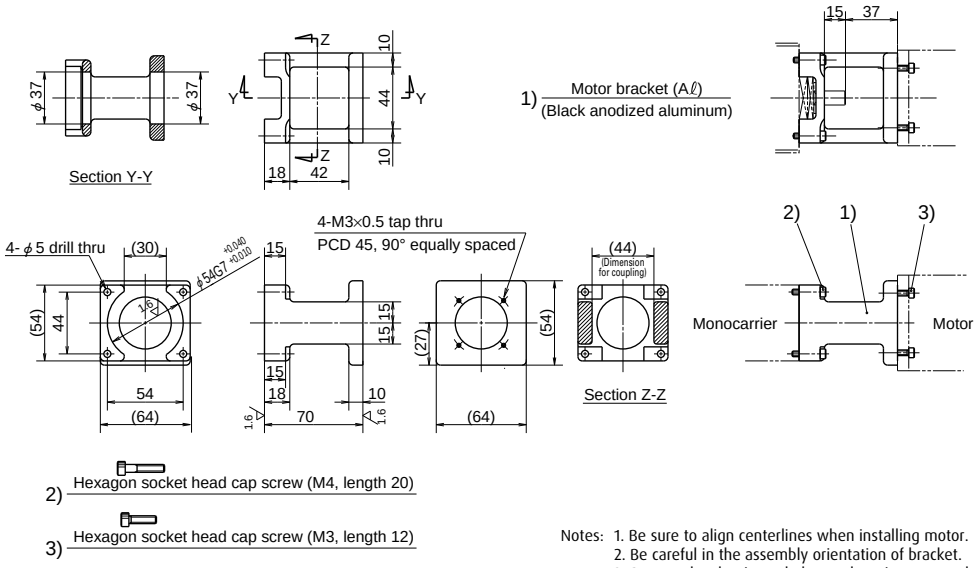

Notes: 1. Be sure to align centerlines when installing motor.
2. Be careful in the assembly orientation of bracket.
3. Because bracket is made by sand casting, external dimensions are for reference only.

Compatible motor	
Maker	Motor models
Panasonic Co., Ltd.	MSMD01(100W)

MCM08

Reference Number
MC-BK08-146-00

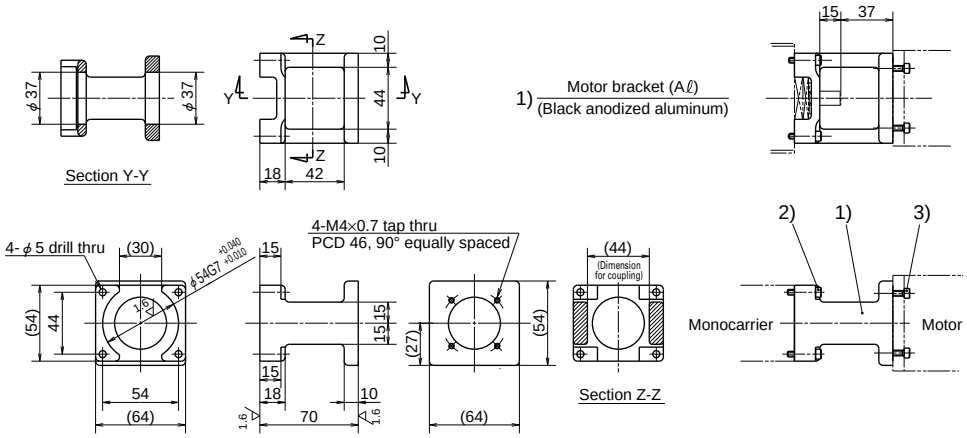

2) Hexagon socket head cap screw (M4, length 20)

3) Hexagon socket head cap screw (M4, length 14)

Notes: 1. Be sure to align centerlines when installing motor.
2. Be careful in the assembly orientation of bracket.
3. Because bracket is made by sand casting, external dimensions are for reference only.

Compatible motor	
Maker	Motor models
Yaskawa Electric Corp.	SGMJV-01A(100W), SGMAV-01A(100W), SGMAV-C2A(150W)
Mitsubishi Electric Corp.	HF-KP13(100W), HF-MP13(100W), HC-KFS13(100W), HC-MFS13(100W)
Sanyo Denki Co., Ltd.	P30B04003(30W), P30B04005(50W), P30B04010(100W)

MCM08

Reference Number
MC-BK08-160-00

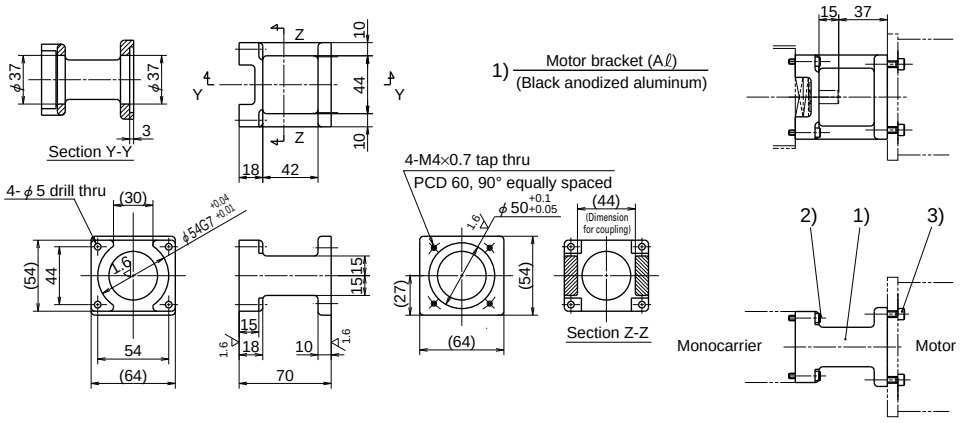

2) Hexagon socket head cap screw (M4, length 20)

3) Hexagon socket head cap screw (M4, length 14)

Notes: 1. Be sure to align centerlines when installing motor.
2. Be careful in the assembly orientation of bracket.
3. Because bracket is made by sand casting, external dimensions are for reference only.

Compatible motor	
Maker	Motor models
Sanyo Denki Co., Ltd.	P50B05005(50W), P50B05010(100W), P50B05020(200W)

MCM08

Reference Number
MC-BK08-170-00

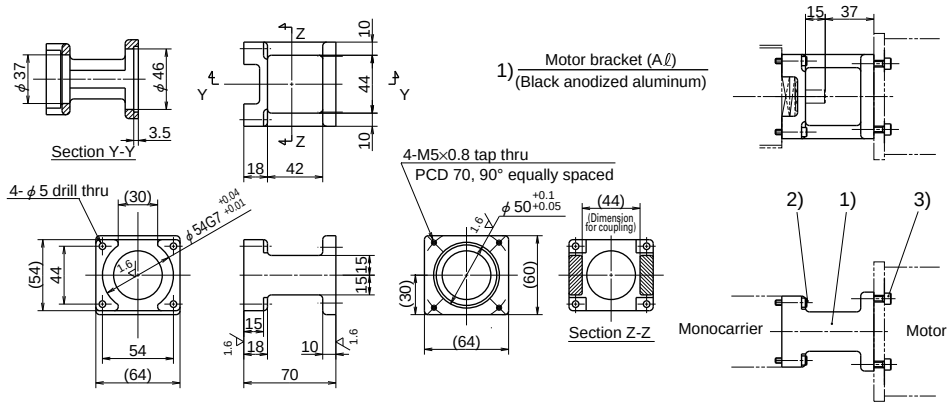

1) Motor bracket (Aℓ) (Black anodized aluminum)

2) Hexagon socket head cap screw (M4, length 20)

3) Hexagon socket head cap screw (M5, length 14)

Notes: 1. Be sure to align centerlines when installing motor.
2. Be careful in the assembly orientation of bracket.
3. Because bracket is made by sand casting, external dimensions are for reference only.

Compatible motor	
Maker	Motor models
Yaskawa Electric Corp.	SGMJV-02A(200W), SGMAV-02A(200W), SGMJV-04A(400W), SGMAV-04A(400W)
Mitsubishi Electric Corp.	HF-KP23(200W), HF-MP23(200W), HF-KP43(400W), HF-MP43(400W), HC-KFS23(200W), HC-MFS23(200W), HC-KFS43(400W), HC-MFS43(400W)
OMRON Corp.	R88M-W20(200W), R88M-W40(400W)
Sanyo Denki Co., Ltd.	P30B06020(200W), P30B06040(400W)

MCM08

Reference Number
MC-BK08-170-01

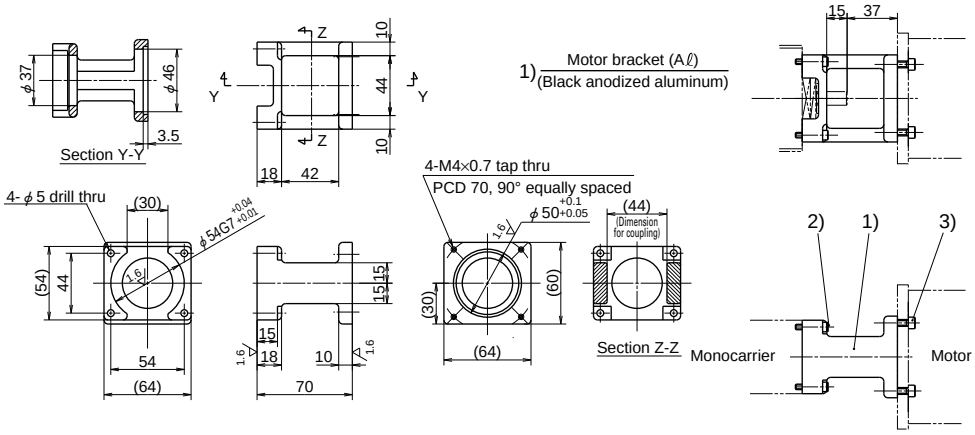

1) Motor bracket (Aℓ) (Black anodized aluminum)

2) Hexagon socket head cap screw (M4, length 20)

3) Hexagon socket head cap screw (M4, length 14)

Notes: 1. Be sure to align centerlines when installing motor.
2. Be careful in the assembly orientation of bracket.
3. Because bracket is made by sand casting, external dimensions are for reference only.

Compatible motor	
Maker	Motor models
Panasonic Co., Ltd.	MSMD02(200W), MAMA02(200W), MSMD04(400W), MAMA04(400WW)

MCM08

Reference Number
MC-BK08-250-00

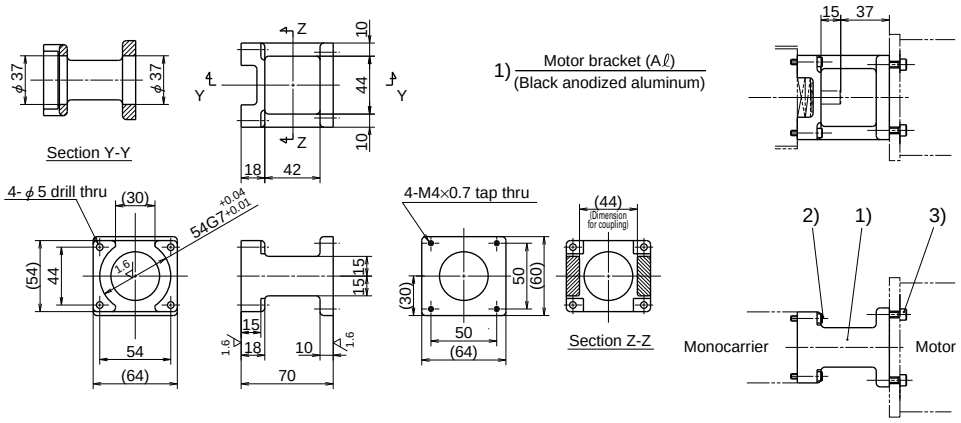

1) Motor bracket (Aℓ)
(Black anodized aluminum)

2) Hexagon socket head cap screw (M4, length 20)

3) Hexagon socket head cap screw (M4, length 14)

Notes: 1. Be sure to align centerlines when installing motor.
2. Be careful in the assembly orientation of bracket.
3. Because bracket is made by sand casting, external dimensions are for reference only.

Compatible motor	
Maker	Motor models
Sanyo Denki Co., Ltd.	PBM603xxx, PBM604xxx, 103F78xx
Oriental Motor Co., Ltd.	AS66, ASC66, UPK56xx, PK56xx, CSK56x, CFK56x, UFK56x

MCM08

Reference Number
MC-BK08-190-00

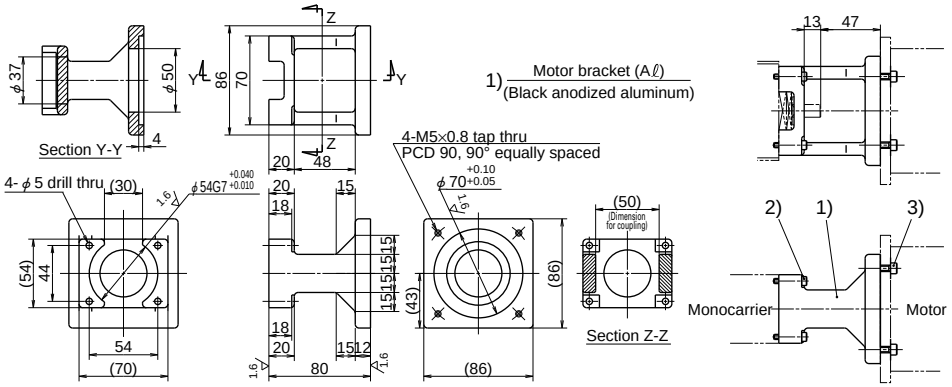

1) Motor bracket (Aℓ)
(Black anodized aluminum)

2) Hexagon socket head cap screw (M4, length 22)

3) Hexagon socket head cap screw (M5, length 16)

Notes: 1. Be sure to align centerlines when installing motor.
2. Be careful in the assembly orientation of bracket.
3. Because bracket is made by sand casting, external dimensions are for reference only.

Compatible motor	
Maker	Motor models
Sanyo Denki Co., Ltd.	P50B07020(200W), P50B07030(300W), P50B07040(400W)

MCM08

Reference Number
MC-BK08-270-00

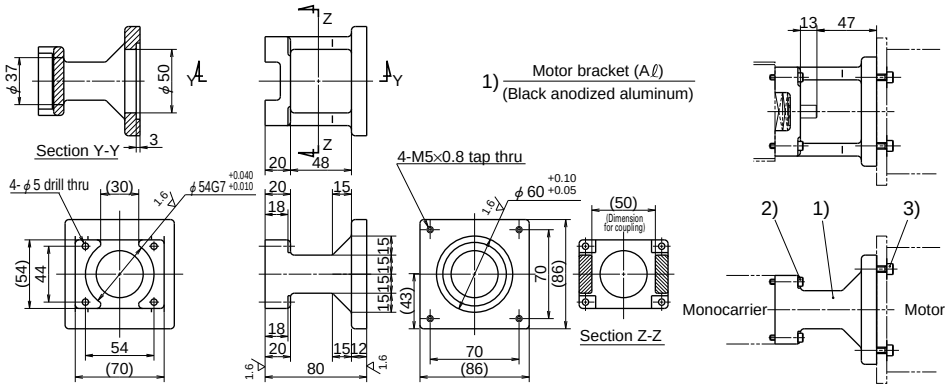

1) Motor bracket (Aℓ) (Black anodized aluminum)

2) Hexagon socket head cap screw (M4, length 22)

3) Hexagon socket head cap screw (M5, length 16)

Notes: 1. Be sure to align centerlines when installing motor.
2. Be careful in the assembly orientation of bracket.
3. Because bracket is made by sand casting, external dimensions are for reference only.

Compatible motor	
Maker	Motor models
Oriental Motor Co., Ltd.	AS98, UPK59x, PK59x, CSK59x, CFK59x, UFK59x
Sanyo Denki Co., Ltd.	103F85xx

MCM10

Reference Number
MC-BK10-170-00

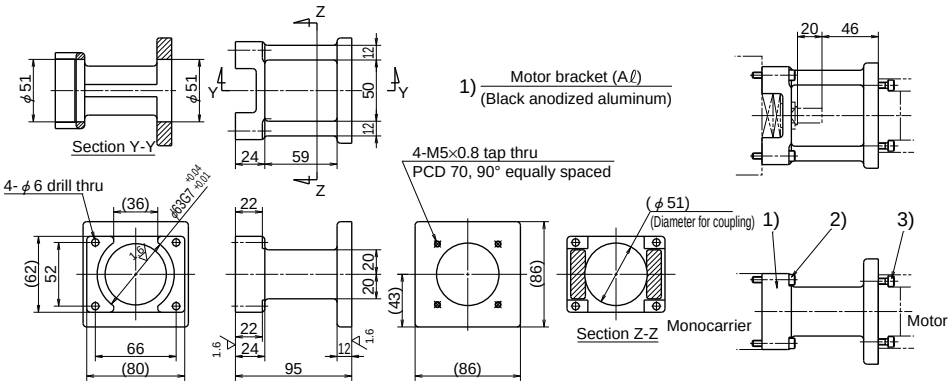

1) Motor bracket (Aℓ) (Black anodized aluminum)

2) Hexagon socket head cap screw (M5, length 30)

3) Hexagon socket head cap screw (M5, length 16)

Notes: 1. Be sure to align centerlines when installing motor.
2. Be careful in the assembly orientation of bracket.
3. Because bracket is made by sand casting, external dimensions are for reference only.

Compatible motor	
Maker	Motor models
Yaskawa Electric Corp.	SGMJV-02A(200W), SGMAV-02A(200W), SGMJV-04A(400W), SGMAV-04A(400W)
Mitsubishi Electric Corp.	HF-KP23(200W), HF-MP23(200W), HF-KP43(400W), HF-MP43(400W), HC-KFS23(200W), HC-MFS23(200W), HC-KFS43(400W), HC-MFS43(400W)
OMRON Corp.	R88M-W20(200W), R88M-W40(400W)
Sanyo Denki Co., Ltd.	P30B06020(200W), P30B06040(400W)

MCM10

Reference Number
MC-BK10-170-01

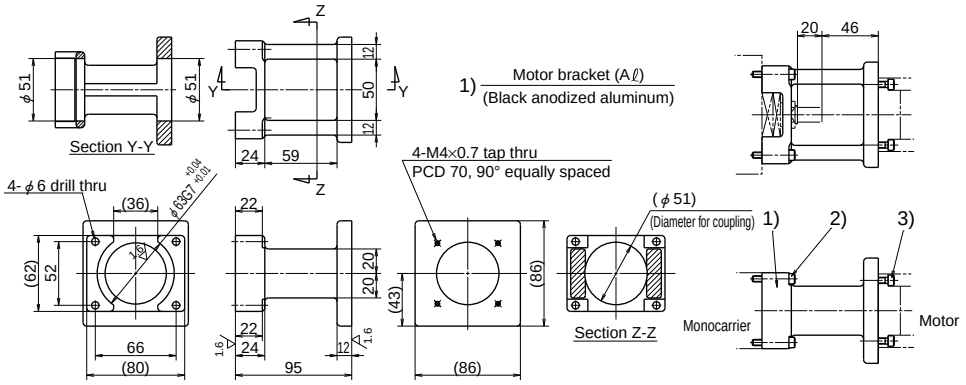

2) Hexagon socket head cap screw (M5, length 30)

3) Hexagon socket head cap screw (M4, length 16)

Notes: 1. Be sure to align centerlines when installing motor.
2. Be careful in the assembly orientation of bracket.
3. Because bracket is made by sand casting, external dimensions are for reference only.

Compatible motor	
Maker	Motor models
Panasonic Co., Ltd.	MSMD02(200W), MAMA02(200W), MSMD04(400W), MAMA04(400W)

MCM10

Reference Number
MC-BK10-190-00

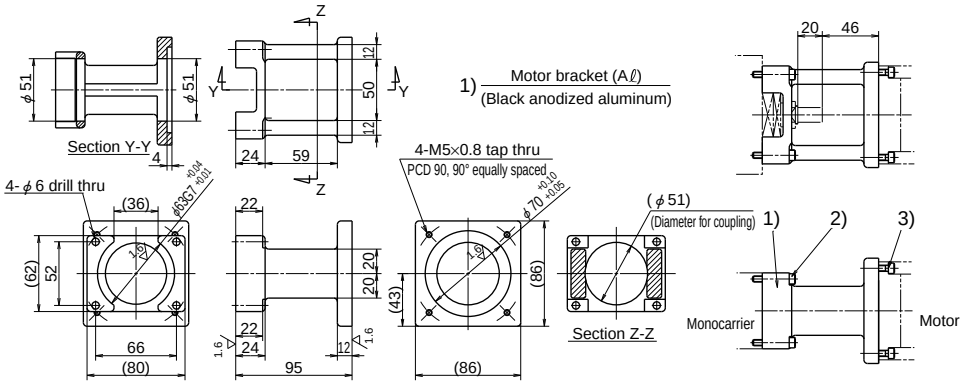

2) Hexagon socket head cap screw (M5, length 30)

3) Hexagon socket head cap screw (M5, length 16)

Notes: 1. Be sure to align centerlines when installing motor.
2. Be careful in the assembly orientation of bracket.
3. Because bracket is made by sand casting, external dimensions are for reference only.

Compatible motor	
Maker	Motor models
Panasonic Co., Ltd.	MSMD08(750W), MAMA08(750W)
Sanyo Denki Co., Ltd.	P50B07020(200W), P50B07030(300W), P50B07040(400W)

MCM10

Reference Number
MC-BK10-270-00

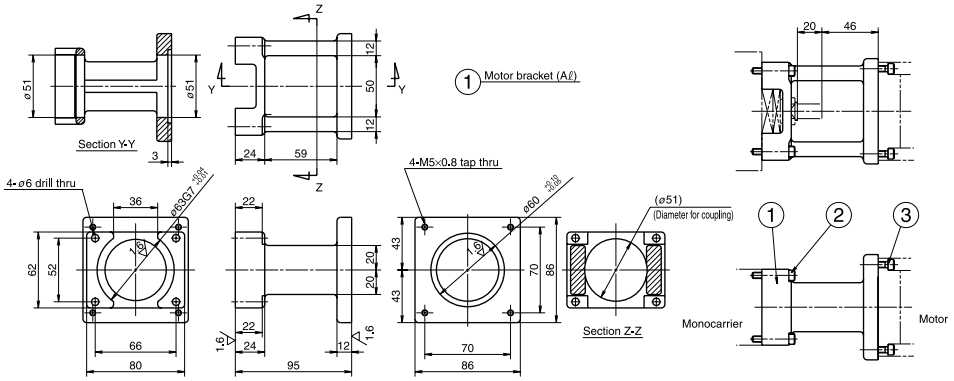

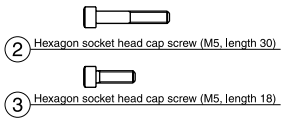

Notes: 1. Be sure to align centerlines when installing motor.
2. Be careful in the assembly orientation of bracket.
3. Because bracket is made by sand casting, external dimensions are for reference only.

Compatible motor	
Maker	Motor models
Sanyo Denki Co., Ltd.	103F85xx
Oriental Motor Co., Ltd.	AS98, UPK59x, PK59x, CSK59x, CFK59x, UFK59x

Motor Brackets for MCM Series by Japanese Motor Manufacturer

Model No.	Reference No. code	Motor bracket reference no.	Motor manufacturer	Stepping motor model no.	Wattage of AC servo motor										
					10	20	30	50	60	100	150	200	300	400	750
MCM02	1	MC-BK02-128-00	Yaskawa Electric Corp.		SGMM-A1	SGMM-A2									
	2	MC-BK02-133-00	Mitsubishi Electric Corp.		HC-AQ013	HC-AQ023									
	3	MC-BK02-223-00	Oriental Motor Co., Ltd.	PMU33/35 (5-phase) PMC33/35 (5-phase)											
MCM03	1	MC-BK03-146-00	Yaskawa Electric Corp.				SGMAH-A3	SGMJV-A5A SGMAV-A5A		SGMJV-01A SGMAV-01A	SGMAV-C2A				
			Mitsubishi Electric Corp.					HF-KP053 HF-MP053 HC-KFS053 HC-MFS053		HF-KP13 HF-MP13 HC-KFS13 HC-MFS13					
			OMRON Corp.				R88M-W03	R88M-W05		R88M-W10					
			Sanyo Denki Co., Ltd.				P30B04003	P30B04005		P30B04010					
	2	MC-BK03-148-01	Sanyo Denki Co., Ltd.						P50B04006	P50B04010					
	3	MC-BK03-231-00	Sanyo Denki Co., Ltd.	PBM423xxx											
			Sanyo Denki Co., Ltd.	103F55xx											
			Oriental Motor Co., Ltd.	AS46, ASC46, UPK54x, PK54x, CSK54x, CFK54x, UMK24x, CSK24x, PK24x											
MCM05	1	MC-BK05-145-00	Panasonic Co., Ltd.					MSMD5A		MSMD01					
	2	MC-BK05-146-00	Yaskawa Electric Corp.				SGMAH-A3	SGMJV-A5A SGMAV-A5A		SGMJV-01A SGMAV-01A	SGMAV-C2A				
			Mitsubishi Electric Corp.					HF-KP053 HF-MP053 HC-KFS053 HC-MFS053		HF-KP13 HF-MP13 HC-KFS13 HC-MFS13					
			OMRON Corp.				R88M-W03	R88M-W05		R88M-W10					
			Sanyo Denki Co., Ltd.				P30B04003	P30B04005		P30B04010					
	3	MC-BK05-148-00	Panasonic Co., Ltd.							MAMA01					
	4	MC-BK05-160-00	Sanyo Denki Co., Ltd.					P50B05005		P50B05010		P50B05020			
	5	MC-BK05-250-00	Sanyo Denki Co., Ltd.	PBM603xx, PB-M604xx											
			Sanyo Denki Co., Ltd.	103F78xx											
			Oriental Motor Co., Ltd.	AS66, ASC66, UPK56x, UFK56x, PK56x, CSK56x, CFK56x											
MCM06	1	MC-BK06-145-00	Panasonic Co., Ltd.					MSMD5A		MSMD01					
	2	MC-BK06-146-00	Yaskawa Electric Corp.					SGMJV-A5A SGMAV-A5A		SGMJV-01A SGMAV-01A	SGMAV-C2A				
			Mitsubishi Electric Corp.					HF-KP053 HF-MP053 HC-KFS053 HC-MFS053		HF-KP13 HF-MP13 HC-KFS13 HC-MFS13					
			OMRON Corp.				R88M-W03	R88M-W05		R88M-W10					
			Sanyo Denki Co., Ltd.				P30B04003	P30B04005		P30B04010					
	3	MC-BK06-148-00	Sanyo Denki Co., Ltd.						P50B04006	P50B04010					
			Panasonic Co., Ltd.							MAMA01					
	4	MC-BK06-160-00	Sanyo Denki Co., Ltd.					P50B05005		P50B05010		P50B05020			
	5	MC-BK06-170-00	Yaskawa Electric Corp.									SGMJV-02A SGMAV-02A		SGMJV-04A SGMAV-04A	
			Mitsubishi Electric Corp.									HF-KP23 HF-MP23 HC-KFS23 HC-MFS23		HF-KP43 HF-MP43 HC-KFS43 HC-MFS43	
			OMRON Corp.									R88M-W20		R88M-W40	
			Sanyo Denki Co., Ltd.									P30B06020		P30B06040	
	6	MC-BK06-170-01	Panasonic Co., Ltd.									MSMD02 MAMA02		MSMD04 MAMA04	
	7	MC-BK06-250-00	Sanyo Denki Co., Ltd.	PBM603xxx, PBM604xxx											
			Sanyo Denki Co., Ltd.	103F78xx											
			Oriental Motor Co., Ltd.	AS66, ASC66, UPK56x, PK56x, CSK56x, CFK56x, UFK56x											
MCM08	1	MC-BK08-145-00	Panasonic Co., Ltd.						MSMD01						
	2	MC-BK08-146-00	Yaskawa Electric Corp.							SGMJV-01A SGMAV-01A	SGMAV-C2A				
			Mitsubishi Electric Corp.							HF-KP13 HF-MP13 HC-KFS13 HC-MFS13					
			Sanyo Denki Co., Ltd.				P30B04003	P30B04005		P30B04010					
	3	MC-BK08-160-00	Sanyo Denki Co., Ltd.					P50B05005		P50B05010		P50B05020			
	4	MC-BK08-170-00	Yaskawa Electric Corp.									SGMJV-02A SGMAV-02A		SGMJV-04A SGMAV-04A	
			Mitsubishi Electric Corp.									HF-KP23 HF-MP23 HC-KFS23 HC-MFS23		HF-KP43 HF-MP43 HC-KFS43 HC-MFS43	
			OMRON Corp.									R88M-W20		R88M-W40	
			Sanyo Denki Co., Ltd.									P30B06020		P30B06040	
	5	MC-BK08-170-01	Panasonic Co., Ltd.									MSMD02 MAMA02		MSMD04 MAMA04	
	6	MC-BK08-190-00	Sanyo Denki Co., Ltd.									P50B07020	P50B07030	P50B07040	
	7	MC-BK08-250-00	Sanyo Denki Co., Ltd.	PBM603xxx, PBM604xxx											
			Sanyo Denki Co., Ltd.	103F78xx											
			Oriental Motor Co., Ltd.	AS66, ASC66, UPK56x, PK56x, CSK56x, CFK56x, UFK56x											
	8	MC-BK08-270-00	Sanyo Denki Co., Ltd.	103F85xx											
			Oriental Motor Co., Ltd.	AS98, UPK59x, PK59x, CSK59x, CFK59x, UFK59x											
MCM10	1	MC-BK10-170-00	Yaskawa Electric Corp.									SGMJV-02A SGMAV-02A		SGMJV-04A SGMAV-04A	
			Mitsubishi Electric Corp.									HF-KP23 HF-MP23 HC-KFS23 HC-MFS23		HF-KP43 HF-MP43 HC-KFS43 HC-MFS43	
			OMRON Corp.									R88M-W20		R88M-W40	
			Sanyo Denki Co., Ltd.									P30B06020		P30B06040	
	2	MC-BK10-170-01	Panasonic Co., Ltd.									MSMD02 MAMA02		MSMD04 MAMA04	
	3	MC-BK10-190-00	Panasonic Co., Ltd.												MSMD08 MAMA08
			Sanyo Denki Co., Ltd.									P50B07020	P50B07030	P50B07040	
	4	MC-BK10-270-00	Sanyo Denki Co., Ltd.	103F85xx											
			Oriental Motor Co., Ltd.	AS98, UPK59x, PK59x, CSK59x, CFK59x, UFK59x											

2.3.4 Combining Brackets

Please ask NSK for bracket not shown.

MCM02 to MCM02 Combining Bracket

Reference Number: MC-IK0202-D-31

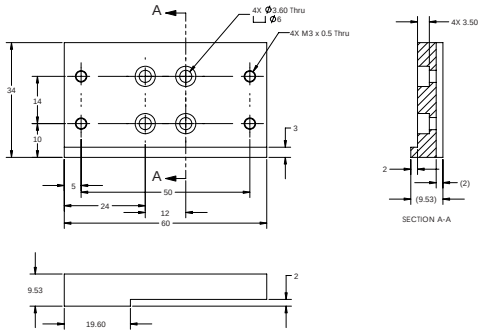

Description	Part Number	Qty
MCM02 to MCM02 Combining Bracket	UB890202D-301	1
M3x6 Socket Head Cap Screw	TAB3x6	4
M3x6 Button Head Cap Screw	GF4-91239A111	4

MCM03 to MCM02 Combining Bracket

Reference Number: MC-IK0302-D-31

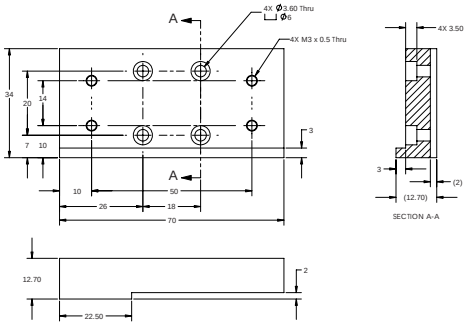

Description	Part Number	Qty
MCM03 to MCM02 Combining Bracket	UB890302D-301	1
M3x8 Socket Head Cap Screw	TAB3x8	4
M3x8 Button Head Cap Screw	GF4-91239A113	4

MCM03 to MCM03 Combining Bracket

Reference Number: MC-IK0303-D-31

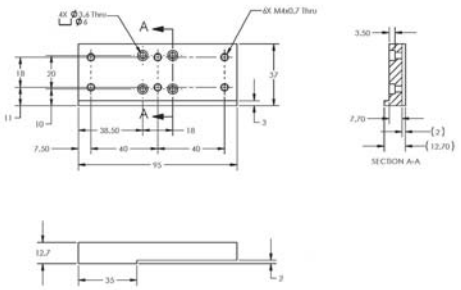

Description	Part Number	Qty
MCM03 to MCM03 Combining Bracket	UB890303D-30X	1
M3x8 Socket Head Cap Screw	TAB3x8	4
M4x8 Socket Head Cap Screw	TAB4x8	6

MCM03 to MCM03 combining bracket can only be used with 1 or 2 mm lead.

MCM05 to MCM03 Combining Bracket

Reference Number: MC-IK0503-D-31

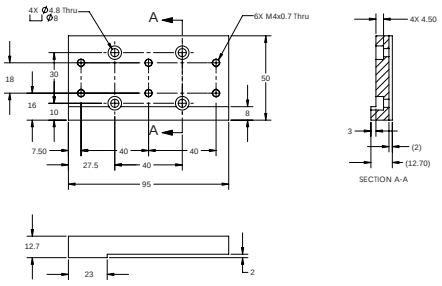

Description	Part Number	Qty
MCM05 to MCM03 Combining Bracket	UB890503D-301	1
M4x8 Socket Head Cap Screw	TAB4x8	10

*When the combining bracket is used, only the top cover and one side cover can be used.

MCM05 to MCM05 Combining Bracket

Reference Number: MC-IK0505-D-32

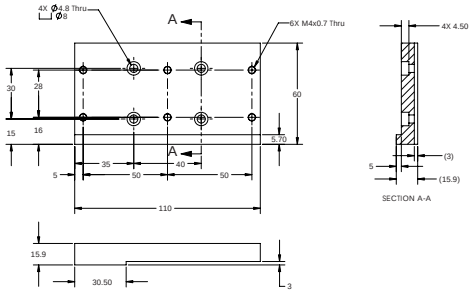

Description	Part Number	Qty
MCM05 to MCM05 Combining Bracket	UB890505D-30x	1
M4x8 Socket Head Cap Screw	TAB4x8	4
M4x12 Socket Head Cap Screw	TAB4x12	6

MCM08 to MCM05 Combining Bracket

Reference Number: MC-IK0805-D-32

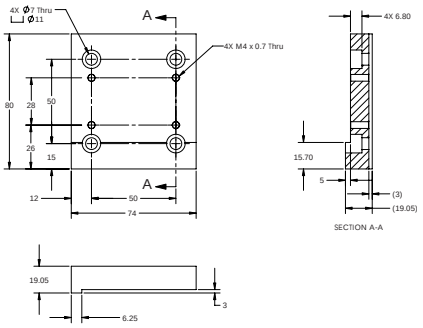

Description	Part Number	Qty
MCM08 to MCM05 Combining Bracket	UB890805D-302	1
M4x12 Socket Head Cap Screw	TAB4x12	4
M6x14 Socket Head Cap Screw	TAB6x14	4

MCM08 to MCM06 Combining Bracket

Reference Number: MC-IK0806-D-31

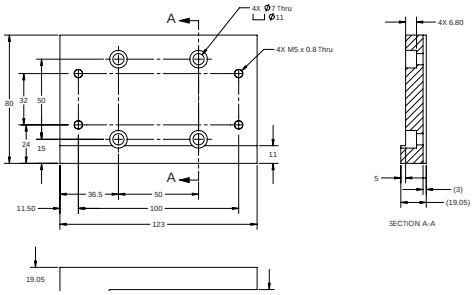

Description	Part Number	Qty
MCM08 to MCM06 Combining Bracket	UB890806D-301	1
M5x16 Socket Head Cap Screw	TAB5x16	4
M6x14 Socket Head Cap Screw	TAB6x14	4

MCM10 to MCM05 Combining Bracket

Reference Number: MC-IK1005-D-31

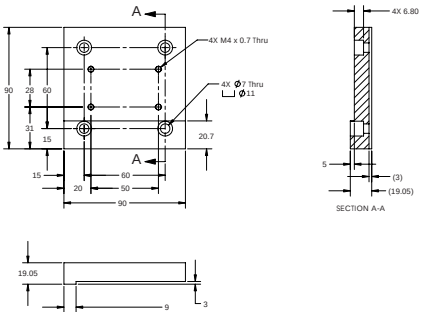

Description	Part Number	Qty
MCM10 to MCM05 Combining Bracket	UB891005D-301	1
M4x12 Socket Head Cap Screw	TAB4x12	4
M6x14 Socket Head Cap Screw	TAB6x14	4

*When the combining bracket is used, only the top cover and one side cover can be used.

MCM10 to MCM06 Combining Bracket

Reference Number: MC-IK1006-D-31

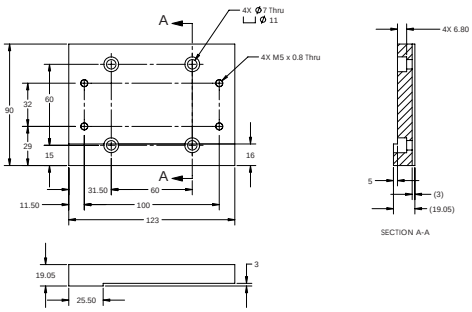

Description	Part Number	Qty
MCM10 to MCM06 Combining Bracket	UB891006D-302	1
M5x16 Socket Head Cap Screw	TAB5x16	4
M6x14 Socket Head Cap Screw	TAB6x14	4

*When the combining bracket is used, only the top cover and one side cover can be used.

MCM10 to MCM08 Combining Bracket

Reference Number: MC-IK1008-D-35

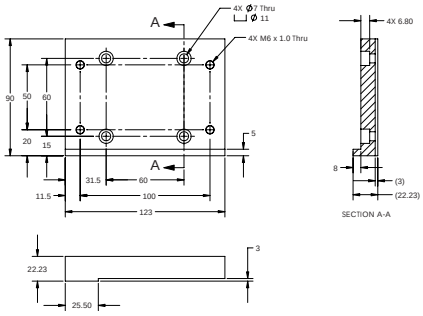

Description	Part Number	Qty
MCM10 to MCM06 Combining Bracket	UB891006D-302	1
M5x16 Socket Head Cap Screw	TAB5x16	4
M6x14 Socket Head Cap Screw	TAB6x14	4

Notes

3.1 MCH Series Reference Number Coding 76
3.2 MCH Series Dimension Table of Standard Products
MCL06 77
MCH06 78
MCH09 80
MCH10 82
3.3 MCH Series Optional Accessories
3.3.1 Sensor Unit 84
3.3.2 Cover Unit 86
3.3.3 Motor Bracket by NEMA Size 89
3.3.4 Intermediate Plate For Motor 91

3 MCH Series

3.1 MCH Series Reference Number Coding

[Body]

MC	H	06	040	H	10	K	(B*1	2)
MONOCARRIER	**SERIES**	**NOMINAL SIZE**	**STROKE**	**ACCURACY GRADE**	**BALL SCREW LEAD**	**SLIDER SPECIFICATION**	**GREASE SPECIFICATION**	**NSK MANAGEMENT NUMBER**
MC: Monocarrier	**H:** MCH Series **L:** MCH Series Low Profile Rail (only for 06 size)	**Rail width, unit:** 10 mm	**Unit:** 10 mm	**H:** High Precision **P:** Precision Grade	**Unit:** mm	**K:** Single slider **D:** Double slider	**B:** Clean Grease LG2	**0** **2**

*1: These two code fields shall be added when non-standard grease is used.

14th digit is control No. of NSK. Customers cannot specify a number.
See the pages of each nominal number for details.

[With Optional Accessories]

MC	S	06 040 H 10 K 0 0	K	0	0	0
	OPTIONAL ACCESSORIES		**NSK MANAGEMENT NUMBER**	**SENSOR UNIT**	**COVER UNIT**	**INTERMEDIATE PLATE FOR MOTOR BRACKET**
	S: With MCH optional components **R:** With MCL optional components					

Note: Optional components are available separately.

Sensor Unit

Reference Number Code	Specification	Reference Number
0	N/A	—
1	Proximity switch (normally close 3 pieces)	MC—SRHxx—10
2	Proximity switch (normally open 3 pieces)	MC—SRHxx—11
3	Proximity switch (normally open 1 piece, normally close 2 pieces)	MC—SRHxx—12
4	Photo sensor 3 pieces	MC—SRHxx—13

Notes: 1). xx: Nominal size.
2). Sensor rail is not included in sensor unit. If you require rail, please specify when ordering.

Cover Unit

Reference Number Code	Specification	Reference Number
0	N/A	—
1	For single slider For double slider	MC—HVxxxxx—00 MC—HVxxxxxD00

Note xxxxx: Nominal size and stroke number

Intermediate Plate for Motor Bracket

Reference Number Code	Type		
	MCH06 (MCL06)	MCH09	MCH10
0	N/A	N/A	N/A
1	MC-BKH06-145-00	MC-BKH09-145-00	MC-BKH10-170-00
2	MC-BKH06-146-00	MC-BKH09-146-00	MC-BKH10-170-01
3	MC-BKH06-231-00	MC-BKH09-170-00	MC-BKH10-190-00
4	MC-BKH06-250-00	MC-BKH09-170-01	MC-BKH10-190-01
5	—	MC-BKH09-231-00	MC-BKH10-250-00
6	—	MC-BKH09-250-00	MC-BKH10-270-00

3.2 MCH Series Dimension Table of Standard Products

MCL06

Accuracy Grade: High Grade (H)

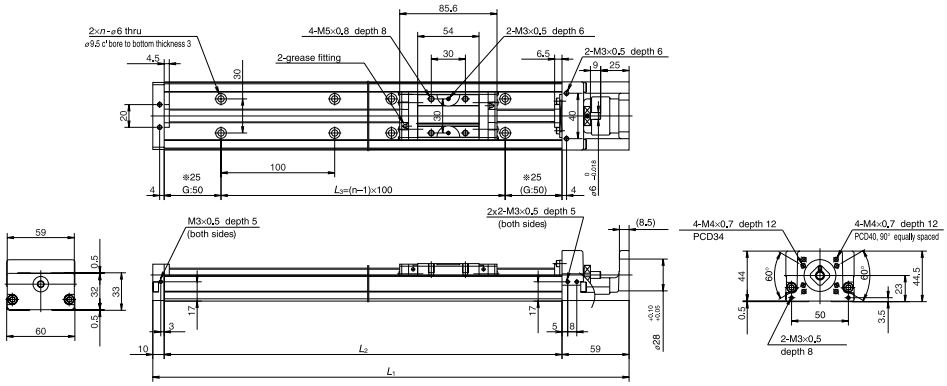

- The rail of MCL06 is made lighter than that of MCH06 by lowering the rail height. The weight ratio between the MCH06 and MCL06 is 5 to 4.
- Double slider specification is also available for the MCL06.
- Combinations of stroke and ball screw lead of the MCL06 are the same as those of the MCH06.

Dimension of MCL06 (Single Slider)

Reference number	Nominal stroke (mm)	Stroke limit (mm) (K1™ is not equipped)	Ball screw lead (mm)	Body length (mm)			No. of mounting holes	Inertia ×10⁻⁶ (kg・m²)	Mass (kg)
				L_1	L_2	L_3	n		
*MCL06005H05K02 *MCL06005H10K02	50	53 (65)	5 10	219	150	100	2	2.38 3.45	1.0
MCL06010H05K02 MCL06010H10K02	100	103 (115)	5 10	269	200	100	2	3.17 4.12	1.3
MCL06020H05K02 MCL06020H10K02	200	203 (215)	5 10	369	300	200	3	4.51 5.46	1.9
MCL06030H10K02 MCL06030H20K02	300	303 (315)	10 20	469	400	300	4	6.80 10.60	2.6
MCL06040H10K02 MCL06040H20K02	400	403 (415)	10 20	569	500	400	5	8.13 11.90	3.2
MCL06050H10K02 MCL06050H20K02	500	503 (515)	10 20	669	600	500	6	9.47 13.30	3.9

Notes: 1). Dimension G is 45 for items marked with *.
2). The nominal number in the above table is for high-grade grease specifications. In the case of other specifications, see the following table for the 13th and 14th digits.

Coding for columns 13 and 14

Grease	High-grade	Precision-grade
Standard	02	(None)
LG2	B2	B0

Monocarrier dynamic torque specification (N・cm)		
Ball screw lead (mm)	5	1.0 - 4.8
	10	1.1 - 5.8
	20	1.6 - 7.9

1. Frictional resistance of NSK K1 is included in dynamic torque in table.
2. Grease is packed into ball screw, linear guide parts and support unit.
3. Consult NSK for life estimates under large moment loads.

Basic Load Rating

Lead	Shaft dia	Basic dynamic load rating (N)				Basic static load rating (N)		Support unit Load limit (N)
ℓ (mm)	d (mm)	Ball screw C_a	Linear guides C	Support unit C_a	Rated running distance L_a (km)	Ball screw C_{0a}	Linear guides C_0	
5	Ø12	3,760	22,800	4,400	5	6,310	16,300	1,450
10		2,420	18,100		10	3,790		
20		2,420	14,400		20	3,790		

Basic Static Moment Load of Linear Guide

Slider	Basic static moment load (N・m)		
	Rolling M_{R0}	Pitching M_{P0}	Yawing M_{Y0}
Single	335	133	133

MCH06

Accuracy Grade: High Grade (H)

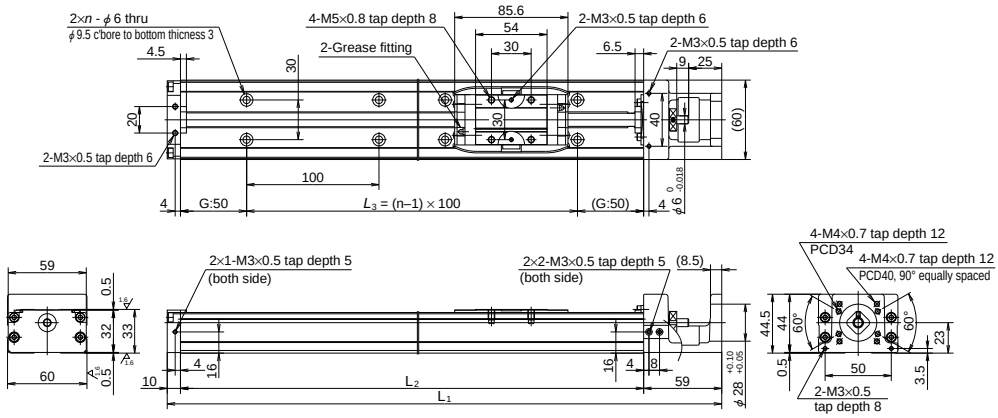

Dimension of MCH06 (Single Slider)

Reference number	Nominal stroke (mm)	Stroke limit (mm) (without K1™)	Ball screw lead (mm)	Body length (mm)			No. of mounting holes	Inertia ×10⁻⁶ (kg・m²)	Mass (kg)
				L_1	L_2	L_3	n		
*MCH06005H05K02			5					2.38	
*MCH06005H10K02	50	53 (65)	10	219	150	100	2	3.45	1.8
*MCH06005H20K02			20					7.25	
MCH06010H05K02			5					3.17	
MCH06010H10K02	100	103 (115)	10	269	200	100	2	4.12	2.2
MCH06010H20K02			20					7.92	
MCH06020H05K02			5					4.51	
MCH06020H10K02	200	203 (215)	10	369	300	200	3	5.46	3.0
MCH06020H20K02			20					9.26	
MCH06030H05K02			5					5.85	
MCH06030H10K02	300	303 (315)	10	469	400	300	4	6.8	3.7
MCH06030H20K02			20					10.6	
MCH06040H05K02			5					7.18	
MCH06040H10K02	400	403 (415)	10	569	500	400	5	8.13	4.5
MCH06040H20K02			20					11.9	
MCH06050H05K02			5					8.52	
MCH06050H10K02	500	503 (515)	10	669	600	500	6	9.47	5.2
MCH06050H20K02			20					13.3	

Notes: 1). Dimension G is 45 for items marked with *.
2). The nominal number in the above table is for high-grade grease specifications. In the case of other specifications, see the following table for the 13th and 14th digits.

Coding for columns 13 and 14

Grease	High-grade	Precision-grade
Standard	02	(None)
LG2	B2	B0

Monocarrier dynamic torque specification (N・cm)		
Ball screw lead (mm)	5	1.0 - 4.8
	10	1.1 - 5.8
	20	1.6 - 7.9

1. Frictional resistance of NSK K1 is included in dynamic torque in table.
2. Grease is packed into ball screw, linear guide parts and support unit.
3. Consult NSK for life estimates under large moment loads.

Basic Load Rating

Lead	Shaft dia	Basic dynamic load rating (N)				Basic static load rating (N)		Support unit Load limit (N)
ℓ (mm)	d (mm)	Ball screw C_a	Linear guides C	Support unit C_a	Rated running distance L_a (km)	Ball screw C_{0a}	Linear guides C_0	
5	Ø12	3,760	22,800	4,400	5	6,310	16,300	1,450
10		2,420	18,100		10	3,790		
20		2,420	14,400		20	3,790		

Basic Static Moment Load of Linear Guide

Slider	Basic static moment load (N・m)		
	Rolling M_{R0}	Pitching M_{P0}	Yawing M_{Y0}
Single	335	133	133

MCH06 (Double Slider)

Accuracy Grade: High Grade (H)

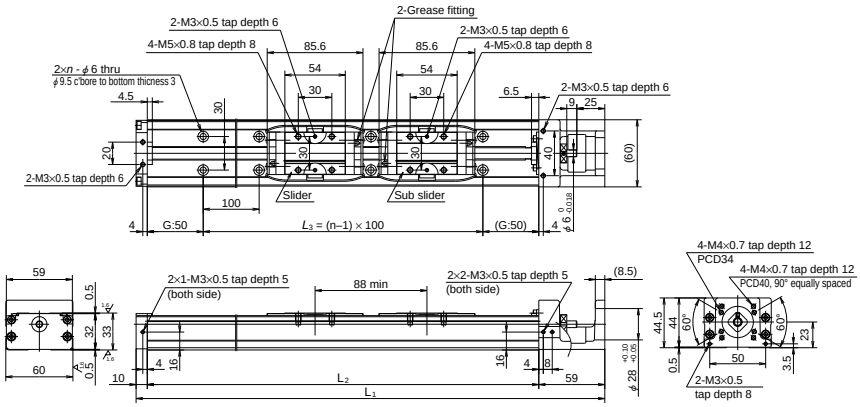

Dimension of MCH06 (Double Slider)

Reference number	Nominal stroke (mm)	Stroke limit (mm) (K1™ is not equipped)	Ball screw lead (mm)	Body length (mm)			No. of mounting holes	Inertia ×10⁻⁶ (kg・m²)	Mass (kg)
				L_1	L_2	L_3	n		
MCH06010H05D02	100	115 (139)	5	369	300	200	3	4.82	3.5
MCH06010H10D02			10					6.72	
MCH06020H05D02	200	215 (239)	5	469	400	300	4	8.06	4.2
MCH06020H10D02			10					15.7	
MCH06030H05D02	300	315 (339)	5	569	500	400	5	9.4	5.0
MCH06030H10D02			10					17.0	
MCH06040H10D02	400	415 (439)	10	669	600	500	6	10.7	5.7
MCH06040H20D02			20					18.3	

Note: The nominal number in the above table is for high-grade grease specifications. In the case of other specifications, see the following table for the 13th and 14th digits.

Coding for columns 13 and 14

Grease	High-grade	Precision-grade
Standard	02	(None)
LG2	B2	B0

Monocarrier dynamic torque specification (N・cm)		
Ball screw lead (mm)	5	1.2 - 5.2
	10	1.5 - 9.6
	20	2.3 - 11.8

1. Frictional resistance of NSK K1 is included in dynamic torque in table.
2. Grease is packed into ball screw, linear guide parts and support unit.
3. Consult NSK for life estimates under large moment loads.

Basic Load Rating

Lead	Shaft dia	Basic dynamic load rating (N)				Basic static load rating (N)		Support unit Load limit (N)
ℓ (mm)	d (mm)	Ball screw C_a	Linear guides C	Support unit C_a	Rated running distance L_a (km)	Ball screw C_{0a}	Linear guides C_0	
5	Ø12	3,760	22,800	4,400	5	6,310	16,300	1,450
10		2,420	18,100		10	3,790		
20		2,420	14,400		20	3,790		

Basic Static Moment Load of Linear Guide

Slider	Basic static moment load (N・m)		
	Rolling M_{R0}	Pitching M_{P0}	Yawing M_{Y0}
Double	770	730	730

MCH09

Accuracy Grade: High Grade (H)

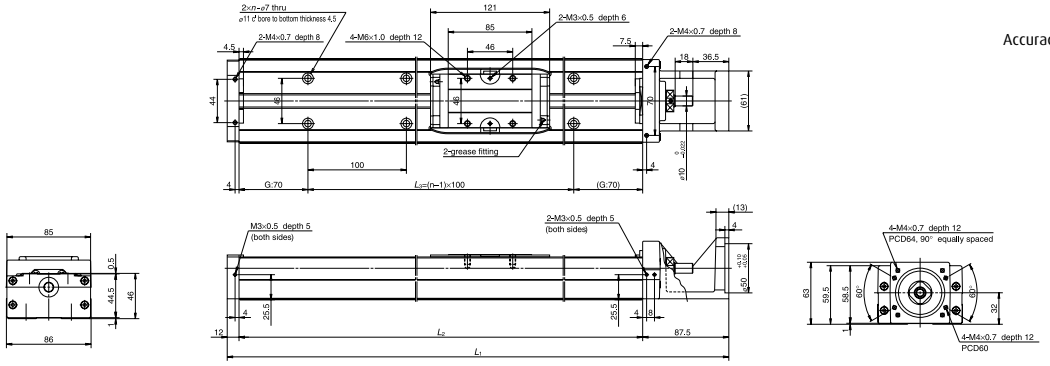

Dimension of MCH09 (Single Slider)

Reference number	Nominal stroke (mm)	Stroke limit (mm) (without K1™)	Ball screw lead (mm)	Body length (mm)			No. of mounting holes	Inertia ×10⁻⁶ (kg・m²)	Mass (kg)
				L_1	L_2	L_3	n		
MCH09010H05K02			5					9.2	
MCH09010H10K02	100	107 (121)	10	339.5	240	100	2	10.7	5.0
MCH09010H20K02			20					16.8	
MCH09020H05K02			5					12.4	
MCH09020H10K02	200	207 (221)	10	439.5	340	200	3	13.9	6.5
MCH09020H20K02			20					20.0	
MCH09030H05K02			5					15.6	
MCH09030H10K02	300	307 (321)	10	539.5	440	300	4	17.1	8.1
MCH09030H20K02			20					23.2	
MCH09040H05K02			5					18.8	
MCH09040H10K02	400	407 (421)	10	639.5	540	400	5	20.3	9.7
MCH09040H20K02			20					26.4	
MCH09050H05K02			5					22.0	
MCH09050H10K02	500	507 (521)	10	739.5	640	500	6	23.5	11.0
MCH09050H20K02			20					29.6	
MCH09060H05K02			5					25.2	
MCH09060H10K02	600	607 (621)	10	839.5	740	600	7	26.7	13.0
MCH09060H20K02			20					32.8	
MCH09070H05K02			5					28.4	
MCH09070H10K02	700	707 (721)	10	939.5	840	700	8	30.0	14.5
MCH09070H20K02			20					36.0	
MCH09080H05K02			5					31.6	
MCH09080H10K02	800	807 (821)	10	1,039.50	940	800	9	33.2	16.0
MCH09080H20K02			20					39.2	

Note: The nominal number in the above table is for high-grade grease specifications. In the case of other specifications, see the following table for the 13th and 14th digits.

Coding for columns 13 and 14

Grease	High-grade	Precision-grade
Standard	02	(None)
LG2	B2	B0

Monocarrier dynamic torque specification (N・cm)		
Ball screw lead (mm)	5	1.0 - 5.9
	10	2.0 - 7.8
	20	2.0 - 10.8

1. Frictional resistance of NSK K1 is included in dynamic torque in table.
2. Grease is packed into ball screw, linear guide parts and support unit.
3. Consult NSK for life estimates under large moment loads.

Basic Load Rating

Lead	Shaft dia	Basic dynamic load rating (N)				Basic static load rating (N)		Support unit Load limit (N)
ℓ (mm)	d (mm)	Ball screw C_a	Linear guides C	Support unit C_a	Rated running distance L_a (km)	Ball screw C_{0a}	Linear guides C_0	
5	Ø15	7,070	40,600	7,100	5	12,800	30,500	3,040
10		7,070	32,200		10	12,800		
20		4,560	25,500		20	7,730		

Basic Static Moment Load of Linear Guide

Slider	Basic static moment load (N・m)		
	Rolling M_{R0}	Pitching M_{P0}	Yawing M_{Y0}
Single	890	385	385

MCH09 (Double Slider)

Accuracy Grade: High Grade (H)

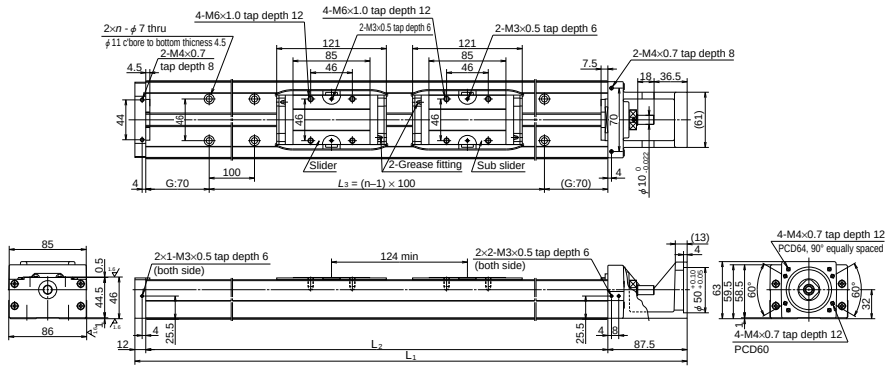

Dimension of MCH09 (Double Slider)

Reference number	Nominal stroke (mm)	Stroke limit (mm) (K1™ is not equipped)	Ball screw lead (mm)	Body length (mm)			No. of mounting holes	Inertia ×10⁻⁶ (kg・m²)	Mass (kg)
				L_1	L_2	L_3	n		
MCH09015H05D02	150	183 (211)	5	539.5	440	300	4	16.1	8.9
MCH09015H10D02			10					19.2	
MCH09025H05D02	250	283 (311)	5	639.5	540	400	5	19.3	11.0
MCH09025H10D02			10					22.4	
MCH09035H05D02	350	383 (411)	5	739.5	640	500	6	22.5	12.0
MCH09035H10D02			10					25.6	
MCH09045H10D02	450	483 (511)	10	839.5	740	600	7	28.8	14.0
MCH09045H20D02			20					40.9	
MCH09065H10D02	650	683 (711)	10	1,039.5	940	800	9	35.2	17.0
MCH09065H20D02			20					47.3	

Note: The nominal number in the above table is for high-grade grease specifications. In the case of other specifications, see the following table for the 13th and 14th digits.

Coding for columns 13 and 14

Grease	High-grade	Precision-grade
Standard	02	(None)
LG2	B2	B0

Monocarrier dynamic torque specification (N・cm)		
Ball screw lead (mm)	5	1.5 - 7.0
	10	2.5 - 10.8
	20	4.0 - 17.2

1. Frictional resistance of NSK K1 is included in dynamic torque in table.
2. Grease is packed into ball screw, linear guide parts and support unit.
3. Consult NSK for life estimates under large moment loads.

Basic Load Rating

Lead	Shaft dia	Basic dynamic load rating (N)				Basic static load rating (N)		Support unit Load limit (N)
ℓ (mm)	d (mm)	Ball screw C_a	Linear guides C	Support unit C_a	Rated running distance L_a (km)	Ball screw C_{0a}	Linear guides C_0	
5	Ø15	7,070	40,600	7,100	5	12,800	30,500	3,040
10		7,070	32,200		10	12,800		
20		4,560	25,500		20	7,730		

Basic Static Moment Load of Linear Guide

Slider	Basic static moment load (N・m)		
	Rolling M_{R0}	Pitching M_{P0}	Yawing M_{Y0}
Double	1,780	2,070	2,070

MCH10

Accuracy Grade: High Grade (H)

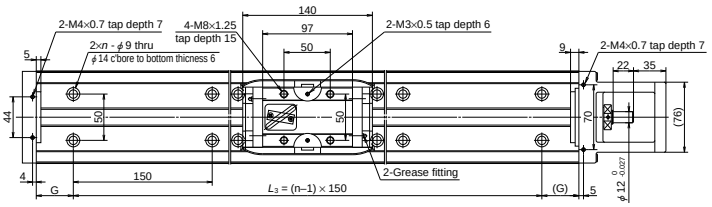

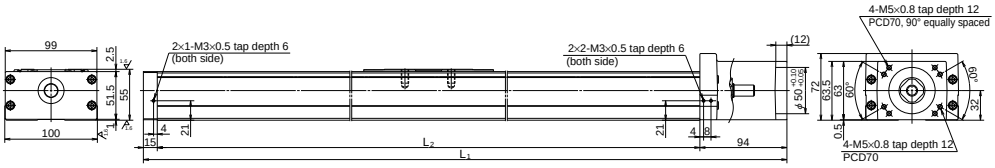

Dimension of MCH10 (Single Slider)

Reference number	Nominal stroke (mm)	Stroke limit (mm) (without K1[TM])	Ball screw lead (mm)	Body length (mm)				No. of mounting holes	Inertia ×10^{-6} (kg・m^2)	Mass (kg)
				L_1	L_2	G	L_3	n		
MCH10010H10K02	100	126 (142)	10	389	280	65	150	2	33.2	7.3
MCH10010H20K02			20						41.1	
MCH10020H10K02	200	226 (242)	10	489	380	40	300	3	43.4	9.5
MCH10020H20K02			20						51.3	
MCH10030H10K02	300	326 (342)	10	589	480	15	450	4	53.7	12.0
MCH10030H20K02			20						61.6	
MCH10040H10K02	400	426 (442)	10	689	580	65	450	4	62.4	14.0
MCH10040H20K02			20						71.8	
MCH10050H10K02	500	526 (542)	10	789	680	40	600	5	74.7	16.0
MCH10050H20K02			20						82.3	
MCH10060H10K02	600	626 (642)	10	889	780	15	750	6	84.9	19.0
MCH10060H20K02			20						92.5	
MCH10070H10K02	700	726 (742)	10	989	880	65	750	6	95.1	21.0
MCH10070H20K02			20						103	
MCH10080H10K02	800	826 (842)	10	1,089	980	40	900	7	105	23.0
MCH10080H20K02			20						113	
MCH10090H10K02	900	926 (842)	10	1,189	1,080	15	1,050	8	116	25.0
MCH10090H20K02			20						123	
MCH10100H10K02	1,000	1,026 (1,042)	10	1,289	1,180	65	1,050	8	126	27.0
MCH10100H20K02			20						133	
MCH10110H10K02	1,100	1,126 (1,142)	10	1,389	1,280	40	1,200	9	136	29.0
MCH10110H20K02			20						143	
MCH10120H10K02	1,200	1,226 (1,242)	10	1,489	1,380	15	1,350	10	146	32.0
MCH10120H20K02			20						154	

Note: The nominal number in the above table is for high-grade grease specifications. In the case of other specifications, see the following table for the 13th and 14th digits.

Coding for columns 13 and 14

Grease	High-grade	Precision-grade
Standard	02	(None)
LG2	B2	B0

Monocarrier dynamic torque specification (N・cm)		
Ball screw lead (mm)	10	2.7 - 10.8
	20	3.1 - 12.7

1. Frictional resistance of NSK K1 is included in dynamic torque in table.
2. Grease is packed into ball screw, linear guide parts and support unit.
3. Consult NSK for life estimates under large moment loads.

Basic Load Rating

Lead	Shaft dia	Basic dynamic load rating (N)				Basic static load rating (N)		Support unit Load limit (N)
ℓ (mm)	d (mm)	Ball screw C_a	Linear guides C	Support unit C_a	Rated running distance L_a (km)	Ball screw C_{0a}	Linear guides C_0	
10	Ø20	11,000	44,600	7,600	10	21,100	42,000	3,380
20		7,060	35,400		20	12,700		

Basic Static Moment Load of Linear Guide

Slider	Basic static moment load (N・m)		
	Rolling M_{R0}	Pitching M_{P0}	Yawing M_{Y0}
Single	1,460	610	610

MCH10 (Double Slider)

Accuracy Grade: High Grade (H)

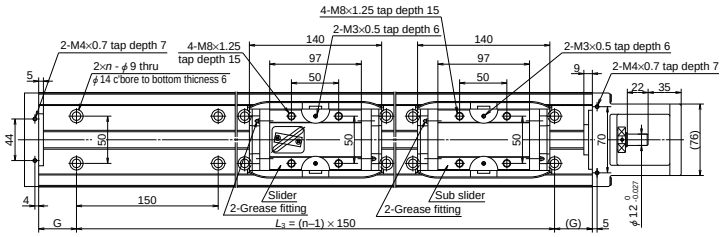

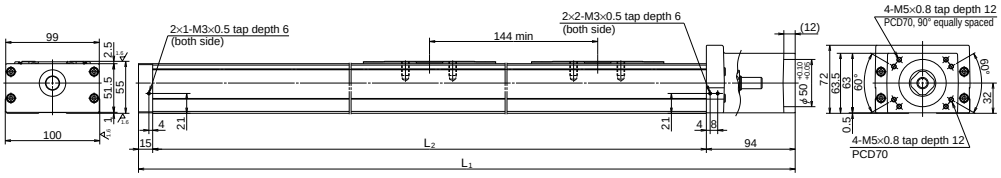

Dimension of MCH10 (Double Slider)

Reference number	Nominal stroke (mm)	Stroke limit (mm) (K1™ is not equipped)	Ball screw lead (mm)	Body length (mm)				No. of mounting holes	Inertia ×10⁻⁶ (kg・m²)	Mass (kg)
				L_1	L_2	G	L_3	n		
MCH10025H10D02	250	282 (314)	10	689	580	65	450	4	67.1	15
MCH10025H20D02			20						82.4	
MCH10035H10D02	350	382 (414)	10	789	680	40	600	5	77.3	17
MCH10035H20D02			20						92.5	
MCH10045H10D02	450	482 (514)	10	889	780	15	750	6	87.5	20
MCH10045H20D02			20						103	
MCH10055H10D02	550	582 (614)	10	989	880	65	750	6	97.7	22
MCH10055H20D02			20						113.0	
MCH10065H10D02	650	682 (714)	10	1,089	980	40	900	7	108.0	24
MCH10065H20D02			20						123.0	
MCH10075H20D02	750	782 (814)	20	1,189	1,080	15	1,050	8	133.0	26
MCH10085H20D02	850	882 (914)	20	1,289	1,180	65	1,050	8	143.0	28
MCH10095H20D02	950	982 (1,014)	20	1,389	1,280	40	1,200	9	154.0	30
MCH10105H20D02	1,050	1,082 (1,114)	20	1,489	1,380	15	1,350	10	164.0	33

Note: The nominal number in the above table is for high-grade grease specifications. In the case of other specifications, see the following table for the 13th and 14th digits.

Coding for columns 13 and 14

Grease	High-grade	Precision-grade
Standard	02	(None)
LG2	B2	B0

Monocarrier dynamic torque specification (N・cm)		
Ball screw lead (mm)	10	4.2 - 15.6
	20	5.0 - 19.6

1. Frictional resistance of NSK K1 is included in dynamic torque in table.
2. Grease is packed into ball screw, linear guide parts and support unit.
3. Consult NSK for life estimates under large moment loads.

Basic Load Rating

Lead	Shaft dia	Basic dynamic load rating (N)				Basic static load rating (N)		Support unit Load limit (N)
ℓ (mm)	d (mm)	Ball screw C_a	Linear guides C	Support unit C_a	Rated running distance L_a (km)	Ball screw C_{0a}	Linear guides C_0	
10	Ø20	11,000	44,600	7,600	10	21,100	42,000	3,380
20		7,060	35,400		20	12,700		

Basic Static Moment Load of Linear Guide

Slider	Basic static moment load (N・m)		
	Rolling M_{R0}	Pitching M_{P0}	Yawing M_{Y0}
Single	2,920	3,430	3,430

3.3 MCH Series Optional Accessories
3.3.1 Sensor Unit

Proximity Switch

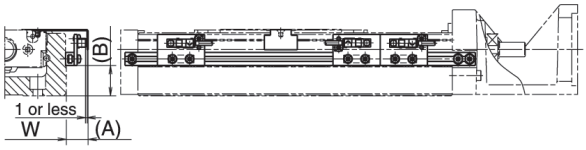

(Example of assembly)

Type		Reference Number			Dimension (A) (mm)	Dimension (B) (mm)	Body width W (mm)
MCH06		MC-SRH06-10	MC-SRH06-11	MC-SRH06-12	17	10	60
MCH09		MC-SRH09-10	MC-SRH09-11	MC-SRH09-12	16	21	86
MCH10		MC-SRH10-10	MC-SRH10-11	MC-SRH10-12	16	16	100
Quantity	Proximity switch (normally open contact)	—	3	1		E2S-W13 (OMRON Corp.)	
	Proximity switch (normally close contact)	3	—	2		E2S-W14 (OMRON Corp.)	

Photo Sensor

Sensor rail is not included in a sensor unit.

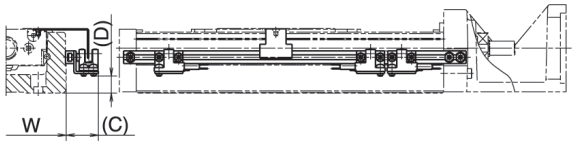

(Example of assembly)

Type	NPN Sensor Reference Number	PNP Sensor Reference Number	Dimension (C) (mm)	Dimension (D) (mm)	Body width W (mm)	Remarks
MCH06	MC-SRH06-13	MC-SRH06-36	24	2	60	EE-SX674 (OMRON Corp.) EE-SX674P (OMRON Corp.) 3 sets (EE-1001 connector attachment)
MCH09	MC-SRH09-13	MC-SRH09-40	23	12	86	
MCH10	MC-SRH10-13	MC-SRH10-31	23	16	100	

Sensor Rail

Reference Number: MC-SRL- * * * *

* * * * is the same as rail dimension L2.

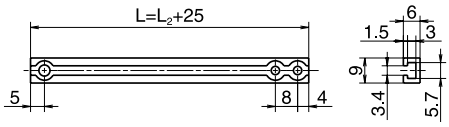

MCH Series and Sensor Rail Combination Table

Model No.	Body length L_2 (mm)	Reference No.	Sensor rail reference No.
MCH06	150	MCH06005H05K02 MCH06005H10K02 MCH06005H20K02	MC-SRL-0150
	200	MCH06010H05K02 MCH06010H10K02 MCH06010H20K02	MC-SRL-0200
	300	MCH06020H05K02 MCH06020H10K02 MCH06020H20K02 MCH06010H05D02 MCH06010H10D02	MC-SRL-0300
	400	MCH06030H05K02 MCH06030H10K02 MCH06030H20K02 MCH06020H05D02 MCH06020H10D02	MC-SRL-0400
	500	MCH06040H05K02 MCH06040H10K02 MCH06040H20K02 MCH06030H05D02 MCH06030H10D02	MC-SRL-0500
	600	MCH06050H05K02 MCH06050H10K02 MCH06050H20K02 MCH06040H10D02 MCH06040H20D02	MC-SRL-0600
MCL06	150	MCL06005H05K02 MCL06005H10K02	MC-SRL-0150
	200	MCL06010H05K02 MCL06010H10K02	MC-SRL-0200
	300	MCL06020H05K02 MCL06020H10K02	MC-SRL-0300
	400	MCL06030H10K02 MCL06030H20K02	MC-SRL-0400
	500	MCL06040H10K02 MCL06040H20K02	MC-SRL-0500
	600	MCL06050H10K02 MCL06050H20K02	MC-SRL-0600
MCH09	240	MCH09010H05K02 MCH09010H10K02 MCH09010H20K02	MC-SRL-0240
	340	MCH09020H05K02 MCH09020H10K02 MCH09020H20K02	MC-SRL-0340
	440	MCH09030H05K02 MCH09030H10K02 MCH09030H20K02 MCH09015H05D02 MCH09015H10D02	MC-SRL-0440
	540	MCH09040H05K02 MCH09040H10K02 MCH09040H20K02 MCH09025H05D02 MCH09025H10D02	MC-SRL-0540
	640	MCH09050H05K02 MCH09050H10K02 MCH09050H20K02 MCH09035H05D02 MCH09035H10D02	MC-SRL-0640
	740	MCH09060H05K02 MCH09060H10K02 MCH09060H20K02 MCH09045H10D02 MCH09045H20D02	MC-SRL-0740

Model No.	Body length L_2 (mm)	Reference No.	Sensor rail reference No.
MCH09	840	MCH09070H05K02 MCH09070H10K02 MCH09070H20K02	MC-SRL-0840
	940	MCH09080H05K02 MCH09080H10K02 MCH09080H20K02 MCH09065H10D02 MCH09065H20D02	MC-SRL-0940
MCH10	280	MCH10010H10K02 MCH10010H20K02	MC-SRL-0280
	380	MCH10020H10K02 MCH10020H20K02	MC-SRL-0380
	480	MCH10030H10K02 MCH10030H20K02	MC-SRL-0480
	580	MCH10040H10K02 MCH10025H10D02	MC-SRL-0580
	680	MCH10050H10K02 MCH10050H20K02 MCH10035H10D02 MCH10035H20D02	MC-SRL-0680
	780	MCH10060H10K02 MCH10060H20K02 MCH10045H10D02 MCH10045H20D02	MC-SRL-0780
	880	MCH10070H10K02 MCH10070H20K02 MCH10055H10D02 MCH10055H20D02	MC-SRL-0880
	980	MCH10080H10K02 MCH10080H20K02 MCH10065H10D02 MCH10065H20D02	MC-SRL-0980
	1,080	MCH10090H10K02 MCH10090H20K02 MCH10075H20D02	MC-SRL-1080
	1,180	MCH10100H10K02 MCH10100H20K02 MCH10085H20D02	MC-SRL-1180
	1,280	MCH10110H10K02 MCH10110H20K02 MCH10095H20D02	MC-SRL-1280
	1,380	MCH10120H10K02 MCH10120H20K02 MCH10105H20D02	MC-SRL-1380

3.3.2 Cover Unit

Cover Unit for MCH06

Cover Unit for MCL06

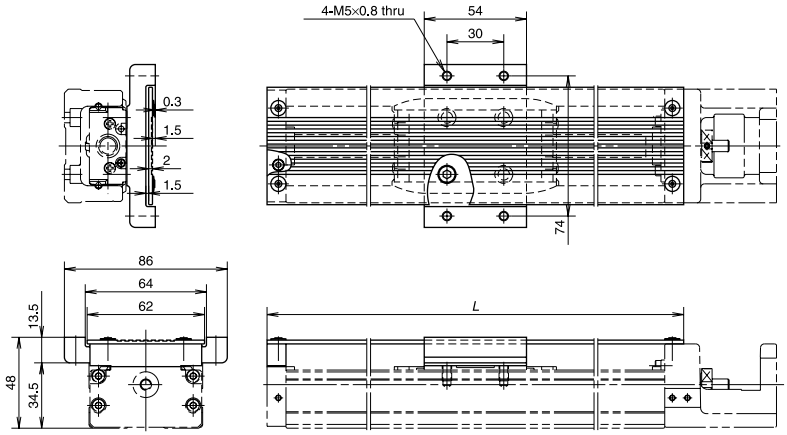

(Unit: mm)

Single Slider		Double Slider		Top cover length L
Stroke	Reference Number	Stroke	Reference Number	
50	MC-HV06005-00	—	—	170
100	MC-HV06010-00	—	—	220
200	MC-HV06020-00	100	MC-HV06010D00	320
300	MC-HV06030-00	200	MC-HV06020D00	420
400	MC-HV06040-00	300	MC-HV06030D00	520
500	MC-HV06050-00	400	MC-HV06040D00	620

Cover Unit for Double Sliders

Two spacers are provided for the double slider.

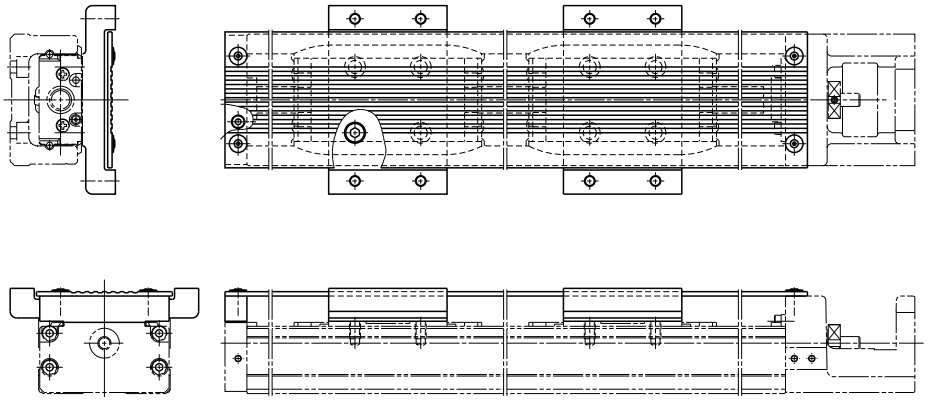

Cover Unit for MCH09

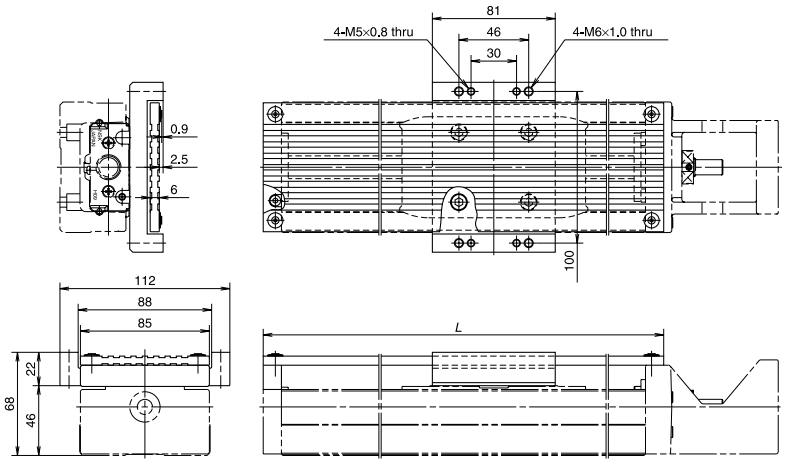

(Unit: mm)

Single Slider		Double Slider		Top cover length L
Stroke	Reference Number	Stroke	Reference Number	
100	MC-HV09010-00	—	—	264
200	MC-HV09020-00	—	—	364
300	MC-HV09030-00	150	MC-HV09015D00	464
400	MC-HV09040-00	250	MC-HV09025D00	564
500	MC-HV09050-00	350	MC-HV09035D00	664
600	MC-HV09060-00	450	MC-HV09045D00	764
700	MC-HV09070-00	—	—	864
800	MC-HV09080-00	650	MC-HV09065D00	964

Cover Unit for Double Sliders

Two spacers are provided for the double slider.

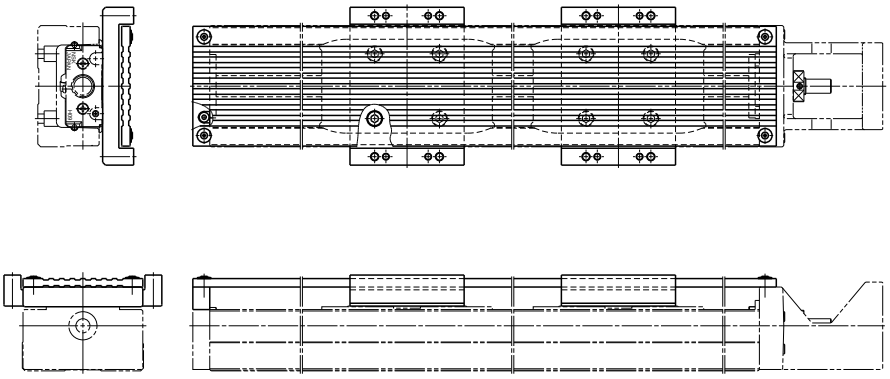

Cover Unit for MCH10

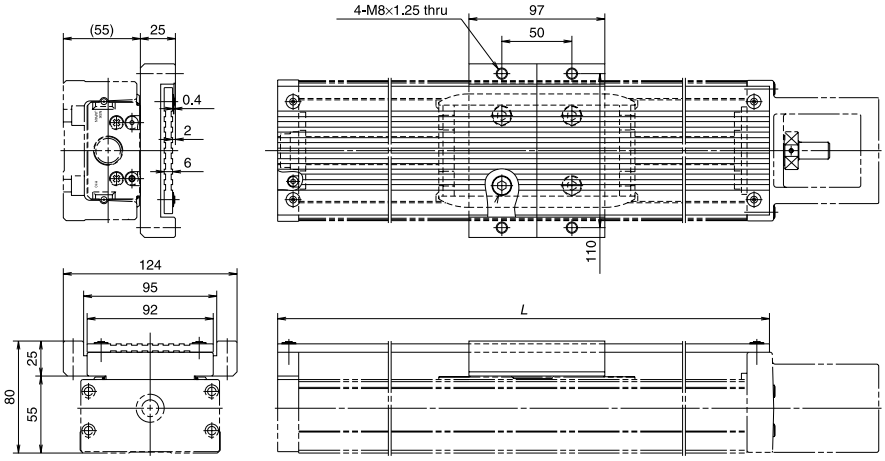

(Unit: mm)

Single Slider		Double Slider		Top cover length L
Stroke	Reference Number	Stroke	Reference Number	
100	MC-HV10010-00	—	—	310
200	MC-HV10020-00	—	—	410
300	MC-HV10030-00	—	—	510
400	MC-HV10040-00	250	MC-HV10025D00	610
500	MC-HV10050-00	350	MC-HV10035D00	710
600	MC-HV10060-00	450	MC-HV10045D00	810
700	MC-HV10070-00	550	MC-HV10055D00	910
800	MC-HV10080-00	650	MC-HV10065D00	1,010
900	MC-HV10090-00	750	MC-HV10075D00	1,110
1,000	MC-HV10100-00	850	MC-HV10085D00	1,210
1,100	MC-HV10110-00	950	MC-HV10095D00	1,310
1,200	MC-HV10120-00	1,050	MC-HV10105D00	1,410

Cover Unit for Double Sliders

Two spacers are provided for the double slider.

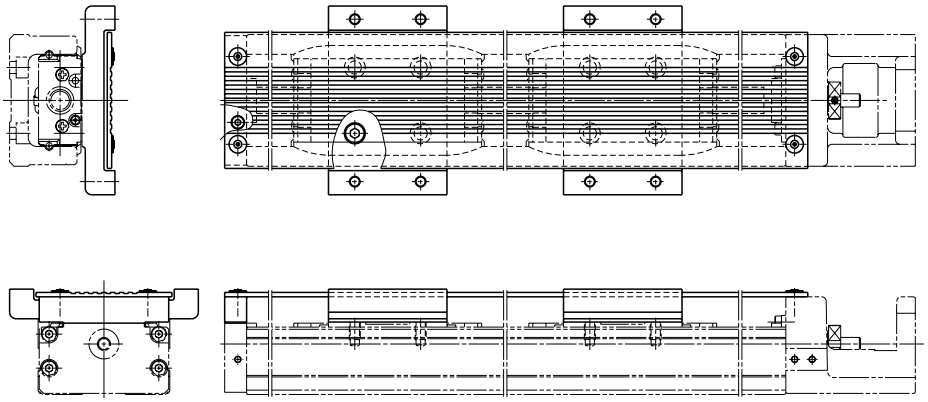

3.3.3 Motor Bracket by NEMA Size

MCH06 (NEMA 23)

Reference Number
MC-BKH06-247-31

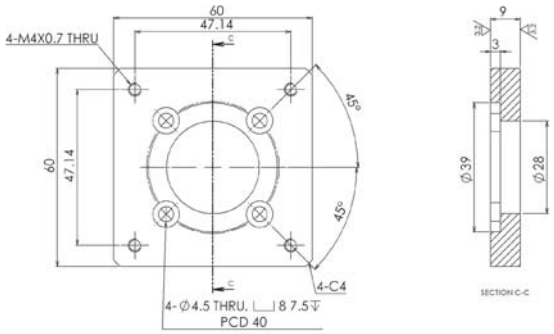

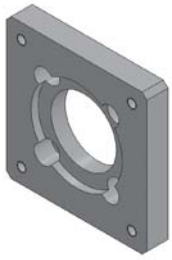

Included:

4 pcs	M4x0.7x8	Socket Head Cap Screws

MCH09 (NEMA 23)

Reference Number
MC-BKH09-247-31

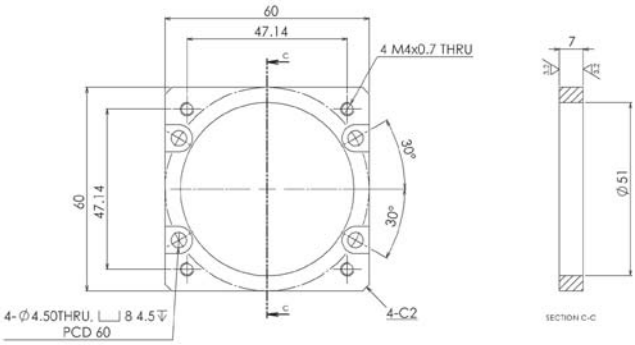

Included:

4 pcs	M4x0.7x10	Socket Head Cap Screws

MCH09 (NEMA 34)

Reference Number
MC-BKH09-269-31

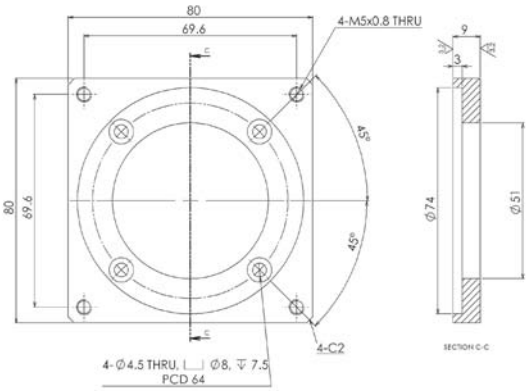

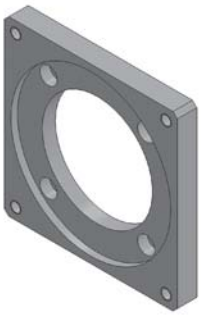

Included:
4 pcs M4x0.7x10 Socket Head Cap Screws

MCH10 (NEMA 34)

Reference Number
MC-BKH10-269-31

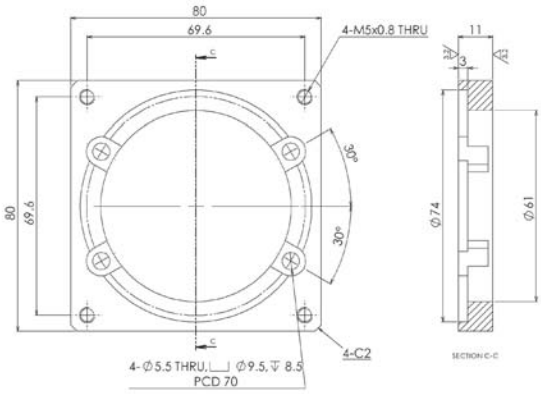

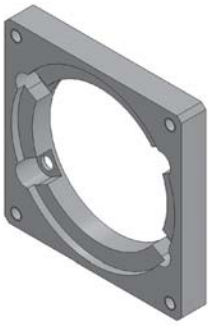

Included:
4 pcs M5x0.8x10 Socket Head Cap Screws

3.3.4 Intermediate Plate for Motor

- If you have a motor not listed below, please contact NSK.
- If you have an indirect motor mount, please contact NSK.
- Be sure to align the center lines when installing the motor.
- Motor models are subject to change by the motor maufacturers. For details, please contact the manufacturer.

Motor Bracket for MCH06 and MCL06

Reference Number: MC-BKH06-145-00

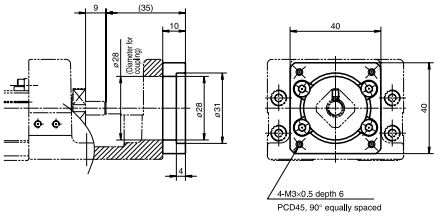

Compatible motor	
Maker	Motor models
Panasonic Co., Ltd.	MSMD5A(50W), MSMD01(100W)

Reference Number: MC-BKH06-146-00

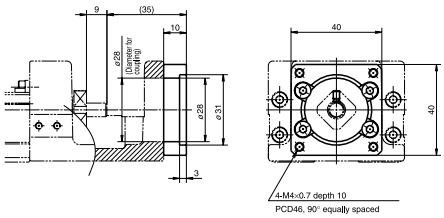

Compatible motor	
Maker	Motor models
Yaskawa Electric Corp.	SGMAH-A3(30W), SGMJV-A5A(50W), SGMAV-A5A(50W), SGMJV-01A(100W), SGMAV-01A(100W)
Mitsubishi Electric Corp.	HF-KP053(50W), HF-MP053(50W), HC-KFS053(50W), HC-MFS053(50W), HF-KP13(100W), HF-MP13(100W), HC-KFS13(100W), HC-MFS13(100W)
OMRON Corp.	R88M-W03(30W), R88M-W05(50W), R88M-W10(100W)
Sanyo Denki Co., Ltd.	P30B04xxx P Series

Reference Number: MC-BKH06-231-00

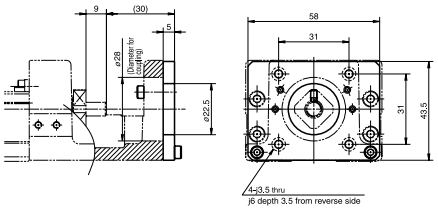

Compatible motor	
Maker	Motor models
Oriental Motor Co. Ltd.	AS46, ASC46, UPK54x, PK54x, CSK54x, CFK54x, UMK24x, CSK24x, PK24x
Sanyo Denki Co., Ltd.	PBM423xxx, 103F55xx

Reference Number: MC-BKH06-250-00

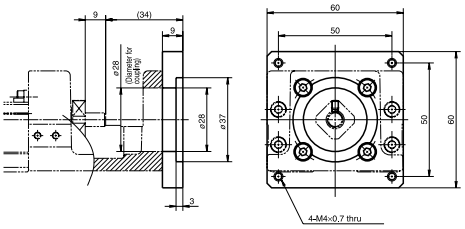

Compatible motor	
Maker	Motor models
Oriental Motor Co. Ltd.	AS66, ASC66, UPK56x, UFK56x, PK56x, CSK56x, CFK56x, MUMS02(200W), MUMS04(400W)
OMRON Corp.	MUMS02(200W), MUMS04(400W)
Sanyo Denki Co., Ltd.	PBM603xx, PBM604xx, 103F78xx

Diameter of ball screw shaft end to install a pulley for indirect motor mount of MCH06

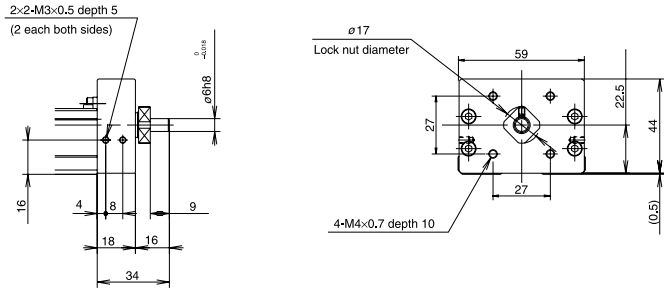

Motor Bracket for MCH09

Reference Number: MC-BKH09-145-00
MC-BKH09-146-00

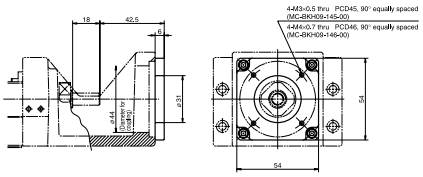

Reference No.	Compatible motor	
	Maker	Motor models
MC-BKH09-145-00	Panasonic Co., Ltd.	MSMD5A(50W), MSMD01(100W)
MC-BKH09-146-00	Yaskawa Electric Corp.	SGMJV-A5A(50W), SGMAV-A5A(50W), SGMJV-01A(100W), SGMAV-01A(100W)
	Mitsubishi Electric Corp.	HF-KP053(50W), HF-MP05(50W), HC-KFS053(50W), HC-MFS053(50W), HF-KP13(100W), HF-MP13(100W), HC-KFS13(100W), HC-MFS13(100W)
	OMRON Corp.	R88M-W05(50W), R88M-W10(100W)
	Sanyo Denki Co., Ltd.	P30B04xxx P Series

Reference Number: MC-BKH09-170-00
MC-BKH09-170-01

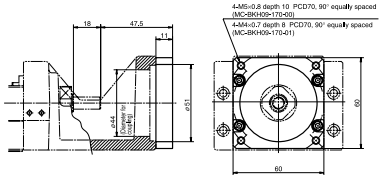

Reference No.	Compatible motor	
	Maker	Motor models
MC-BKH09-170-00	Yaskawa Electric Corp	SGMJV-02A(200W), SGMAV-02A(200W), SGMJV-04A(400W), SGMAV-04A(400W)
	Mitsubishi Electric Corp.	HF-KP23(200W), HF-MP23(200W), HF-KP43(400W), HF-MP43(400W), HC-KFS23(200W), HC-MFS23(200W), HC-KFS43(400W), HC-MFS43(400W)
	OMRON Corp.	R88M-W20(200W), R88M-W40(400W)
	Sanyo Denki Co., Ltd.	P30B06xxx P Series
MC-BKH09-170-01	Panasonic Co., Ltd.	MSMD02(200W), MSMA02(200W), MSMA04(400W), MSMD04(400W)

Reference Number: MC-BKH09-231-00

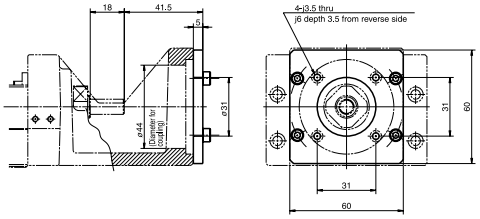

Compatible motor	
Maker	Motor models
Sanyo Denki Co., Ltd.	PBM423xxx, 103F55xx
Oriental Motor Co. Ltd.	AS46, ASC46, UPK54x, PK54x, CSK54x, CFK54x, UMK24x, CSK24x, PK24x

Reference Number: MC-BKH09-250-00

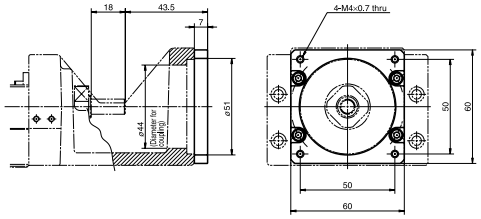

Compatible motor	
Maker	Motor models
Sanyo Denki Co., Ltd.	PBM603xx, PBM604xx, 103F78xx
Oriental Motor Co. Ltd.	AS66, ASC66, UPK56x, UFK56x, PK56x, CSK56x, CFK56x

Diameter of ball screw shaft end to install a pulley for indirect motor mount of MCH09

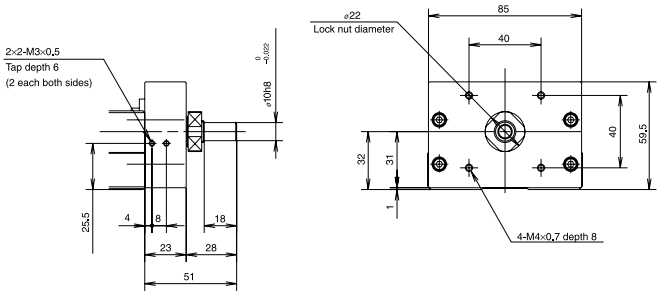

Motor Bracket for MCH10

Reference Number: MC-BKH10-170-00
MC-BKH10-170-01

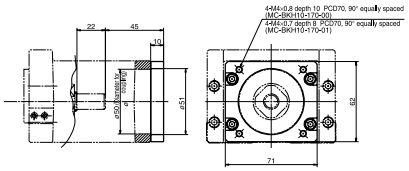

Reference No.	Compatible motor	
	Maker	Motor models
MC-BKH10-170-00	Yaskawa Electric Corp.	SGMJV-02A(200W), SGMAV-02A(200W), SGMJV-04A(400W), SGMAV-04A(400W)
	Mitsubishi Electric Corp.	HF-KP23(200W), HF-MP23(200W), HF-KP43(400W), HF-MP43(400W), HC-KFS23(200W), HC-MFS23(200W), HC-KFS43(400W), HC-MFS43(400W)
	OMRON Corp.	R88M-W20(200W), R88M-W40(400W)
	Sanyo Denki Co., Ltd.	P30B06xxx P Series
MC-BKH10-170-01	Panasonic Co., Ltd.	MSMD02(200W), MSMA02(200W), MSMD04(400W), MSMA04(400W)

Reference Number: MC-BKH10-190-00
MC-BKH10-190-01

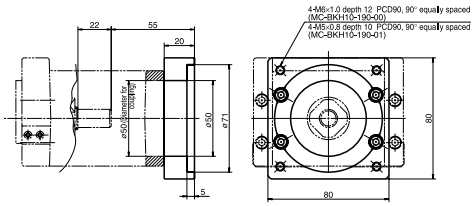

Reference No.	Compatible motor	
	Maker	Motor models
MC-BKH10-190-00	Mitsubishi Electric Corp.	HC-KFS73(750W), HC-MFS73(750W), HF-KP73(750W), HF-MP73(750W)
MC-BKH10-190-01	Sanyo Denki Co., Ltd.	P50B07xxx P Series

Reference Number: MC-BKH10-250-00

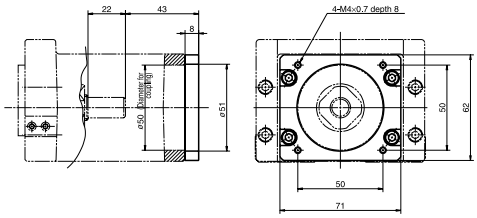

Compatible motor	
Maker	Motor models
Sanyo Denki Co., Ltd.	PBM603xx, PBM604xx, 103F78xx
Oriental Motor Co. Ltd.	AS66, ASC66, UPK56x, PK56x, CSK56x, CFK56x, UMK56x, UFK56X

Reference Number: MC-BKH10-270-00

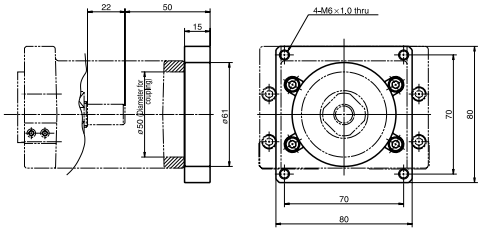

Compatible motor	
Maker	Motor models
Oriental Motor Co. Ltd.	AS98, ASC98, UPK59x, PK59x, CSK59x, CFK59x, UMK59x, UFK59x

Diameter of ball screw shaft end to install a pulley for indirect motor mount of MCH10

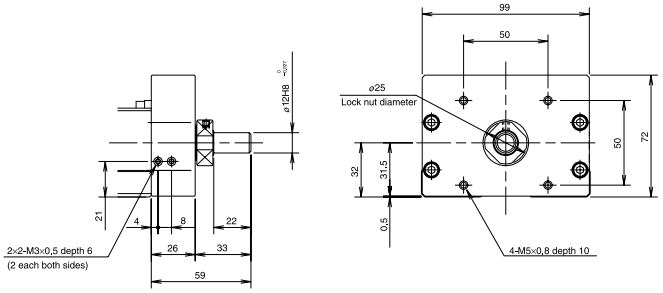

Intermediate Plates for MCH Series

Model No.	Reference No. code	Motor bracket reference no.	Motor manufacturer	Stepping motor model no.	Wattage of AC servo motor					
					30	50	100	200	400	750
MCH06 MCL06	1	MC-BKH06-145-00	Panasonic Co., Ltd.			MSMD5A	MSMD01			
	2	MC-BKH06-146-00	Yaskawa Electric Corp.		SGMAH-A3	SGMJV-A5A SGMAV-A5A	SGMJV-01A SGMAV-01A			
			Mitsubishi Electric Corp.			HF-KP053 HF-MP053 HC-KFS053 HC-MFS053	HF-KP13 HF-MP13 HC-KFS13 HC-MFS13			
			OMRON Corp.		R88M-W03	R88M-W05	R88M-W10			
			Sanyo Denki Co., Ltd.	P30B04xxx (P Series)						
	3	MC-BKH06-231-00	Sanyo Denki Co., Ltd.	PBM423xxx 103F55xx						
			Oriental Motor Co., Ltd.	AS46 , ASC46 UPK54x , PK54x CSK54x , CFK54x UMK24x , CSK24x PK24x						
	4	MC-BKH06-250-00	Sanyo Denki Co., Ltd.	PBM603xx PBM604xx 103F78xx						
			Oriental Motor Co., Ltd.	AS66 , ASC66 UPK56x , UFK56x PK56x , CSK56x CFK56x						
			OMRON Corp.					MUMS02	MUMS04	
MCH09	1	MC-BKH09-145-00	Panasonic Co., Ltd.			MSMD5A	MSMD01			
	2	MC-BKH09-146-00	Yaskawa Electric Corp.			SGMJV-A5A SGMAV-A5A	SGMJV-01A SGMAV-01A			
			Mitsubishi Electric Corp.			HF-KP053 HF-MP05 HC-KFS053 HC-MFS053	HF-KP13 HF-MP13 HC-KFS13 HC-MFS13			
			OMRON Corp.			R88M-W05	R88M-W10			
			Sanyo Denki Co., Ltd.	P30B04xxx (P Series)						
	3	MC-BKH09-170-00	Yaskawa Electric Corp.					SGMJV-02A SGMAV-02A	SGMJV-04A SGMAV-04A	
			Mitsubishi Electric Corp.					HF-KP23 HF-MP23 HC-KFS23 HC-MFS23	HF-KP43 HF-MP43 HC-KFS43 HC-MFS43	
			OMRON Corp.					R88M-W20	R88M-W40	
			Sanyo Denki Co., Ltd.	P30B06xxx (P Series)						
	4	MC-BKH09-170-01	Panasonic Co., Ltd.					MSMD02 MSMA02	MSMD04 MSMA04	
	5	MC-BKH09-231-00	Sanyo Denki Co., Ltd.	PBM423xxx 103F55xx						
			Oriental Motor Co., Ltd.	AS46 , ASC46 UPK54x , PK54x CSK54x , CFK54x UMK24x , CSK24x PK24x						
	6	MC-BKH09-250-00	Sanyo Denki Co., Ltd.	PBM603xx PBM604xx 103F78xx						
			Oriental Motor Co., Ltd.	AS66 , ASC66 UPK56x , UFK56x PK56x , CSK56x CFK56x						
MCH10	1	MC-BKH10-170-00	Yaskawa Electric Corp.					SGMJV-02A SGMAV-02A	SGMJV-04A SGMAV-04A	
			Mitsubishi Electric Corp.					HF-KP23 HF-MP23 HC-KFS23 HC-MFS23	HF-KP43 HF-MP43 HC-KFS43 HC-MFS43	
			OMRON Corp.					R88M-W20	R88M-W40	
			Sanyo Denki Co., Ltd.	P30B06xxx (P Series)						
	2	MC-BKH10-170-01	Panasonic Co., Ltd.					MSMD02 MSMA02	MSMD04 MSMA04	
	3	MC-BKH10-190-00	Mitsubishi Electric Corp.							HC-KFS73 HC-MFS73 HF-KP73 HF-MP73
	4	MC-BKH10-190-01	Sanyo Denki Co., Ltd.	P50B07xxx (P Series)						
	5	MC-BKH10-250-00	Sanyo Denki Co., Ltd.	PBM603xx PBM604xx 103F78xx						
			Oriental Motor Co., Ltd.	AS66 , ASC66 UPK56x , PK56x CSK56x , CFK56x UMK56x , UFK56x						
	6	MC-BKH10-270-00	Oriental Motor Co., Ltd.	AS98 , ASC98 UPK59x , PK59x CSK59x , CFK59x UMK59x , UFK59x						

Notes

ToughCarrier™

4.1 Features 98
4.2 Classification and Series 98
4.3 Accessories 100
4.4 Selection of Toughcarrier
4.4.1 Selection Procedure for Toughcarrier 101
4.4.2 Stroke and Lead 102
4.4.3 Reference Number Coding and Accuracy Grade 103
4.4.4 Maximum Speed 104
4.4.5 Rigidity 106
4.4.6 Basic Load Rating 107
4.4.7 Estimation of Life Expectancy 108
4.4.8 Example of Life Estimation 110
4.5 TCH Series Dimension Table of Standard Products
4.5.1 TCH06 Series 114
4.5.2 TCH09 Series 116
4.5.3 TCH10 Series 118
4.6 Accessory Specifications
4.6.1 Sensor Unit 120
4.6.2 Cover Unit 121
4.6.3 Motor Bracket 124
4.7 Motor Bracket Compatibility Table 133
4.8 Sensor Rail and Top Cover Unit Combination Table 134
4.9 Toughcarrier High-Thrust Series 137

4.1 Features

Greatly improved load capacity due to switching of rolling elements to rollers. Mounting dimensions are compatible with those of the MCH Series, allowing substitution.

1 Light weight and compact design

Taking into account part composition and rigidity, the cross sections of the rail and slider are the same as MCH series.

2 Superb rust-preventive ability

Low-temperature chrome plating comes standard.

3 All-in-one structure

- The all-in-one structure integrates a ball screw, a linear guide and a support unit into a single structure to significantly reduce design time.
- The bottom and one side of the rail are datum surfaces to facilitate highly accurate installation. Models with pin holes are also available as standard.
- Immediate operation after installation and run-in is possible due to pre-packed grease.
- A wide selection of ball screw leads are available.

4 Long-term maintenance-free operation

Use of NSK K1 lubrication unit and grease maintains smooth lubricating performance for long periods.

5 Updated rolling elements

Rollers are installed as rolling elements for the first time anywhere.

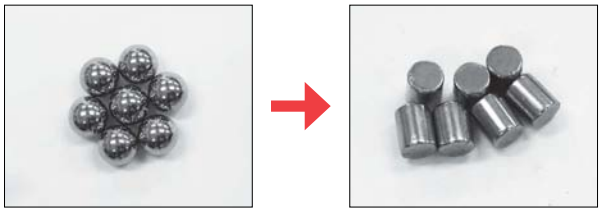

4.2 Classification and Series

Structure

Rolling elements: Balls
MCH Series

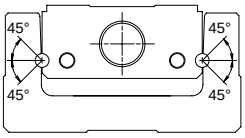

Rolling elements: Rollers
TCH Series

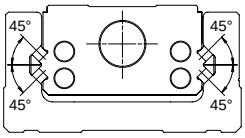

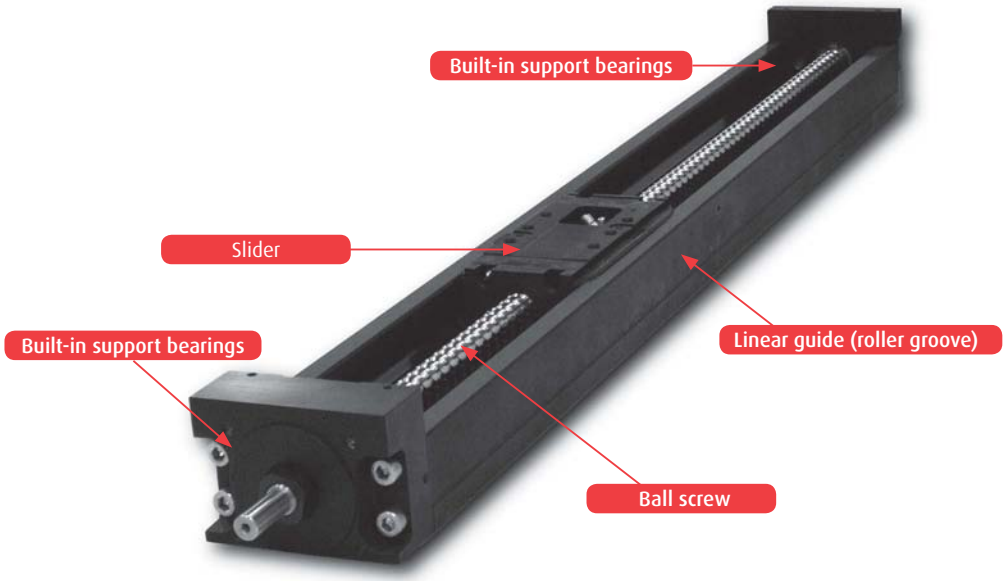

High rigidity, long life (N)

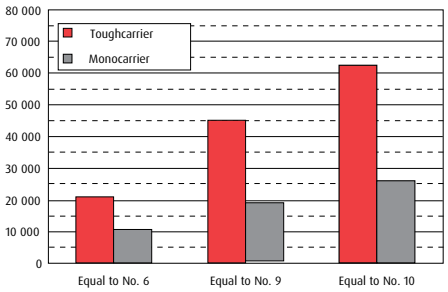

Twice the dynamic load rating and nine-times longer life compared to Monocarrier

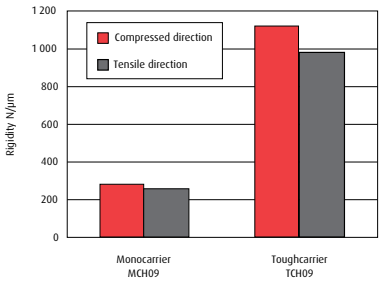

Four-times higher rigidity than Monocarrier

Cross-sections of TCH Series

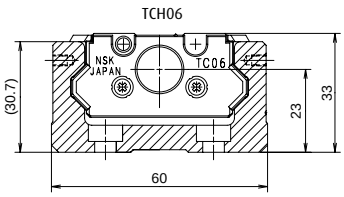

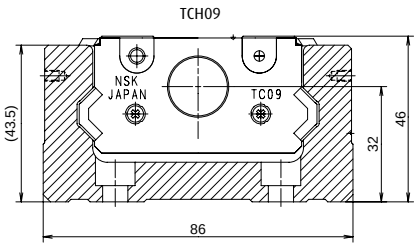

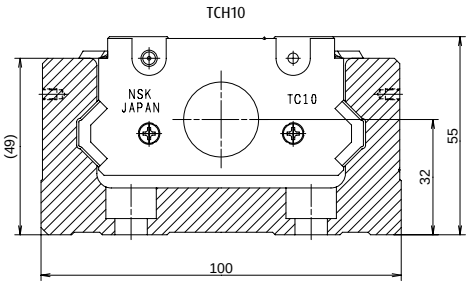

4.3 Accessories

Accessories for Toughcarrier

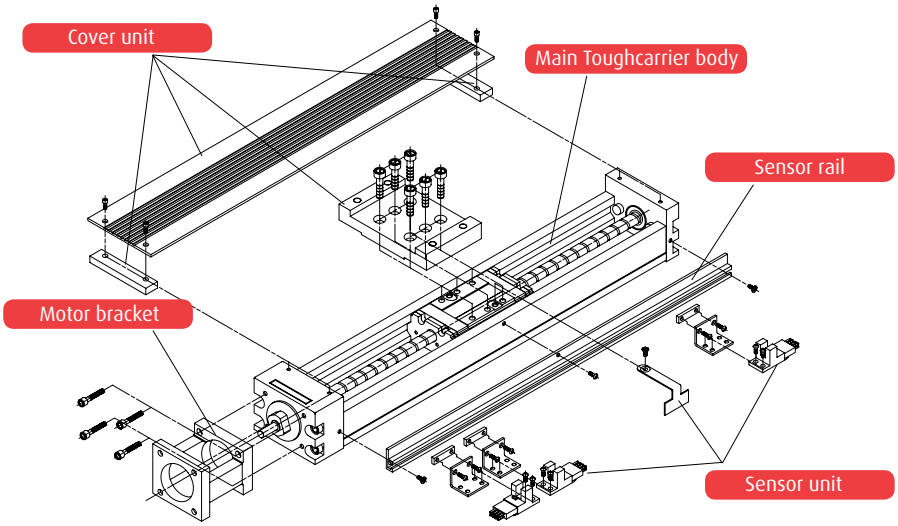

Assembly Example of Accessories

Sensor unit, cover unit, motor bracket and sensor rail are available as options for Toughcarrier. Contact NSK for other specifications other than those of NSK standard accessories.

1. Sensor unit:
   - Photo sensor: Use of both OMRON EE-SX674 and EE-1001
   - Proximity switch: Use of OMRON E2S-W13, E2S-W14

   Available in a unit including sensor fitting clamps.
2. Sensor rail: This rail holds the sensor. Please order the appropriate rail according to the stroke.
3. Cover unit: This unit consists of a top cover and spacer plate.
4. Motor bracket: Brackets are available for a variety of models from different motor manufacturers. Please consult NSK when the mounting dimensions differ from your order.

4.4 Selection of Toughcarrier
4.4.1 Selection Procedure for Toughcarrier

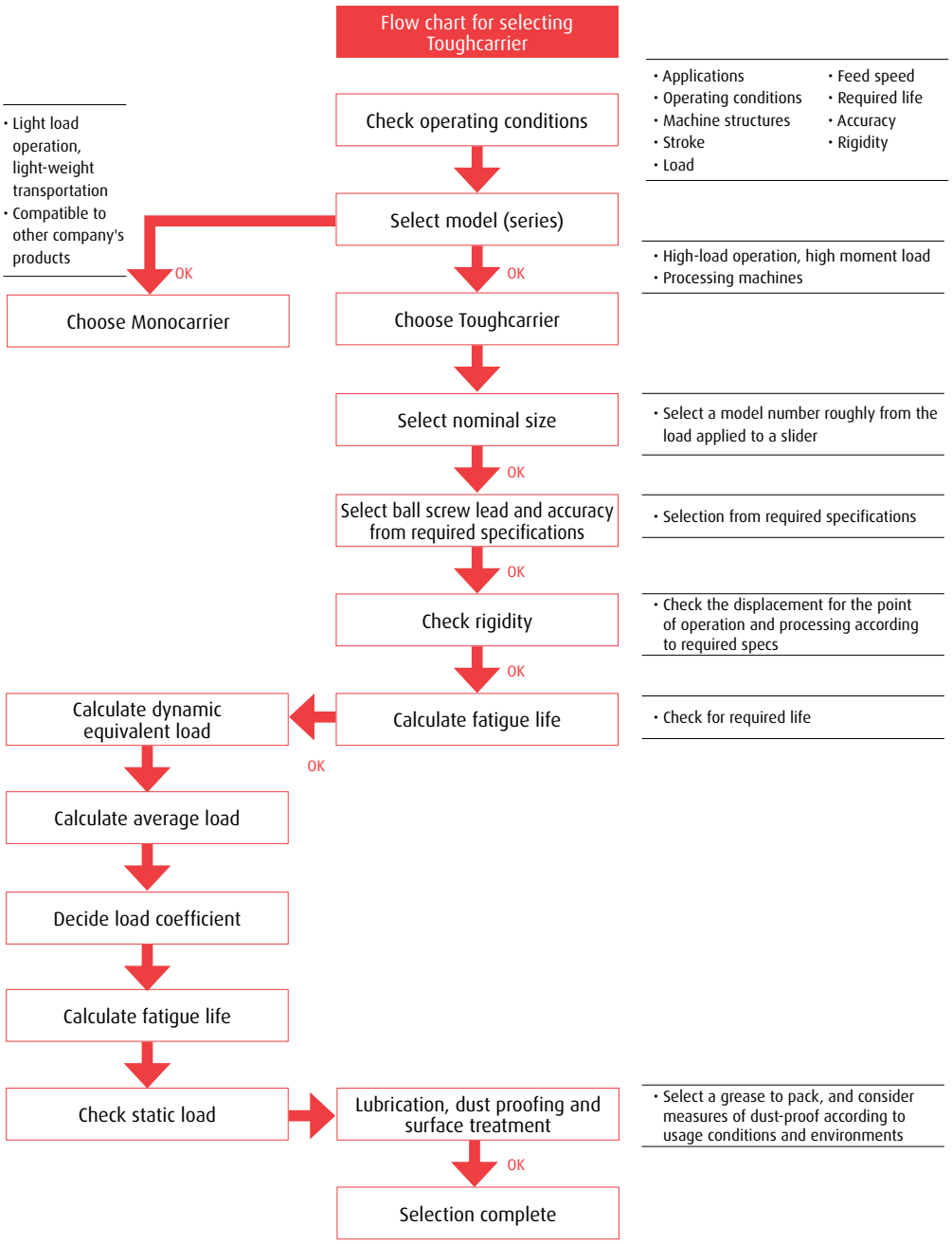

4.4.2 Stroke and Lead

Combinations of rail length and lead

TCH06

Slider type	Standard slider						Short slider					
	Single slider			Double slider			Single slider			Double slider		
Lead (mm) / Rail length (mm)	5	10	20	5	10	20	5	10	20	5	10	20
150	●	●	●				●	●				
200	●	●	●				●	●				
300	●	●	●	●	●		●	●		●	●	
400	●	●	●	●	●		●	●		●	●	
500	●	●	●	●	●		●	●		●	●	
600	●	●	●		●	●	●	●			●	

*20 mm lead for short sliders not available.

TCH09

Slider type	Standard slider						Short slider					
	Single slider			Double slider			Single slider			Double slider		
Lead (mm) / Rail length (mm)	5	10	20	5	10	20	5	10	20	5	10	20
240	●	●	●				●	●	●			
340	●	●	●				●	●	●			
440	●	●	●	●	●		●	●	●	●	●	
540	●	●	●	●	●		●	●	●	●	●	
640	●	●	●	●	●		●	●	●	●	●	
740	●	●	●		●	●	●	●	●		●	●
840	●	●	●				●	●	●			
940	●	●	●		●	●	●	●	●		●	●

TCH10

Slider type	Standard slider				Short slider			
	Single slider		Double slider		Single slider		Double slider	
Lead (mm) / Rail length (mm)	10	20	10	20	10	20	10	20
280	●	●			●	●		
380	●	●			●	●		
480	●	●			●	●		
580	●	●	●	●	●	●	●	●
680	●	●	●	●	●	●	●	●
780	●	●	●	●	●	●	●	●
880	●	●	●	●	●	●	●	●
980	●	●	●	●	●	●	●	●
1 080	●	●		●	●	●		●
1 180	●	●		●	●	●		●
1 280	●	●		●	●	●		●
1 380	●	●		●	●	●		●

Availability

Model No.	Lead (mm)	Slider	Rail length (mm)
TCH06	5, 10, 20	Single Double	600
TCH09	5, 10, 20	Single Double	940
TCH10	10, 20	Single Double	1 380

4.4.3 Reference Number Coding and Accuracy Grade

Reference number coding for TCH Series

Body

TC	H	06	030	H	10	K	0	0
TOUGHCARRIER	**TYPE**	**NOMINAL SIZE**	**STROKE**	**ACCURACY GRADE**	**BALL SCREW LEAD**	**SLIDER SPECIFICATION**	**GREASE SPECIFICATION**	**NSK CONTROL NUMBER**
TC: Toughcarrier	**H:** Standard **S:** With Accessories	**Rail width, unit:** 10 mm	**Unit:** 10 mm	**H:** High Grade **P:** Precision Grade	**Unit:** mm	**K:** Single slider **D:** Double slider **A:** Single short slider **B:** Double short slider	**0:** YS2 (standard)	**0:** Without Pin Holes **1:** With Pin Holes

Special Specifications

TC	H	06	030	H	10	K	3	XXB
							SPECIAL SPECIFICATION	**DESIGN SERIAL NUMBER**
							3: Toughcarrier for special specs **5:** Toughcarrier high-thrust series*	

Reference Number for Accessories

Sensor Unit

TC	SRH	XX	00
TOUGHCARRIER	**SENSOR UNIT**	**NOMINAL SIZE**	**CONTROL NUMBER**
TC: Toughcarrier		**06** **09** **10**	

Cover Unit

TC	HV	XX	XXX	K	00
TOUGHCARRIER	**COVER UNIT**	**NOMINAL SIZE**	**STROKE (NOMINAL)**	**SLIDER SPECS**	**CONTROL NUMBER**
TC: Toughcarrier		**06** **09** **10**		Refer to the body reference no.	

Sensor Rail

TC	SRL	X	XXXX
TOUGHCARRIER	**SENSOR RAIL**	**NOMINAL SIZE**	**BODY RAIL LENGTH**
TC: Toughcarrier		**6:** 06 **9:** 09 **1:** 10	

Motor Bracket

TC	BKH	XX	XXX	00
TOUGHCARRIER	**MOTOR BRACKET**	**NOMINAL SIZE**	**DIMENSION FOR MOTOR MOUNTING**	**CONTROL NUMBER**
TC: Toughcarrier		**06** **09** **10**		

Accuracy grade

Unit: μm

Grade	High grade (H grade)			Precision grade (P grade)			
Stroke (mm)	Repeatability	Running parallelism (vertical)	Backlash	Repeatability	Positioning accuracy	Running parallelism (vertical)	Backlash
~ 200	±10	14	20 or less	±3	20	8	3 or less
~ 400		16			25	10	
~ 600		20			30	12	
~ 700		23				15	
~ 1 000					35		
~ 1 200		30			40	20	

High and precision grades are available for accuracy grade. Consult NSK for your requirements.

4.4.4 Maximum Speed

Maximum speed (standard slider)

Maximum speed of the Toughcarrier is determined by the critical speed of the ball screw shaft and the d · n value. Do not exceed the maximum speed in the table below.

	Stroke (nominal)	Ball screw lead (mm)	Body rail length L_2 (mm)	Maximum speed (mm/s)
TCH06 Single slider	50	5	150	250
	100		200	
	200		300	
	300		400	
	400		500	
	500		600	
	50	10	150	500
	100		200	
	200		300	
	300		400	
	400		500	
	500		600	
	50	20	150	1 000
	100		200	
	200		300	
	300		400	
	400		500	
	500		600	
TCH06 Double slider	130	5	300	250
	230		400	
	330		500	
	130	10	300	500
	230		400	
	330		500	
	430		600	
	430	20	600	1 000
TCH09 Single slider	100	5	240	250
	200		340	
	300		440	
	400		540	
	500		640	
	600		740	
	700		840	
	800		940	210
	100	10	240	500
	200		340	
	300		440	
	400		540	
	500		640	
	600		740	
	700		840	
	800		940	410
	100	20	240	1 000
	200		340	
	300		440	
	400		540	
	500		640	
	600		740	
	700		840	
	800		940	820

	Stroke (nominal)	Ball screw lead (mm)	Body rail length L_2 (mm)	Maximum speed (mm/s)
TCH09 Double slider	170	5	440	250
	270		540	
	370		640	
	170	10	440	500
	270		540	
	370		640	
	470		740	
	670		940	
	470	20	740	1 000
	670		940	
TCH10 Single slider	100	10	280	500
	200		380	
	300		480	
	400		580	
	500		680	
	600		780	
	700		880	
	800		980	
	900		1 080	440
	1 000		1 180	360
	1 100		1 280	300
	1 200		1 380	250
	100	20	280	1 000
	200		380	
	300		480	
	400		580	
	500		680	
	600		780	
	700		880	
	800		980	
	900		1 080	870
	1 000		1 180	720
	1 100		1 280	600
	1 200		1 380	510
TCH10 Double slider	270	10	580	500
	370		680	
	470		780	
	570		880	
	670		980	
	270	20	580	1 000
	370		680	
	470		780	
	570		880	
	670		980	
	770		1 080	
	870		1 180	930
	970		1 280	780
	1 070		1 380	650

Note: If you need to operate the Toughcarrier near the critical speed or in excess of the maximum speed in the table, please consult NSK.

Maximum speed (short slider)

Maximum speed of the Toughcarrier is determined by the critical speed of the ball screw shaft and the d · n value. Do not exceed the maximum speed in the table below.

	Stroke (nominal)	Ball screw lead (mm)	Body rail length L_2 (mm)	Maximum speed (mm/s)
TCH06 Single slider	70	5	150	250
	120		200	
	220		300	
	320		400	
	420		500	
	520		600	
	70	10	150	500
	120		200	
	220		300	
	320		400	
	420		500	
	520		600	
TCH06 Double slider	170	5	300	250
	270		400	
	370		500	
	170	10	300	500
	270		400	
	370		500	
	470		600	
TCH09 Single slider	140	5	240	250
	240		340	
	340		440	
	440		540	
	540		640	
	640		740	
	740		840	240
	840		940	190
	140	10	240	500
	240		340	
	340		440	
	440		540	
	540		640	
	640		740	
	740		840	480
	840		940	380
	140	20	240	1 000
	240		340	
	340		440	
	440		540	
	540		640	
	640		740	
	740		840	960
	840		940	760

	Stroke (nominal)	Ball screw lead (mm)	Body rail length L_2 (mm)	Maximum speed (mm/s)
TCH09 Double slider	250	5	440	250
	350		540	
	450		640	
	250	10	440	500
	350		540	
	450		640	
	550		740	
	750		940	460
	550	20	740	1 000
	750		940	930
TCH10 Single slider	160	10	280	500
	260		380	
	360		480	
	460		580	
	560		680	
	660		780	
	760		880	
	860		980	490
	960		1 080	400
	1 060		1 180	330
	1 160		1 280	280
	1 260		1 380	240
	160	20	280	1 000
	260		380	
	360		480	
	460		580	
	560		680	
	660		780	
	760		880	
	860		980	980
	960		1 080	800
	1 060		1 180	660
	1 160		1 280	560
	1 260		1 380	480
TCH10 Double slider	360	10	580	500
	460		680	
	560		780	
	660		880	
	760		980	
	360	20	580	1 000
	460		680	
	560		780	
	660		880	
	760		980	
	860		1 080	980
	960		1 180	800
	1 060		1 280	660
	1 160		1 380	560

Note: If you need to operate the Toughcarrier near the critical speed or in excess of the maximum speed in the table, please consult NSK.

4.4.5 Rigidity

Rigidity of rail

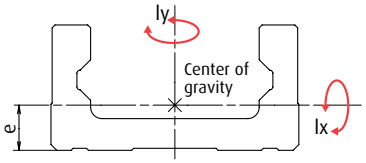

Model no.	Geometrical moment of inertia × 10^4 (mm^4)		Center of gravity (mm)	Mass (kg/100mm)
	Ix	Iy	e	w
TCH06	6.47	36.2	10.6	0.60
TCH09	28.40	162.0	15.7	1.32
TCH10	46.00	283.0	17.2	1.73

Rigidity in radial direction

TCH06 standard slider

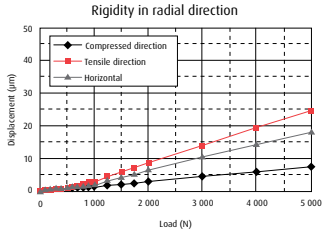

TCH09 standard slider

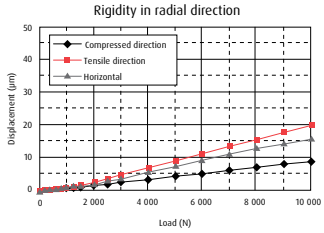

TCH10 standard slider

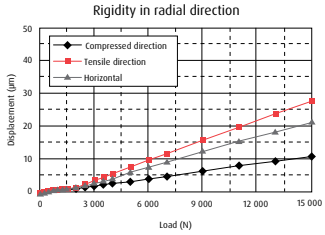

TCH06 short slider

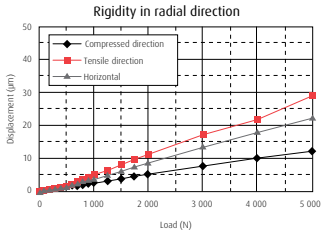

TCH09 short slider

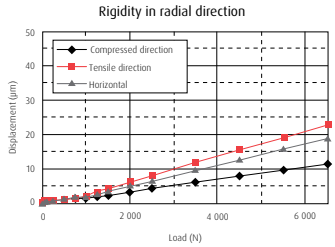

TCH10 short slider

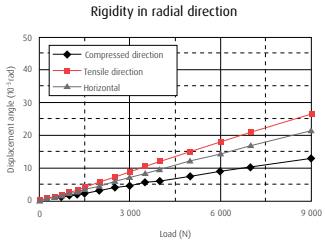

Moment in radial direction

TCH06 standard slider

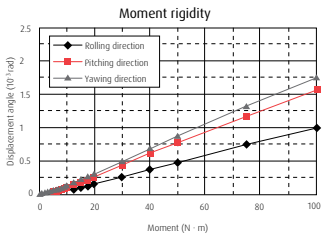

TCH09 standard slider

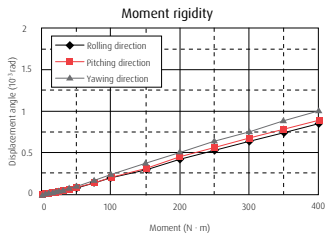

TCH10 standard slider

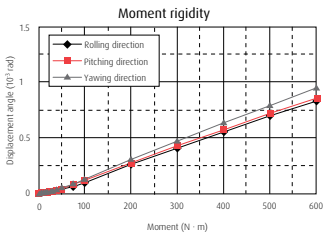

TCH06 short slider

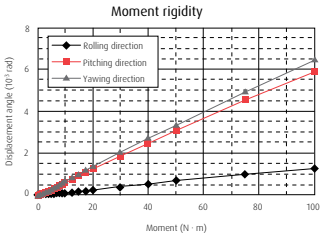

TCH09 short slider

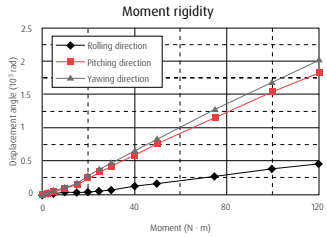

TCH10 short slider

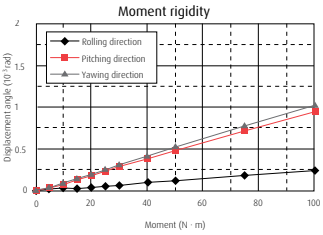

4.4.6 Basic Load Rating

Basic Load Rating for TCH series

Standard slider

Model no.	Lead ℓ (mm)	Shaft dia. d (mm)	Basic dynamic load rating (N)			Basic static load rating (N)		Support bearing limit load (N)
			Ball screw C_a	Linear guide C	Support bearings C_a	Ball screw C_{0a}	Linear guide C_0	
TCH06	5	Ø12	3 760	20 900	6 600	6 310	45 000	2 700
	10		2 260			3 780		
	20		2 260			3 780		
TCH09	5	Ø15	7 100	44 900	8 800	13 000	96 900	5 090
	10		7 060			12 700		
	20		4 560			7 750		
TCH10	10	Ø20	10 900	62 400	9 600	21 700	132 000	5 670
	20		7 060			12 700		

Short slider

Model no.	Lead ℓ (mm)	Shaft dia. d (mm)	Basic dynamic load rating (N)			Basic static load rating (N)		Support bearing limit load (N)
			Ball screw C_a	Linear guide C	Support bearings C_a	Ball screw C_{0a}	Linear guide C_0	
TCH06	5	Ø12	3 760	12 200	6 600	6 310	22 500	2 700
	10		2 260			3 780		
TCH09	5	Ø15	7 100	27 900	8 800	13 000	52 500	5 090
	10		7 060			12 700		
	20		4 560			7 750		
TCH10	10	Ø20	10 900	38 700	9 600	21 700	71 500	5 670
	20		7 060			12 700		

- Basic dynamic and static load ratings indicate values for one slider.
- Basic dynamic load rating of linear guide is a load that allows for a 50-km rating fatigue life and is a vertical and constant load on the ball mounting surface.
- Basic dynamic load rating of ball screw is load in the axial direction that allows 90% of ball screws of a group of the same Toughcarriers to rotate 1 million revolutions under the same condition without causing flaking by rolling contact fatigue.
- Basic dynamic load rating of support bearings is load that allows 1 million revolutions under the same condition.
- Basic static load rating is load that results in combined permanent deformations at contact points of rolling elements and rolling surfaces of respective parts at a diameter of 0.01%.

Basic static moment load of linear guide

Standard slider

Model no.	Slider	Basic static moment load (N·m)		
		Rolling M_{R0}	Pitching M_{P0}	Yawing M_{Y0}
TCH06	Single	800	340	340
TCH09	Single	2 510	1 340	1 340
TCH10	Single	3 980	2 150	2 150

Short slider

Model no.	Slider			
		Rolling M_{R0}	Pitching M_{P0}	Yawing M_{Y0}
TCH06	Single	400	85	85
TCH09	Single	1 350	390	390
TCH10	Single	2 150	630	630

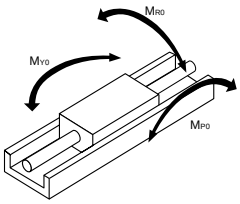

M_{R0} : Rolling moment
M_{P0} : Pitching moment
M_{Y0} : Yawing moment

4.4.7 Estimation of Life Expectancy

(1) Life of linear guide for Toughcarrier

Study the load to be applied to the linear guide of Toughcarrier. The equivalent load (Fe) is determined by substituting the load for equation ① ② ②' for tightly coupled double slider type.

- For single slider

$$Fe = Y_H \cdot F_H + Y_V \cdot F_V + Y_R \cdot \varepsilon_R \cdot M_R + Y_P \cdot \varepsilon_P \cdot M_P + Y_Y \cdot \varepsilon_Y \cdot M_Y \quad \cdots\cdots ①$$

- For double slider

For double sliders, calculation of the load applied to each slider is required.

Dynamic equivalent load is only for rolling moment.

This is the same procedure as for linear guide selection where two sliders are installed in a rail. Check the mean load for each slider, and calculate shortest life becomes the life of linear guide.

When lateral direction (F_H) and vertical direction (F_V) loads are applied to the center of the coordinate,

$$F_{HA} = \frac{F_H}{2} + \frac{M_Y}{\ell}, \quad F_{VA} = \frac{F_V}{2} + \frac{M_P}{\ell}$$

$$F_{HB} = \frac{F_H}{2} - \frac{M_Y}{\ell}, \quad F_{VB} = \frac{F_V}{2} - \frac{M_P}{\ell}$$

[Slider A]

$$Fe_A = Y_H \cdot F_{HA} + Y_V \cdot F_{VA} + Y_R \varepsilon_R \frac{M_R}{2} \quad \cdots\cdots ②$$

$$= Y_H \left(\frac{F_H}{2} + \frac{M_Y}{\ell}\right) + Y_V \left(\frac{F_V}{2} + \frac{M_P}{\ell}\right) + Y_R \varepsilon_R \frac{M_R}{2}$$

[Slider B]

$$Fe_B = Y_H \cdot F_{HB} + Y_V \cdot F_{VB} + Y_R \varepsilon_R \frac{M_R}{2} \quad \cdots\cdots ②'$$

$$= Y_H \left(\frac{F_H}{2} - \frac{M_Y}{\ell}\right) + Y_V \left(\frac{F_V}{2} - \frac{M_P}{\ell}\right) + Y_R \varepsilon_R \frac{M_R}{2}$$

F_H : Lateral direction load acting on the slider (N)
F_V : Vertical direction load acting on the slider (N)
M_R : Rolling moment acting on the slider (N · m)
M_P : Pitching moment acting on the slider (N · m)
M_Y : Yawing moment acting on the slider (N · m)
ε_R : Dynamic equivalent coefficient to rolling moment
ε_P : Dynamic equivalent coefficient to pitching moment
ε_Y : Dynamic equivalent coefficient to yawing moment
ℓ : Sliders span

*For dynamic equivalent coefficient, see table on facing page.
Y_H, Y_V, Y_R, Y_P, Y_Y: 1.0 or 0.5

At equations ① ② and ②' for obtaining equivalent load Fe, the maximum value of Y in the values for each equation is assumed to be 1.0. For others it is assumed to be 0.5.

Direction of load

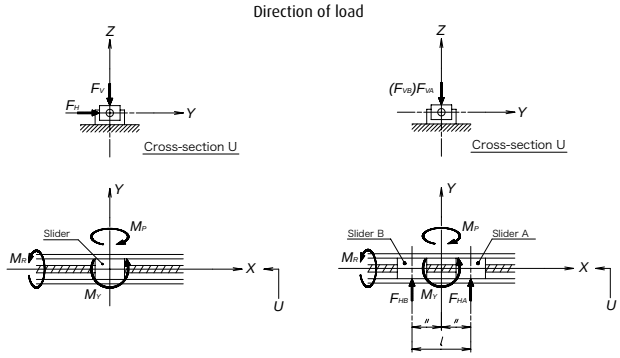

Stepwise Fluctuating Load

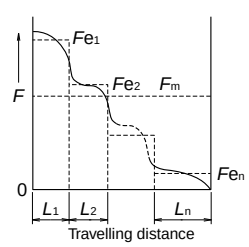

If the loads acting on the slider fluctuate (in general, M_P and M_Y may fluctuate with the acceleration/deceleration of slider), the mean effective load is determined by Eq ③.

Travelling distance under the equivalent load Fe_1 : L_1
Travelling distance under the equivalent load Fe_2 : L_2
. . . . . .
Travelling distance under the equivalent load Fe_n : L_n

Mean effective load Fm is calculated by the following equation.

$$Fm = \sqrt[\frac{10}{3}]{\frac{1}{L}\left(Fe_1^{\frac{10}{3}} \cdot L_1 + Fe_2^{\frac{10}{3}} \cdot L_2 + \cdots + Fe_n^{\frac{10}{3}} \cdot L_n\right)} \cdots ③$$

Fm: Mean effective load of fluctuating loads (N)
L : Total travelling distance (mm)

The life of linear guide for Toughcarrier is determined by Eq. ④.

$$L = 50 \times \left(\frac{C}{f_w \cdot Fm}\right)^{\frac{10}{3}} \cdots\cdots ④$$

L : Life of linear guide (km)
C : Basic dynamic load rating of linear guide (N)
Fm: Mean effective load acting on linear guide (N)
f_w : Load coefficient

When the estimated life does meet clear the required life, the life of the linear guide is calculated again after following measures are taken,
1: Change from single slider type to double slider type.
2: Use a larger Toughcarrier.

(2) Life of Ball Screw (Support Bearing)

The mean effective load is determined from the axial load.
Axial direction mean effective load Fm

$$Fm = \sqrt[3]{\frac{1}{L}\left(Fe_1^3 \cdot L_1 + Fe_2^3 \cdot L_2 + \cdots + Fe_n^3 \cdot L_n\right)} \cdots ⑤$$

The life of ball screw is determined by Eq. ⑥.

$$L = \ell \times \left(\frac{C_a}{f_w \cdot Fm}\right)^3 \times 10^6 \cdots\cdots ⑥$$

ℓ : Ball screw lead (mm)
L : Life of ball screw (mm)
C_a : Basic dynamic load rating of ball screw (N)
Fm : Mean effective load acting on ball screw (N)
f_w : Load factor

The life of a support bearing is calculated by Eq. ⑥. If the life of ball screw/support bearing does not meet the required life, use a larger size Toughcarrier. After applying the calculations mentioned above, selection of the Toughcarrier is completed.

Value of load factor

Operating conditions	Load factor f_w
At smooth operation with no mechanical shock	1.0 ~ 1.2
At normal operation	1.2 ~ 1.5
At operation with mechanical shock and vibration	1.5 ~ 3.0

*When the bottom of rail is not fastened, the load factor is 1.5 or greater.

Dynamic Equivalent Coefficient

	TCH06			TCH09			TCH10		
	Rolling	Pitching	Yawing	Rolling	Pitching	Yawing	Rolling	Pitching	Yawing
Standard slider	56	93	93	39	51	51	33	44	44
Short slider	56	186	186	39	95	95	33	80	80

4.4.8 Example of Life Estimation

Example of life estimation for Toughcarrier

Example-1

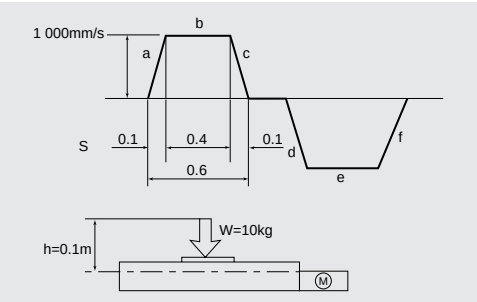

1 Use condition

Stroke	: 500 mm
Maximum speed	: 1 000 mm/s
Load mass	: W = 10 kg
Acceleration	: 9.80 m/s^2
Setting position	: Horizontal
Operating profile	: See above figure

2 Selection of model number (interim selection)

First, select a greater ball screw lead as the maximum speed is 1 000 mm/s. The interim selection is TCH06050H20K00, a single slider specification TCH06 that has 500 mm stroke, as the stroke is 500 mm.

3 Calculation

3-1 Linear guide

3-1-1 Fatigue Life

Multiply the result of ① by the dynamic equivalent coefficient to convert the load volume. From operation profile in the above figure, the acceleration is 10 m/s^2.

i) Constant speed

$Fe_1 = Y_V \cdot F_V = Y_V \cdot W \cdot g$

$= 1 \cdot 10 \cdot 9.8 = 98$ N

ii) Accelerating

$Fe_2 = Y_V \cdot F_V + Y_P \cdot \varepsilon_P \cdot M_P = Y_V \cdot W \cdot g + Y_P \cdot \varepsilon_P \cdot h \cdot W \cdot \alpha$

$= 0.5 \cdot 10 \cdot 9.8 + 1 \cdot 93 \cdot 0.1 \cdot 10 \cdot 10 = 979$ N

iii) Decelerating

$Fe_3 = Y_V \cdot F_V + Y_P \cdot \varepsilon_P \cdot M_P$

$= 0.5 \cdot 10 \cdot 9.8 + 1 \cdot 93 \cdot 0.1 \cdot 10 \cdot 10 = 979$ N

Mean effective load Fm

$$Fm = \sqrt[\frac{10}{3}]{\frac{1}{L}\left(Fe_1^{\frac{10}{3}} \cdot L_1 + Fe_2^{\frac{10}{3}} \cdot L_2 + Fe_3^{\frac{10}{3}} \cdot L_3\right)}$$

$$= \sqrt[\frac{10}{3}]{\frac{1}{500}\left(98^{\frac{10}{3}} \cdot 400 + 979^{\frac{10}{3}} \cdot 50 + 979^{\frac{10}{3}} \cdot 50\right)}$$

$$= 605 \text{ N}$$

$$L = 50 \times \left(\frac{C}{f_w \cdot Fm}\right)^{\frac{10}{3}}$$

$$= 50 \times \left(\frac{20\,900}{1.2 \cdot 605}\right)^{\frac{10}{3}}$$

$$= 3.65 \times 10^6 \text{ km}$$

3-1-2 Static Safety Factor

Divide the basic static load rating by the maximum load.

$$F_S = \frac{C_0}{Fe} = \frac{C_0}{Fe_2} = \frac{45\,000}{979} = 45.9$$

3-2 Ball Screw

3-2-1 Fatigue Life

Obtain the axial load of each stage of operation referring to the operation profile, and then calculate the mean load.
By the process above,

i) Constant speed

$Fe_1 = \mu \cdot W \cdot g = 0.01 \cdot 10 \cdot 9.8 = 0.98$ N

ii) Accelerating

$Fe_2 = Fe_1 + W \cdot \alpha = 0.98 + 10 \cdot 10 = 101$ N

iii) Decelerating

$Fe_3 = Fe_1 + W \cdot \alpha = 0.98 - 10 \cdot 10 = 99$ N

Axial mean effective load

$$Fm = \sqrt[3]{\frac{1}{L}\left(Fe_1^3 \cdot L_1 + Fe_2^3 \cdot L_2 + Fe_3^3 \cdot L_3\right)}$$

$$= \sqrt[3]{\frac{1}{500}\left(0.98^3 \cdot 400 + 101^3 \cdot 50 + 99^3 \cdot 50\right)}$$

$$= 59 \text{ N}$$

$$L = \ell \times \left(\frac{C_a}{f_w \cdot Fm}\right)^3 \times 10^6$$

$$= 20 \times \left(\frac{2\,260}{1.2 \cdot 59}\right)^3 \times 10^6$$

$$= 6.50 \times 10^5 \text{ km}$$

3-2-2 Static Safety Factor

Divide the basic static load rating by the maximum axial load.

$$F_S = \frac{C_{0a}}{Fe} = \frac{C_{0a}}{Fe_2} = \frac{3\,780}{101} = 37.4$$

3-3 Support Bearings

3-3-1 Fatigue Life

Use the axial load Fm = 59 N that is the result of the calculation in 3-2-1, above.

$$L = \ell \times \left(\frac{C_a}{f_w \cdot Fm}\right)^3 \times 10^6$$

$$= 20 \times \left(\frac{6\,600}{1.2 \cdot 59}\right)^3 \times 10^6$$

$$= 1.62 \times 10^7 \text{ km}$$

3-3-2 Static Safety Factor

Divide the limit load by the maximum axial load.

$$F_S = \frac{C_{0a}}{Fe} = \frac{C_{0a}}{Fe_2} = \frac{2\,700}{101} = 26.7$$

3-4 Result

TCH06050H20K00	Linear guide	Ball screw	Support bearings
Fatigue life	3.65 x 10^6 km	6.50 x 10^5 km	1.62 x 10^7 km
Static safety factor	45.9	37.4	26.7

Example of life estimation

Example-2

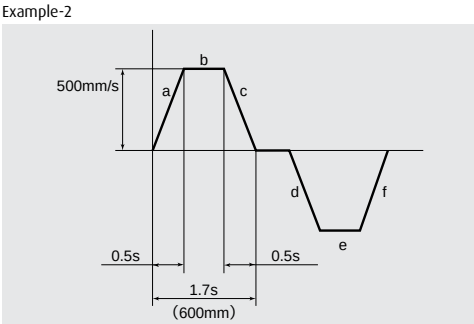

1 Use condition

Stroke : 600 mm
Maximum speed : 500 mm/s
Load mass : W = 20 kg
Acceleration : 9.8 m/s²
Setting position : Vertical
Operating profile : See above figure

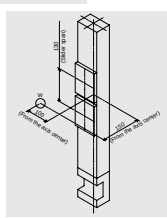

2 Selection of model number (interim selection)

Select a 10 mm lead ball screw as the maximum speed is 500 mm/s. The interim selection is TCH09067H10D00 (double slider specification) from the stroke and the vertical setting position.

3 Calculation

3-1 Linear Guide

3-1-1 Fatigue Life

Multiply the result of ② and ②' by the dynamic equivalent coefficient to convert the load volume. From operation profile in the above figure, the acceleration is 1 m/s². The interim slider span is 0.13.

Under this condition,
$F_H = 0$, $F_V = 0$, $M_R = 0$
in Eq., and both sliders have the same load with different direction.

i) Constant speed

$$Fe_1 = Y_H \cdot \frac{M_Y}{\ell} + Y_V \cdot \frac{M_P}{\ell}$$

$$= 0.5 \cdot \frac{0.1 \cdot 20 \cdot 9.8}{0.13} + 1.0 \cdot \frac{0.15 \cdot 20 \cdot 9.8}{0.13}$$

$$= 302 \text{ N}$$

ii) Accelerating

$$Fe_2 = Y_H \cdot \frac{M_Y}{\ell} + Y_V \cdot \frac{M_P}{\ell}$$

$$= 0.5 \cdot \frac{0.1 \cdot 20 \cdot (9.8 + 1.0)}{0.13} + 1.0 \cdot \frac{0.15 \cdot 20 \cdot (9.8 + 1.0)}{0.13}$$

$$= 333 \text{ N}$$

iii) Decelerating

$$Fe_3 = Y_H \cdot \frac{M_Y}{\ell} + Y_V \cdot \frac{M_P}{\ell}$$

$$= 0.5 \cdot \frac{0.1 \cdot 20 \cdot (9.8 - 1.0)}{0.13} + 1.0 \cdot \frac{0.15 \cdot 20 \cdot (9.8 - 1.0)}{0.13}$$

$$= 271 \text{ N}$$

Mean effective load Fm

$$Fm = \sqrt[\frac{10}{3}]{\frac{1}{L}\left(Fe_1^{\frac{10}{3}} \cdot L_1 + Fe_2^{\frac{10}{3}} \cdot L_2 + Fe_3^{\frac{10}{3}} \cdot L_3\right)}$$

$$= \sqrt[\frac{10}{3}]{\frac{1}{600}\left(302^{\frac{10}{3}} \cdot 350 + 333^{\frac{10}{3}} \cdot 125 + 271^{\frac{10}{3}} \cdot 125\right)}$$

$$= 304 \text{ N}$$

$$L = 50 \times \left(\frac{C}{f_w \cdot Fm}\right)^{\frac{10}{3}}$$

$$= 50 \times \left(\frac{44\,900}{1.2 \cdot 304}\right)^{\frac{10}{3}}$$

$$= 4.63 \times 10^8 \text{ km}$$

3-1-2 Static Safety Factor

Divide the basic static load rating by the maximum load.

$$F_S = \frac{C_0}{Fe} = \frac{C_0}{Fe_2} = \frac{96\,900}{333} = 290$$

3-2 Ball Screw

3-2-1 Fatigue Life

Obtain the axial load of each stage of operation referring to the operation profile, and then calculate the mean load.

i) Constant speed
$Fe_1 = W \cdot g = 20 \cdot 9.8 = 196$ N

ii) Accelerating
$Fe_2 = Fe_1 + W \cdot \alpha = 196 + 20 \cdot 1.0 = 216$ N

iii) Decelerating
$Fe_3 = Fe_1 - W \cdot \alpha = 196 - 20 \cdot 1.0 = 176$ N

Axial mean effective load Fm

$$Fm = \sqrt[3]{\frac{1}{L}\left(Fe_1^3 \cdot L_1 + Fe_2^3 \cdot L_2 + Fe_3^3 \cdot L_3\right)}$$

$$= \sqrt[3]{\frac{1}{600}\left(196^3 \cdot 350 + 216^3 \cdot 125 + 176^3 \cdot 125\right)}$$

$$= 197 \text{ N}$$

$$L = \ell \times \left(\frac{C_a}{f_w \cdot Fm}\right)^3 \times 10^6$$

$$= 10 \times \left(\frac{7\,060}{1.2 \cdot 197}\right)^3 \times 10^6$$

$$= 2.66 \times 10^5 \text{ km}$$

3-2-2 Static Safety Factor

Divide the basic static load rating by the maximum axial load.

$$Fs = \frac{C_{0a}}{Fe} = \frac{C_{0a}}{Fe_2} = \frac{12\,700}{216} = 58.7$$

3-3 Support Bearings

3-3-1 Fatigue Life

Use the axial load Fm = 197 N that is the result of the calculation in 3-2-1, above.

$$L = \ell \times \left(\frac{C_a}{f_w \cdot Fm}\right)^3 \times 10^6$$

$$= 10 \times \left(\frac{8\,800}{1.2 \cdot 197}\right)^3 \times 10^6$$

$$= 5.15 \times 10^5 \text{ km}$$

3-3-2 Static Safety Factor

Divide the limit load by the maximum axial load.

$$Fs = \frac{C_{0a}}{Fe} = \frac{C_{0a}}{Fe_2} = \frac{5\,090}{216} = 23.5$$

3-4 Result

TCH09067H10D00	Linear guide	Ball screw	Support bearings
Fatigue life	4.63 x 10^8 km	2.66 x 10^5 km	5.15 x 10^5 km
Static safety factor	290	58.7	23.5

Notes

4.5 TCH Series Dimension Table of Standard Products

4.5.1 TCH06 series

TCH06 Standard Slider Specifications (with pin holes)

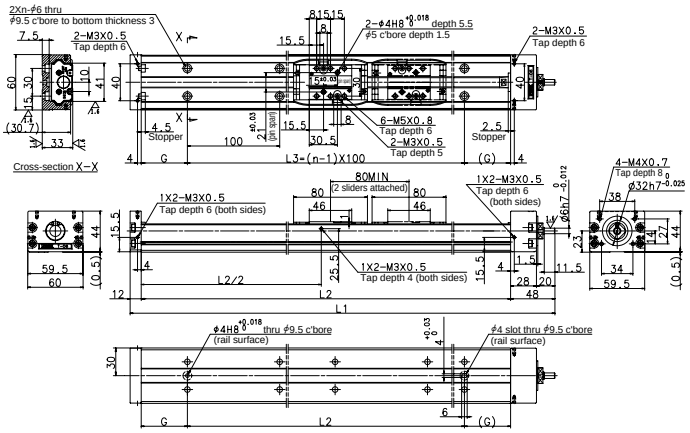

Toughcarrier dynamic torque specifications

Unit: N · cm

Model no.	Slider specifications	Ball screw lead (mm)	Accuracy grade	
			High grade	Precision grade
TCH06	Single standard slider	5	1.0 ~ 6.0	1.8 ~ 9.0
		10	1.1 ~ 7.2	2.0 ~ 10.6
		20	1.6 ~ 9.5	2.2 ~ 12.9
	Double standard slider	5	1.2 ~ 7.2	2.0 ~ 10.1
		10	1.2 ~ 9.5	2.2 ~ 12.9
		20	1.8 ~ 14.1	2.8 ~ 17.5

TCH06 Short Slider Specifications (with pin holes)

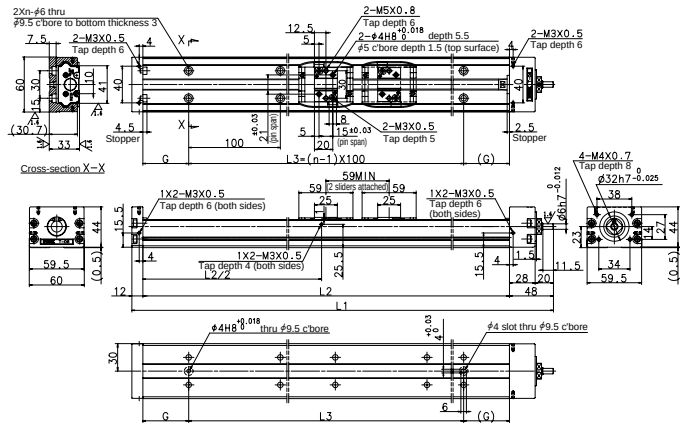

Toughcarrier dynamic torque specifications

Unit: N · cm

Model no.	Slider specifications	Ball screw lead (mm)	Accuracy grade	
			High grade	Precision grade
TCH06	Single short slider	5	0.8 ~ 5.9	1.8 ~ 8.9
		10	1.0 ~ 7.0	2.0 ~ 10.4
	Double short slider	5	1.0 ~ 7.0	2.0 ~ 10.0
		10	1.2 ~ 9.2	2.2 ~ 12.6

TCH06 Standard Slider Specifications (Single)

Reference number	Nominal stroke (mm)	Stroke limit (mm)	Ball screw lead (mm)	Body length (mm)				No. of mounting holes n	Inertia $\times 10^{-6}$ (kg · m^2)	Mass (kg)
				L_1	L_2	L_3	G			
* TCH06005H05K00 (01)			5						2.94	
* TCH06005H10K00 (01)	50	63	10	210	150	100	25	2	3.38	2.2
* TCH06005H20K00 (01)			20						5.10	
* TCH06010H05K00 (01)			5						3.74	
* TCH06010H10K00 (01)	100	113	10	260	200	100	50	2	4.18	2.5
* TCH06010H20K00 (01)			20						5.90	
TCH06020H05K00 (01)			5						5.34	
TCH06020H10K00 (01)	200	213	10	360	300	200	50	3	5.78	3.3
TCH06020H20K00 (01)			20						7.50	
TCH06030H05K00 (01)			5						6.84	
TCH06030H10K00 (01)	300	313	10	460	400	300	50	4	7.28	3.9
TCH06030H20K00 (01)			20						9.00	
TCH06040H05K00 (01)			5						8.44	
TCH06040H10K00 (01)	400	413	10	560	500	400	50	5	8.88	4.6
TCH06040H20K00 (01)			20						10.60	
TCH06050H05K00 (01)			5						10.10	
TCH06050H10K00 (01)	500	513	10	660	600	500	50	6	10.50	5.3
TCH06050H20K00 (01)			20						12.20	

TCH06 Standard Slider Specifications (Double)

Reference number	Nominal stroke (mm)	Stroke limit (mm)	Ball screw lead (mm)	Body length (mm)				No. of mounting holes n	Inertia $\times 10^{-6}$ (kg · m^2)	Mass (kg)
				L_1	L_2	L_3	G			
* TCH06013H05D00 (01)	130	134	5	360	300	200	50	3	5.47	3.6
* TCH06013H10D00 (01)			10						6.32	
* TCH06023H05D00 (01)	230	234	5	460	400	300	50	4	7.06	4.2
* TCH06023H10D00 (01)			10						7.91	
* TCH06033H05D00 (01)	330	334	5	560	500	400	50	5	8.64	4.9
* TCH06033H10D00 (01)			10						9.49	
TCH06043H10D00 (01)	430	434	10	660	600	500	50	6	11.08	5.6
TCH06043H20D00 (01)			20						14.40	

TCH06 Short Slider Specifications (Single)

Reference number	Nominal stroke (mm)	Stroke limit (mm)	Ball screw lead (mm)	Body length (mm)				No. of mounting holes n	Inertia $\times 10^{-6}$ (kg · m^2)	Mass (kg)
				L_1	L_2	L_3	G			
* TCH06007H05A00 (01)	70	82	5	210	150	100	25	2	2.87	2.1
* TCH06007H10A00 (01)			10						3.06	
* TCH06012H05A00 (01)	120	132	5	260	200	100	50	2	3.67	2.4
* TCH06012H10A00 (01)			10						3.86	
TCH06022H05A00 (01)	220	232	5	360	300	200	50	3	5.27	3.2
TCH06022H10A00 (01)			10						5.46	
TCH06032H05A00 (01)	320	332	5	460	400	300	50	4	6.77	3.8
TCH06032H10A00 (01)			10						6.96	
TCH06042H05A00 (01)	420	432	5	560	500	400	50	5	8.37	4.5
TCH06042H10A00 (01)			10						8.56	
TCH06052H05A00 (01)	520	532	5	660	600	500	50	6	9.97	5.2
TCH06052H10A00 (01)			10						10.20	

TCH06 Short Slider Specifications (Double)

Reference number	Nominal stroke (mm)	Stroke limit (mm)	Ball screw lead (mm)	Body length (mm)				No. of mounting holes n	Inertia $\times 10^{-6}$ (kg · m^2)	Mass (kg)
				L_1	L_2	L_3	G			
* TCH06017H05B00 (01)	170	176	5	360	300	200	50	3	5.34	3.4
* TCH06017H10B00 (01)			10						5.81	
TCH06027H05B00 (01)	270	276	5	460	400	300	50	4	6.93	4.0
TCH06027H10B00 (01)			10						7.40	
TCH06037H05B00 (01)	370	376	5	560	500	400	50	5	8.51	4.7
TCH06037H10B00 (01)			10						8.98	
TCH06047H10B00 (01)	470	476	10	660	600	500	50	6	10.57	5.4

Items marked with * are unavailable for upside-down operation.

4.5.2 TCH09 Series

TCH09 Standard Slider Specifications (with pin holes)

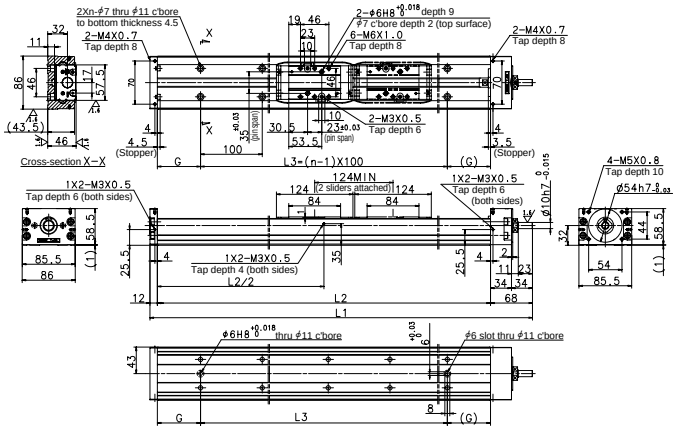

Toughcarrier dynamic torque specifications

Unit: N · cm

Model no.	Slider specifications	Ball screw lead (mm)	Accuracy grade	
			High grade	Precision grade
TCH09	Single standard slider	5	2.8 ~ 7.7	4.2 ~ 12.8
		10	3.7 ~ 9.5	4.5 ~ 15.1
		20	3.7 ~ 12.6	5.1 ~ 17.9
	Double standard slider	5	3.2 ~ 8.7	4.5 ~ 14.1
		10	4.2 ~ 12.6	5.1 ~ 17.9
		20	5.7 ~ 18.9	6.3 ~ 23.3

TCH09 Short Slider Specifications (with pin holes)

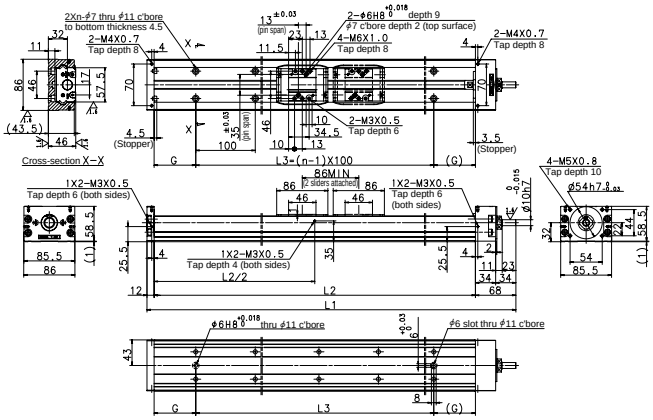

Toughcarrier dynamic torque specifications

Unit: N · cm

Model no.	Slider specifications	Ball screw lead (mm)	Accuracy grade	
			High grade	Precision grade
TCH09	Single short slider	5	2.0 ~ 6.9	3.5 ~ 12.0
		10	2.9 ~ 8.7	3.8 ~ 14.3
		20	2.9 ~ 11.8	4.3 ~ 17.1
	Double short slider	5	2.5 ~ 7.9	3.8 ~ 13.3
		10	3.4 ~ 11.8	4.3 ~ 17.1
		20	4.9 ~ 18.1	5.5 ~ 22.6

TCH09 Standard Slider Specifications (Single)

Reference number	Nominal stroke (mm)	Stroke limit (mm)	Ball screw lead (mm)	Body length (mm)				No. of mounting holes n	Inertia $\times 10^{-6}$ (kg · m^2)	Mass (kg)
				L_1	L_2	L_3	G			
* TCH09010H05K00 (01)			5						9.13	
* TCH09010H10K00 (01)	100	108	10	320	240	100	70	2	11.0	6.5
* TCH09010H20K00 (01)			20						18.6	
TCH09020H05K00 (01)			5						14.2	
TCH09020H10K00 (01)	200	208	10	420	340	200	70	3	16.0	7.9
TCH09020H20K00 (01)			20						23.6	
TCH09030H05K00 (01)			5						18.1	
TCH09030H10K00 (01)	300	308	10	520	440	300	70	4	19.9	9.4
TCH09030H20K00 (01)			20						27.5	
TCH09040H05K00 (01)			5						21.9	
TCH09040H10K00 (01)	400	408	10	620	540	400	70	5	23.8	10.8
TCH09040H20K00 (01)			20						31.4	
TCH09050H05K00 (01)			5						25.9	
TCH09050H10K00 (01)	500	508	10	720	640	500	70	6	27.7	12.3
TCH09050H20K00 (01)			20						35.3	
TCH09060H05K00 (01)			5						29.4	
TCH09060H10K00 (01)	600	608	10	820	740	600	70	7	31.3	13.6
TCH09060H20K00 (01)			20						38.9	
TCH09070H05K00 (01)			5						33.5	
TCH09070H10K00 (01)	700	708	10	920	840	700	70	8	35.4	15.0
TCH09070H20K00 (01)			20						43.0	
TCH09080H05K00 (01)			5						37.4	
TCH09080H10K00 (01)	800	808	10	1 020	940	800	70	9	39.3	16.4
TCH09080H20K00 (01)			20						46.9	

TCH09 Standard Slider Specifications (Double)

Reference number	Nominal stroke (mm)	Stroke limit (mm)	Ball screw lead (mm)	Body length (mm)				No. of mounting holes n	Inertia $\times 10^{-6}$ (kg · m^2)	Mass (kg)
				L_1	L_2	L_3	G			
* TCH09017H05D00 (01)	170	184	5	520	440	300	70	4	19.47	10.3
* TCH09017H10D00 (01)			10						22.89	
* TCH09027H05D00 (01)	270	284	5	620	540	400	70	5	23.35	11.7
* TCH09027H10D00 (01)			10						26.77	
TCH09037H05D00 (01)	370	384	5	720	640	500	70	6	27.22	13.2
TCH09037H10D00 (01)			10						30.64	
TCH09047H10D00 (01)	470	484	10	820	740	600	70	7	34.55	14.5
TCH09047H20D00 (01)			20						48.24	
TCH09067H10D00 (01)	670	684	10	1 020	940	800	70	9	42.27	17.3
TCH09067H20D00 (01)			20						55.96	

TCH09 Short Slider Specifications (Single)

Reference number	Nominal stroke (mm)	Stroke limit (mm)	Ball screw lead (mm)	Body length (mm)				No. of mounting holes n	Inertia $\times 10^{-6}$ (kg · m^2)	Mass (kg)
				L_1	L_2	L_3	G			
* TCH09014H05A00 (01)			5						8.9	
* TCH09014H10A00 (01)	140	146	10	320	240	100	70	2	10.1	6.1
* TCH09014H20A00 (01)			20						14.6	
TCH09024H05A00 (01)			5						13.9	
TCH09024H10A00 (01)	240	246	10	420	340	200	70	3	15.1	7.5
TCH09024H20A00 (01)			20						19.6	
TCH09034H05A00 (01)			5						17.8	
TCH09034H10A00 (01)	340	346	10	520	440	300	70	4	18.9	9.0
TCH09034H20A00 (01)			20						23.5	
TCH09044H05A00 (01)			5						21.7	
TCH09044H10A00 (01)	440	446	10	620	540	400	70	5	22.8	10.4
TCH09044H20A00 (01)			20						27.4	
TCH09054H05A00 (01)			5						25.6	
TCH09054H10A00 (01)	540	546	10	720	640	500	70	6	26.7	11.9
TCH09054H20A00 (01)			20						31.3	
TCH09064H05A00 (01)			5						29.2	
TCH09064H10A00 (01)	640	646	10	820	740	600	70	7	30.3	13.2
TCH09064H20A00 (01)			20						34.9	
TCH09074H05A00 (01)			5						33.3	
TCH09074H10A00 (01)	740	746	10	920	840	700	70	8	34.4	14.6
TCH09074H20A00 (01)			20						39.9	
TCH09084H05A00 (01)			5						37.2	
TCH09084H10A00 (01)	840	846	10	1 020	940	800	70	9	38.3	16.0
TCH09084H20A00 (01)			20						42.8	

TCH09 Short Slider Specifications (Double)

Reference number	Nominal stroke (mm)	Stroke limit (mm)	Ball screw lead (mm)	Body length (mm)				No. of mounting holes n	Inertia $\times 10^{-6}$ (kg · m^2)	Mass (kg)
				L_1	L_2	L_3	G			
TCH09025H05B00 (01)	250	260	5	520	440	300	70	4	18.96	9.5
TCH09025H10B00 (01)			10						20.86	
TCH09035H05B00 (01)	350	360	5	620	540	400	70	5	22.84	10.9
TCH09035H10B00 (01)			10						24.74	
TCH09045H05B00 (01)	450	460	5	720	640	500	70	6	26.71	12.4
TCH09045H10B00 (01)			10						28.61	
TCH09055H10B00 (01)	550	560	10	820	740	600	70	7	32.52	13.7
TCH09055H20B00 (01)			20						40.13	
TCH09075H10B00 (01)	750	760	10	1 020	940	800	70	9	40.24	16.5
TCH09075H20B00 (01)			20						47.85	

Items marked with * are unavailable for upside-down operation.

4.5.3 TCH 10 Series

TCH10 Standard Slider Specifications (with pin holes)

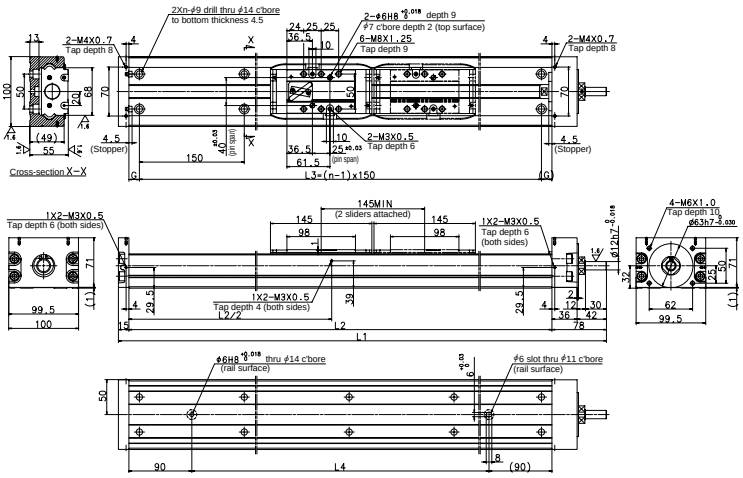

Toughcarrier dynamic torque specifications

Unit: N · cm

Model no.	Slider specifications	Ball screw lead (mm)	Accuracy grade	
			High grade	Precision grade
TCH10	Single standard slider	10	3.5 ~ 12.3	3.7 ~ 21.2
		20	4.1 ~ 16.6	4.3 ~ 25.5
	Double standard slider	10	4.1 ~ 16.6	4.3 ~ 25.5
		20	5.4 ~ 25.2	5.6 ~ 34.1

TCH10 Short Slider Specifications (with pin holes)

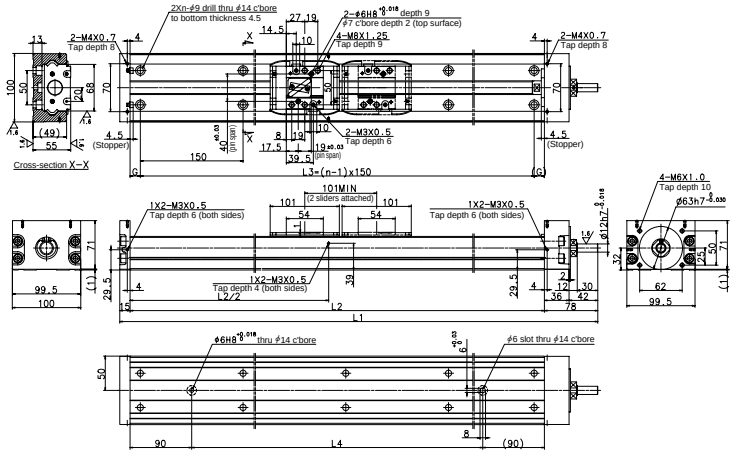

Toughcarrier dynamic torque specifications

Unit: N · cm

Model no.	Slider specifications	Ball screw lead (mm)	Accuracy grade	
			High grade	Precision grade
TCH10	Single short slider	10	3.6 ~ 11.7	3.8 ~ 20.5
		20	4.4 ~ 15.4	4.6 ~ 24.2
	Double short slider	10	4.4 ~ 15.4	4.6 ~ 24.2
		20	6.0 ~ 22.7	6.2 ~ 31.5

TCH10 Standard Slider Specifications (Single)

Reference number	Nominal stroke (mm)	Stroke limit (mm)	Ball screw lead (mm)	Body length (mm)					No. of mounting holes n	Inertia $\times 10^{-6}$ (kg · m^2)	Mass (kg)
				L_1	L_2	L_3	L_4	G			
* TCH10010H10K00 (01) * TCH10010H20K00 (01)	100	126	10 20	373	280	150	100	65	2	42.72 58.52	9.6
TCH10020H10K00 (01) TCH10020H20K00 (01)	200	226	10 20	473	380	300	200	40	3	54.97 65.62	11.5
TCH10030H10K00 (01) TCH10030H20K00 (01)	300	326	10 20	573	480	450	300	15	4	67.22 77.87	13.5
TCH10040H10K00 (01) TCH10040H20K00 (01)	400	426	10 20	673	580	450	400	65	4	79.47 90.12	15.4
TCH10050H10K00 (01) TCH10050H20K00 (01)	500	526	10 20	773	680	600	500	40	5	91.72 102.37	17.4
TCH10060H10K00 (01) TCH10060H20K00 (01)	600	626	10 20	873	780	750	600	15	6	104.02 114.67	19.3
TCH10070H10K00 (01) TCH10070H20K00 (01)	700	726	10 20	973	880	750	700	65	6	116.22 126.87	21.2
TCH10080H10K00 (01) TCH10080H20K00 (01)	800	826	10 20	1 073	980	900	800	40	7	128.52 139.17	23.2
TCH10090H10K00 (01) TCH10090H20K00 (01)	900	926	10 20	1 173	1 080	1 050	900	15	8	140.70 151.35	25.2
TCH10100H10K00 (01) TCH10100H20K00 (01)	1 000	1 026	10 20	1 273	1 180	1 050	1 000	65	8	152.94 163.59	27.1
TCH10110H10K00 (01) TCH10110H20K00 (01)	1 100	1 126	10 20	1 373	1 280	1 200	1 100	40	9	165.19 175.84	29.1
TCH10120H10K00 (01) TCH10120H20K00 (01)	1 200	1 226	10 20	1 473	1 380	1 350	1 200	15	10	177.43 188.08	31.1

TCH10 Standard Slider Specifications (Double)

Reference number	Nominal stroke (mm)	Stroke limit (mm)	Ball screw lead (mm)	Body length (mm)					No. of mounting holes n	Inertia $\times 10^{-6}$ (kg · m^2)	Mass (kg)
				L_1	L_2	L_3	L_4	G			
* TCH10027H10D00 (01) * TCH10027H20D00 (01)	270	281	10 20	673	580	450	400	65	4	83.02 104.31	16.8
* TCH10037H10D00 (01) * TCH10037H20D00 (01)	370	381	10 20	773	680	600	500	40	5	95.27 116.56	18.8
TCH10047H10D00 (01) TCH10047H20D00 (01)	470	481	10 20	873	780	750	600	15	6	107.57 128.86	20.7
TCH10057H10D00 (01) TCH10057H20D00 (01)	570	581	10 20	973	880	750	700	65	6	119.77 141.06	22.6
TCH10067H10D00 (01) TCH10067H20D00 (01)	670	681	10 20	1 073	980	900	800	40	7	132.07 153.36	24.6
TCH10077H20D00 (01)	770	781	20	1 173	1 080	1 050	900	15	8	165.54	26.6
TCH10087H20D00 (01)	870	881	20	1 273	1 180	1 050	1 000	65	8	177.78	28.5
TCH10097H20D00 (01)	970	981	20	1 373	1 280	1 200	1 100	40	9	190.03	30.5
TCH10107H20D00 (01)	1 070	1 081	20	1 473	1 380	1 350	1 200	15	10	202.27	32.5

TCH10 Short Slider Specifications (Single)

Reference number	Nominal stroke (mm)	Stroke limit (mm)	Ball screw lead (mm)	Body length (mm)					No. of mounting holes n	Inertia $\times 10^{-6}$ (kg · m^2)	Mass (kg)
				L_1	L_2	L_3	L_4	G			
* TCH10016H10A00 (01) * TCH10016H20A00 (01)	160	170	10 20	373	280	150	100	65	2	41.20 79.81	8.9
TCH10026H10A00 (01) TCH10026H20A00 (01)	260	270	10 20	473	380	300	200	40	3	53.45 59.54	10.9
TCH10036H10A00 (01) TCH10036H20A00 (01)	360	370	10 20	573	480	450	300	15	4	65.70 71.79	12.8
TCH10046H10A00 (01) TCH10046H20A00 (01)	460	470	10 20	673	580	450	400	65	4	77.95 84.04	14.8
TCH10056H10A00 (01) TCH10056H20A00 (01)	560	570	10 20	773	680	600	500	40	5	90.20 69.29	16.7
TCH10066H10A00 (01) TCH10066H20A00 (01)	660	670	10 20	873	780	750	600	15	6	102.50 108.59	18.6
TCH10076H10A00 (01) TCH10076H20A00 (01)	760	770	10 20	973	880	750	700	65	6	114.70 120.79	20.6
TCH10086H10A00 (01) TCH10086H20A00 (01)	860	870	10 20	1 073	980	900	800	40	7	127.00 133.09	22.6
TCH10096H10A00 (01) TCH10096H20A00 (01)	960	970	10 20	1 173	1 080	1 050	900	15	8	139.18 145.27	24.5
TCH10106H10A00 (01) TCH10106H20A00 (01)	1 060	1 070	10 20	1 273	1 180	1 050	1 000	65	8	151.42 157.51	26.5
TCH10116H10A00 (01) TCH10116H20A00 (01)	1 160	1 170	10 20	1 373	1 280	1 200	1 100	40	9	163.67 169.76	28.4
TCH10126H10A00 (01) TCH10126H20A00 (01)	1 260	1 270	10 20	1 473	1 380	1 350	1 200	15	10	175.91 182.00	30.4

TCH10 Short Slider Specifications (Double)

Reference number	Nominal stroke (mm)	Stroke limit (mm)	Ball screw lead (mm)	Body length (mm)					No. of mounting holes n	Inertia $\times 10^{-6}$ (kg · m^2)	Mass (kg)
				L_1	L_2	L_3	L_4	G			
TCH10036H10B00 (01) TCH10036H20B00 (01)	360	369	10 20	673	580	450	400	65	4	79.97 92.14	15.6
TCH10046H10B00 (01) TCH10046H20B00 (01)	460	469	10 20	773	680	600	500	40	5	92.22 104.39	17.5
TCH10056H10B00 (01) TCH10056H20B00 (01)	560	569	10 20	873	780	750	600	15	6	104.52 116.69	19.4
TCH10066H10B00 (01) TCH10066H20B00 (01)	660	669	10 20	973	880	750	700	65	6	116.72 128.89	21.4
TCH10076H10B00 (01) TCH10076H20B00 (01)	760	769	10 20	1 073	980	900	800	40	7	129.02 141.19	23.4
TCH10086H20B00 (01)	860	869	20	1 173	1 080	1 050	900	15	8	153.37	25.3
TCH10096H20B00 (01)	960	969	20	1 273	1 180	1 050	1 000	65	8	165.61	27.3
TCH10106H20B00 (01)	1 060	1 069	20	1 373	1 280	1 200	1 100	40	9	177.86	29.2
TCH10116H20B00 (01)	1 160	1 169	20	1 473	1 380	1 350	1 200	15	10	190.10	31.2

Items marked with * are unavailable for upside-down operation.

4.6 Accessory Specifications

4.6.1 Sensor Unit

Reference number

TC	-	SRH	XX	- 1	X
TOUGHCARRIER		SENSOR UNIT	NOMINAL SIZE		CODING FOR MODEL NO.

TC: Toughcarrier

0: Proximity switch (3 b-contacts)
1: Proximity switch (3 a-contacts)
2: Proximity switch (1 a-contact, 2-b contacts)
3: Photo sensor (3 sensors)

Proximity switch

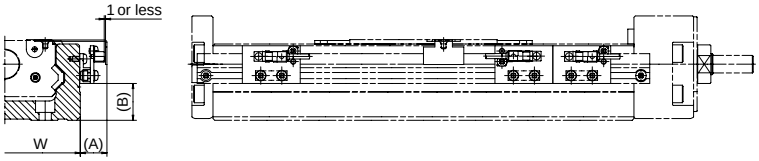

Model no.		Reference number			Dimensions		
					A (mm)	B (mm)	Body width W (mm)
TCH06		TC-SRH06-10	TC-SRH06-11	TC-SRH06-12	17	10	60
TCH09		TC-SRH09-10	TC-SRH09-11	TC-SRH09-12	16	21	86
TCH10		TC-SRH10-10	TC-SRH10-11	TC-SRH10-12	16	25	100
Quantity	Proximity switch (a-contact)	—	3	1	E2S-W13 (OMRON Corp.)		
	Proximity switch (b-contact)	3	—	2	E2S-W14 (OMRON Corp.)		

Photo sensor

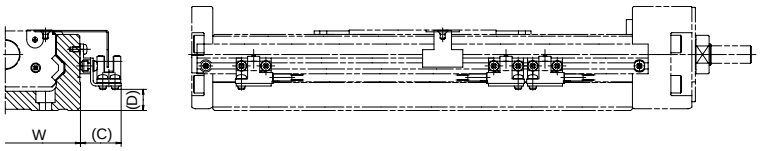

Model no.	Reference number	Dimensions			Note
		C (mm)	D (mm)	Body width W (mm)	
TCH06	TC-SRH06-13	24	2	60	EE-SX674 (OMRON Corp.) 3 sets
TCH09	TC-SRH09-13	24	12	86	(EE-1001 connector included)
TCH10	TC-SRH10-13	24	16	100	

(1) Sensor Rail

Reference number

TC	-	SRL	X	-	XXXX
TOUGHCARRIER		SENSOR RAIL	NOMINAL SIZE		BODY RAIL LENGTH

TC: Toughcarrier

6: 06
9: 09
1: 10

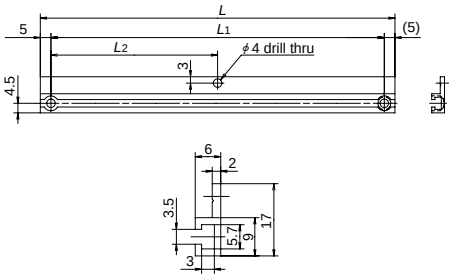

Model no.	Body rail length	Dimensions		
		L	L_1	L_2
TCH06	150	168	158	79
	200	218	208	104
	300	318	308	154
	400	418	408	204
	500	518	508	254
	600	618	608	304
TCH09	240	258	248	124
	340	358	348	174
	440	458	448	224
	540	558	548	274
	640	658	648	324
	740	758	748	374
	840	858	848	424
	940	958	948	474
TCH10	280	298	288	144
	380	398	388	194
	480	498	488	244
	580	598	588	294
	680	698	688	344
	780	798	788	394
	880	898	888	444
	980	998	988	494
	1 080	1 098	1 088	544
	1 180	1 198	1 188	594
	1 280	1 298	1 288	644
	1 380	1 398	1 388	694

4.6.2 Cover Unit

Cover Unit

TC-HV06XXXK00
TC-HV06XXXD00

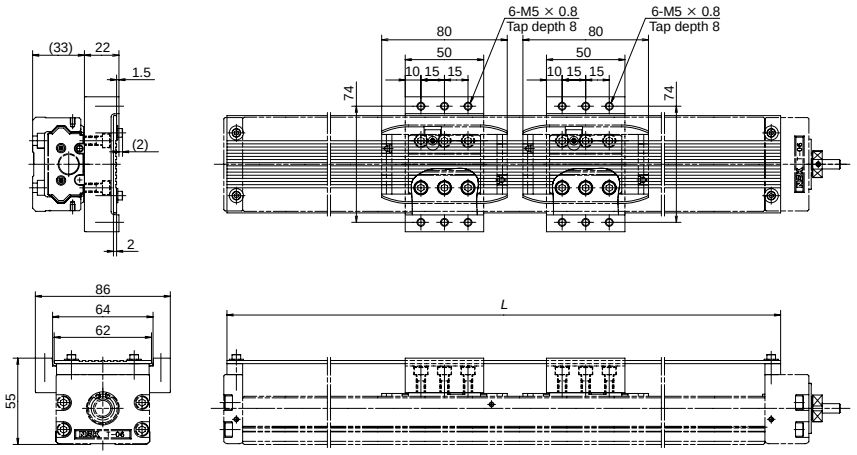

TC-HV06XXXA00
TC-HV06XXXB00

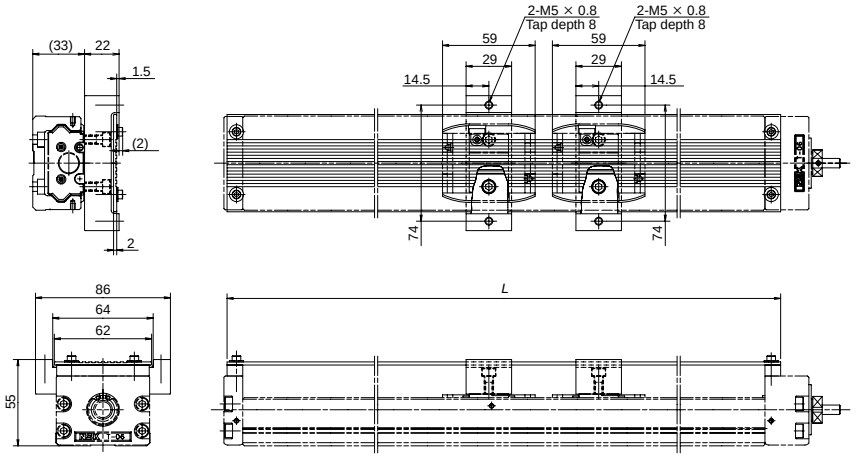

TCH06

Body rail length	Dimensions L	Slider specifications			
		Standard		Short	
		Single	Double	Single	Double
150	170	TC-HV06005K00	—	TC-HV06007A00	—
200	220	TC-HV06010K00	—	TC-HV06012A00	—
300	320	TC-HV06020K00	TC-HV06013D00	TC-HV06022A00	TC-HV06017B00
400	420	TC-HV06030K00	TC-HV06023D00	TC-HV06032A00	TC-HV06027B00
500	520	TC-HV06040K00	TC-HV06033D00	TC-HV06042A00	TC-HV06037B00
600	620	TC-HV06050K00	TC-HV06043D00	TC-HV06052A00	TC-HV06047B00

TC-HV09XXXK00
TC-HV09XXXD00

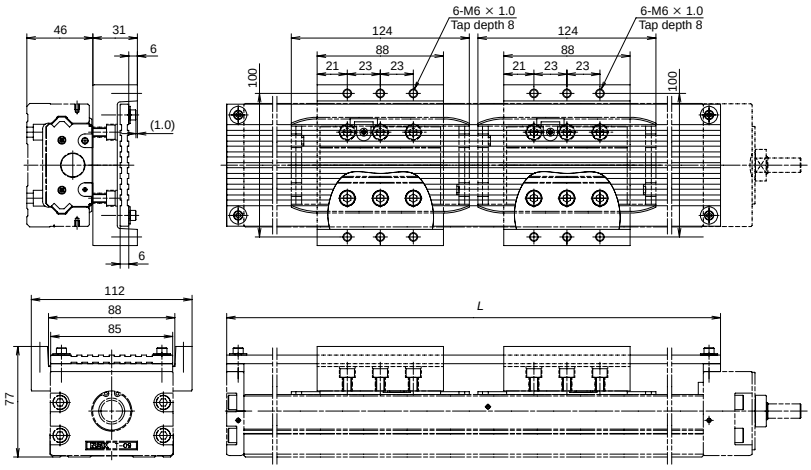

TC-HV09XXXA00
TC-HV09XXXB00

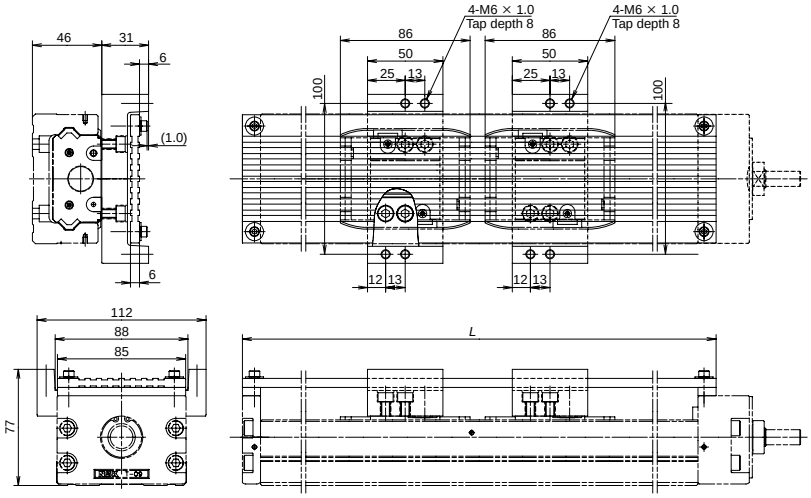

TCH09

Body rail length	Dimensions L	Slider specifications			
		Standard		Short	
		Single	Double	Single	Double
240	264	TC-HV09010K00	-	TC-HV09014A00	-
340	364	TC-HV09020K00	-	TC-HV09024A00	-
440	464	TC-HV09030K00	TC-HV09017D00	TC-HV09034A00	TC-HV09025B00
540	564	TC-HV09040K00	TC-HV09027D00	TC-HV09044A00	TC-HV09035B00
640	664	TC-HV09050K00	TC-HV09037D00	TC-HV09054A00	TC-HV09045B00
740	764	TC-HV09060K00	TC-HV09047D00	TC-HV09064A00	TC-HV09055B00
840	864	TC-HV09070K00	-	TC-HV09074A00	-
940	964	TC-HV09080K00	TC-HV09067D00	TC-HV09084A00	TC-HV09075B00

TC-HV10XXXK00
TC-HV10XXXD00

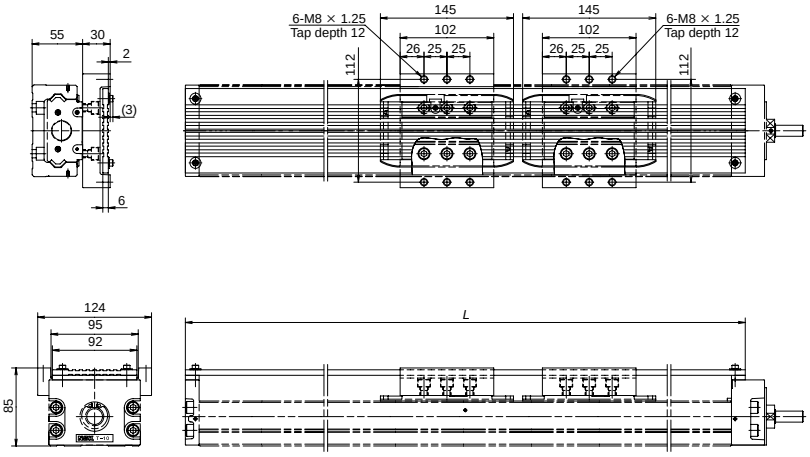

TC-HV10XXXA00
TC-HV10XXXB00

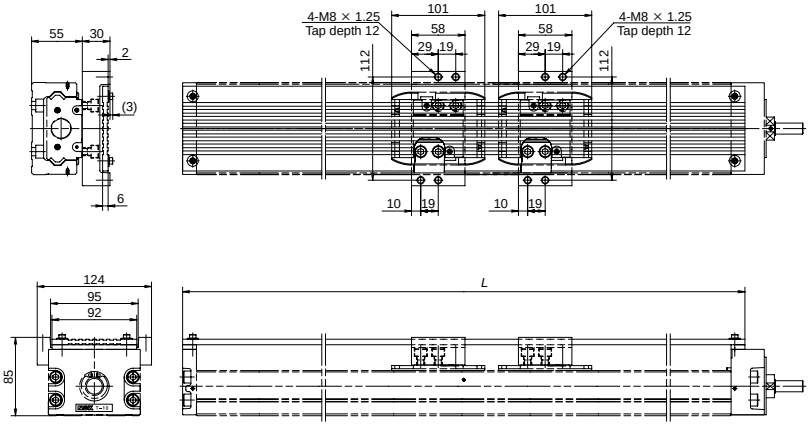

TCH10

Body rail length	Dimensions	Slider specifications			
		Standard		Short	
	L	Single	Double	Single	Double
280	310	TC-HV10010K00	-	TC-HV10016A00	-
380	410	TC-HV10020K00	-	TC-HV10026A00	-
480	510	TC-HV10030K00	-	TC-HV10036A00	-
580	610	TC-HV10040K00	TC-HV10027D00	TC-HV10046A00	TC-HV10036B00
680	710	TC-HV10050K00	TC-HV10037D00	TC-HV10056A00	TC-HV10046B00
780	810	TC-HV10060K00	TC-HV10047D00	TC-HV10066A00	TC-HV10056B00
880	910	TC-HV10070K00	TC-HV10057D00	TC-HV10076A00	TC-HV10066B00
980	1 010	TC-HV10080K00	TC-HV10067D00	TC-HV10086A00	TC-HV10076B00
1 080	1 110	TC-HV10090K00	TC-HV10077D00	TC-HV10096A00	TC-HV10086B00
1 180	1 210	TC-HV10100K00	TC-HV10087D00	TC-HV10106A00	TC-HV10096B00
1 280	1 310	TC-HV10110K00	TC-HV10097D00	TC-HV10116A00	TC-HV10106B00
1 380	1 410	TC-HV10120K00	TC-HV10107D00	TC-HV10126A00	TC-HV10116B00

4.6.3 Motor Bracket

Motor bracket

Motor models are subject to change by the motor manufacturers. For details, please contact the manufacturer. For motors other than applicable motors shown below, please contact NSK.

Reference number
TC-BKH06-145-00

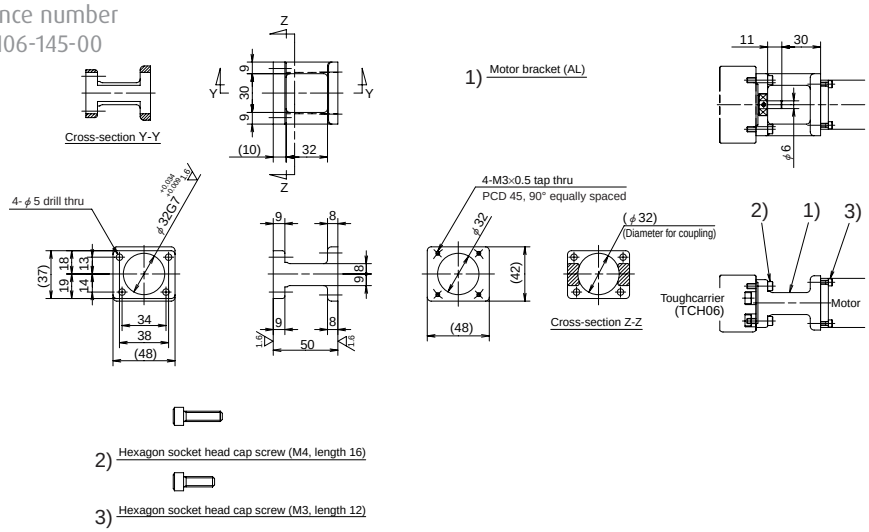

Notes: 1. Be sure to align the center lines when installing the motor.
2. Be careful of the assembly orientation of the bracket.
3. As the bracket is made by sand casting, the external dimensions are for reference only.

Applicable motors	
Manufacturer	Motor model
Panasonic Co., Ltd.	MSMD5A(50W), MSMD10(100W)

Reference number
TC-BKH06-146-00

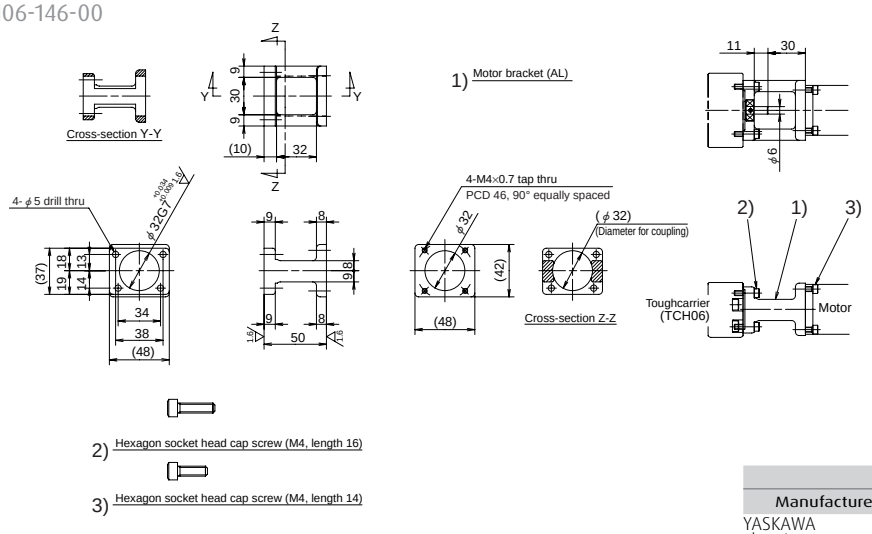

Notes: 1. Be sure to align the center lines when installing the motor.
2. Be careful of the assembly orientation of the bracket.
3. As the bracket is made by sand casting, the external dimensions are for reference only.

Applicable motors	
Manufacturer	Motor model
YASKAWA Electric Corp.	SGMJV-A5A(50W), SGMAV-A5A(50W), SGMJV-01A(100W), SGMAV-01A(100W), SGMAV-C2A(150W), SGMJV-C2A(150W)
Mitsubishi Electric Corp.	HF-KP053(50W), HF-MP053(50W), HC-KFS053(50W), HCMFS053(50W), HF-KP13(100W), HF-MP13(100W), HCKFS13(100W), HC-MFS13(100W)
OMRON Corp.	R88M-W03(30W), R88M-W05(50W), R88M-W10(100W)
SANYO DENKI Co., Ltd.	P30B04003(30W), P30B04005(50W), P30B04010(100W), R2AA04005(50W), R2AA04010(100W)

Reference number
TC-BKH06-148-00

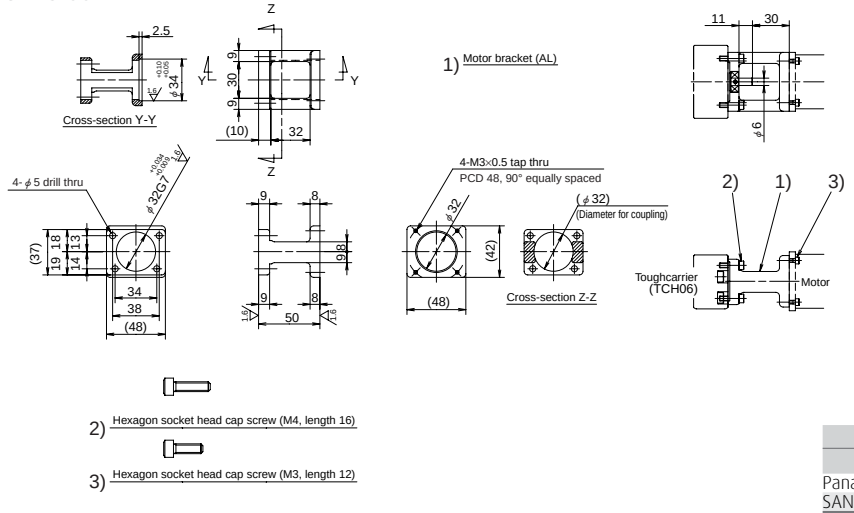

Notes: 1. Be sure to align the center lines when installing the motor.
2. Be careful of the assembly orientation of the bracket.
3. As the bracket is made by sand casting, the external dimensions are for reference only.

Applicable motors	
Manufacturer	Motor model
Panasonic Co., Ltd.	MAMA01(100W)
SANYO DENKI Co., Ltd.	P50B04006(60W), P50B04010(100W)

Reference number
TC-BKH06-160-00

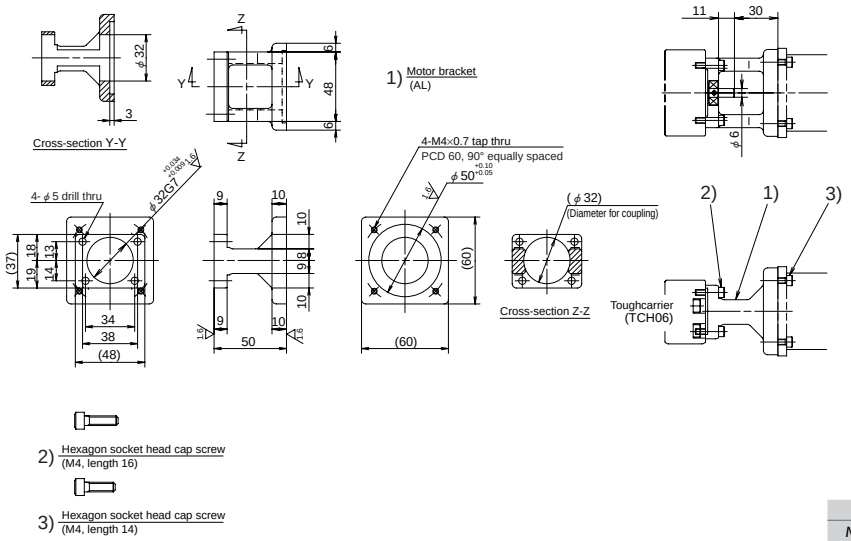

Notes: 1. Be sure to align the center lines when installing the motor.
2. Be careful of the assembly orientation of the bracket.
3. As the bracket is made by sand casting, the external dimensions are for reference only.

Applicable motors	
Manufacturer	Motor model
SANYO DENKI Co., Ltd.	P50B05005(50W), P50B05010(100W), P50B05020(200W)

Reference number
TC-BKH06-250-00

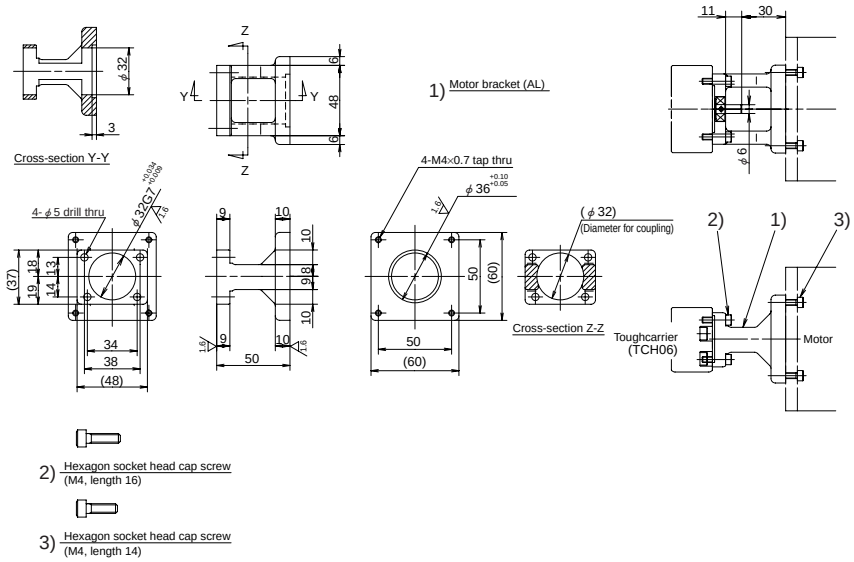

2) Hexagon socket head cap screw
(M4, length 16)

3) Hexagon socket head cap screw
(M4, length 14)

Notes: 1. Be sure to align the center lines when installing the motor.
2. Be careful of the assembly orientation of the bracket.
3. As the bracket is made by sand casting, the external dimensions are for reference only.

Applicable motors	
Manufacturer	Motor model
SANYO DENKI Co., Ltd.	PBM603XXX, PBM604XXX, 103F78XX
ORIENTAL MOTOR Co., Ltd.	AS66, ASC66, UPK56X, PK56X, CSK56X, CFK56X, UFK56X

Reference number
TC-BKH09-145-00

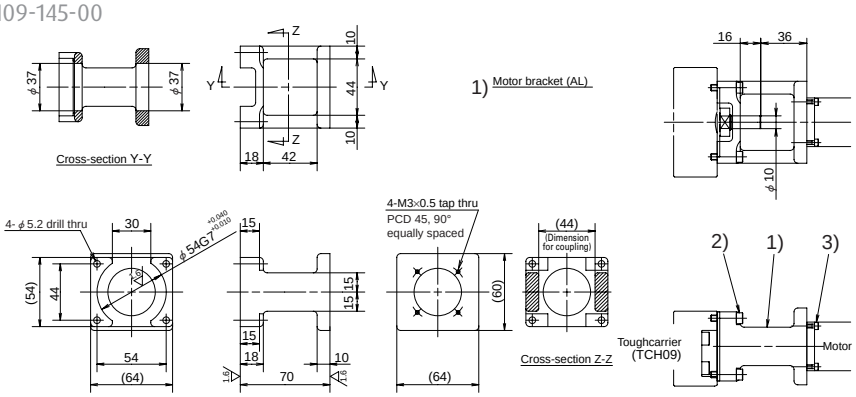

2) Hexagon socket head cap screw (M5, length 20)

3) Hexagon socket head cap screw (M3, length 12)

Notes: 1. Be sure to align the center lines when installing the motor.
2. Be careful of the assembly orientation of the bracket.
3. As the bracket is made by sand casting, the external dimensions are for reference only.

Applicable motors	
Manufacturer	Motor model
Panasonic Co., Ltd.	MSMD01(100W)

Reference number
TC-BKH09-146-00

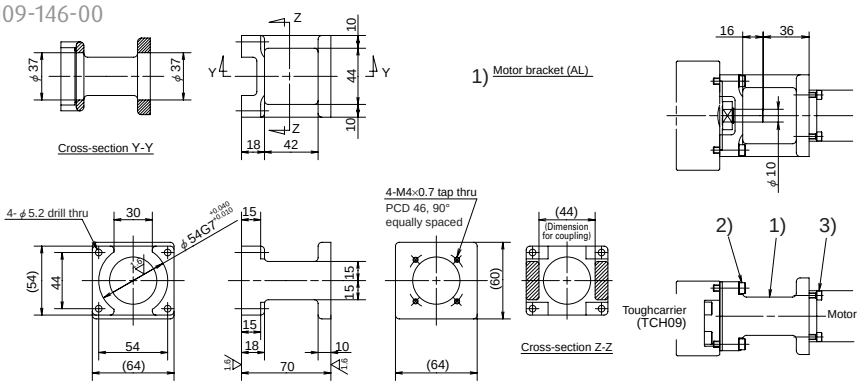

2) Hexagon socket head cap screw (M5, length 20)

3) Hexagon socket head cap screw (M4, length 14)

Notes: 1. Be sure to align the center lines when installing the motor.
2. Be careful of the assembly orientation of the bracket.
3. As the bracket is made by sand casting, the external dimensions are for reference only.

Applicable motors	
Manufacturer	Motor model
YASKAWA Electric Corp.	SGMJV-01A(100W), SGMAV-01A(100W), SGMAV-C2A(150W), SGMJV-C2A(150W)
Mitsubishi Electric Corp.	HF-KP13(100W), HF-MP13(100W), HC-KFS13(100W), HC-MFS13(100W)
OMRON Corp.	P30B04005(50W), P30B04010(100W), R2AA04010(100W)

Reference number
TC-BKH09-160-00

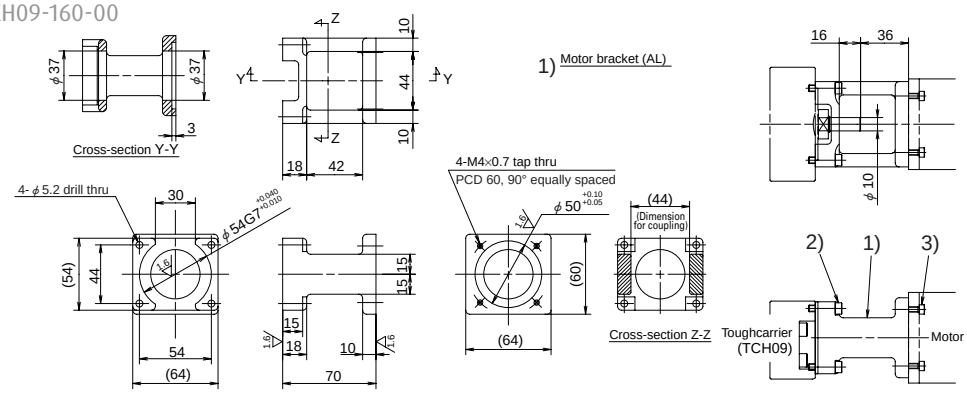

2) Hexagon socket head cap screw (M5, length 20)

3) Hexagon socket head cap screw (M4, length 14)

Notes: 1. Be sure to align the center lines when installing the motor.
2. Be careful of the assembly orientation of the bracket.
3. As the bracket is made by sand casting, the external dimensions are for reference only.

Applicable motors	
Manufacturer	Motor model
SANYO DENKI Co., Ltd.	P50B05005(50W), P50B05010(100W), P50B05020(200W)

Reference number
TC-BKH09-170-00

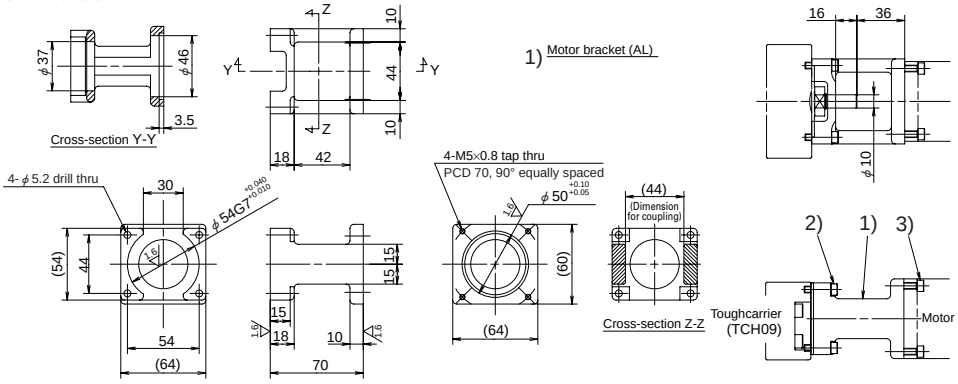

2) Hexagon socket head cap screw (M5, length 20)

3) Hexagon socket head cap screw (M5, length 14)

Notes: 1. Be sure to align the center lines when installing the motor.
2. Be careful of the assembly orientation of the bracket.
3. As the bracket is made by sand casting, the external dimensions are for reference only.

Applicable motors	
Manufacturer	Motor model
YASKAWA Electric Corp.	SGMJV-02A(200W), SGMAV-02A(200W), SGMJV-04A(400W), SGMAV-04A(400W)
Mitsubishi Electric Corp.	HF-KP23(200W), HF-MP23(200W), HF-KP43(400W), HF-MP43(400W), HC-KFS23(200W), HC-MFS23(200W), HC-KFS43(400W), HC-MFS43(400W)
OMRON Corp.	R88M-W20(200W), R88M-W40(400W)
SANYO DENKI Co., Ltd.	P50B06020(200W), P30B06040(400W), R2AA06010(100W), R2AA06020(200W), R2A06040(400W)

Reference number
TC-BKH09-170-01

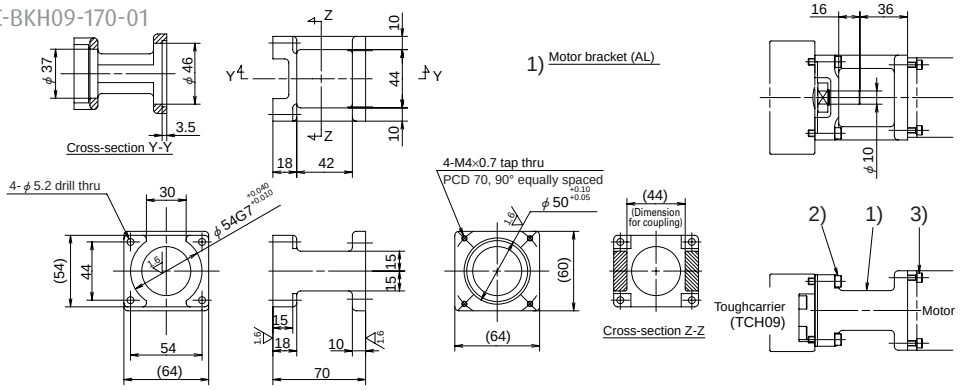

1) Motor bracket (AL)

2) Hexagon socket head cap screw (M5, length 20)

3) Hexagon socket head cap screw (M4, length 14)

Notes: 1. Be sure to align the center lines when installing the motor.
2. Be careful of the assembly orientation of the bracket.
3. As the bracket is made by sand casting, the external dimensions are for reference only.

Applicable motors	
Manufacturer	Motor model
Panasonic Co., Ltd.	MSMD02(200W), MAMA02(200W), MSMD04(400W), MAMA04(400W)

Reference number
TC-BKH09-190-00

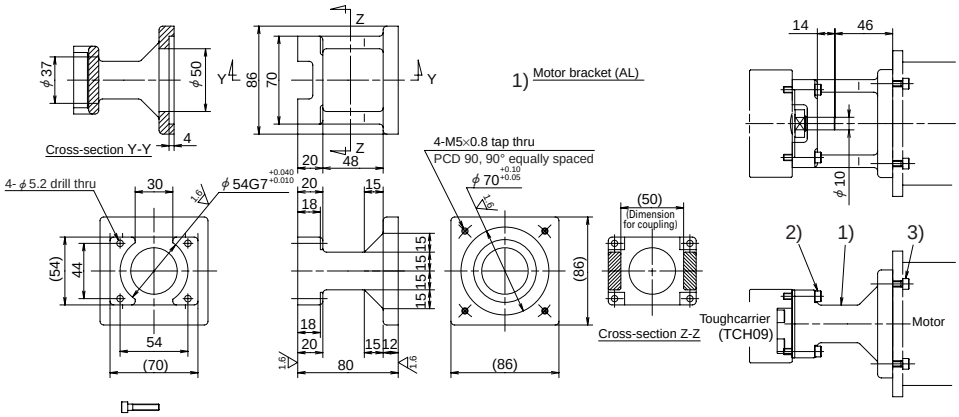

1) Motor bracket (AL)

2) Hexagon socket head cap screw (M5, length 25)

3) Hexagon socket head cap screw (M5, length 16)

Notes: 1. Be sure to align the center lines when installing the motor.
2. Be careful of the assembly orientation of the bracket.
3. As the bracket is made by sand casting, the external dimensions are for reference only.

Applicable motors	
Manufacturer	Motor model
SANYO DENKI Co., Ltd.	P50B07020(200W), P50B07030(300W), P50B07040(400W)

Reference number
TC-BKH09-250-00

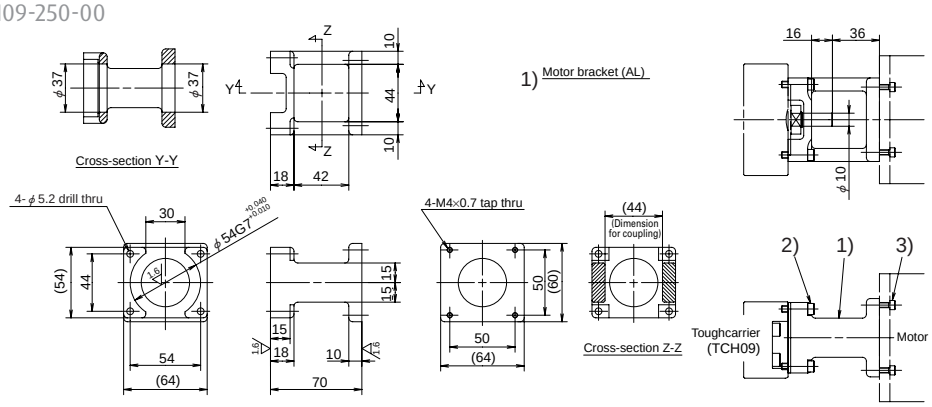

1) Motor bracket (AL)

2) Hexagon socket head cap screw (M5, length 20)

3) Hexagon socket head cap screw (M4, length 14)

Notes: 1. Be sure to align the center lines when installing the motor.
2. Be careful of the assembly orientation of the bracket.
3. As the bracket is made by sand casting, the external dimensions are for reference only.

Applicable motors	
Manufacturer	Motor model
SANYO DENKI Co., Ltd.	PBM603XXX, PBM604XXX, 103F78XX
ORIENTAL MOTOR Co., Ltd.	AS66, ASC66, UPK56XX, PK56XX, CSK56X, CFK56X, UFK56X

Reference number
TC-BKH09-270-00

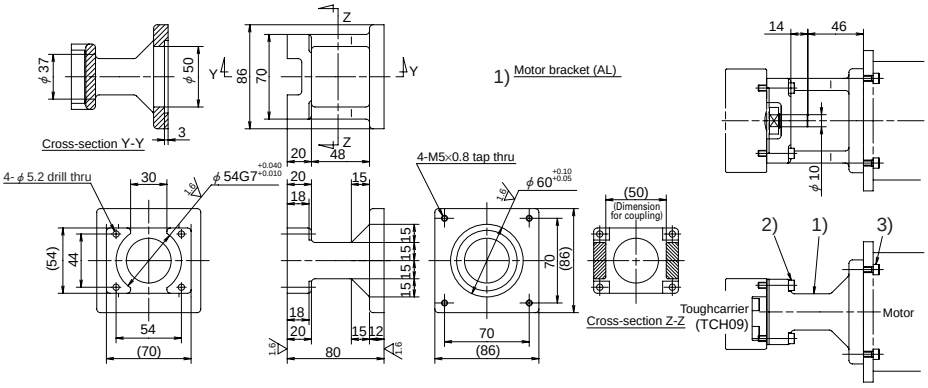

1) Motor bracket (AL)

2) Hexagon socket head cap screw (M5, length 25)

3) Hexagon socket head cap screw (M5, length 16)

Notes: 1. Be sure to align the center lines when installing the motor.
2. Be careful of the assembly orientation of the bracket.
3. As the bracket is made by sand casting, the external dimensions are for reference only.

Applicable motors	
Manufacturer	Motor model
SANYO DENKI Co., Ltd.	103F85XX
ORIENTAL MOTOR Co., Ltd.	AS98, UPK59X, PK59X, CSK56X, CFK59X, UFK59X

Reference number
TC-BKH10-170-00

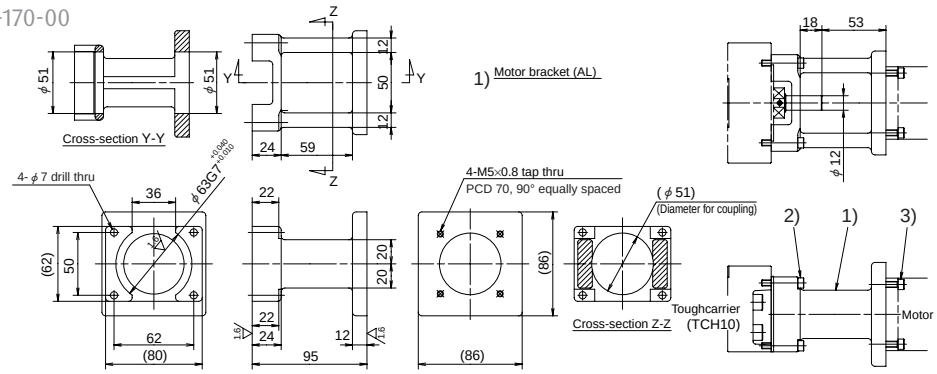

2) Hexagon socket head cap screw (M6, length 30)

3) Hexagon socket head cap screw (M5, length 20)

Notes: 1. Be sure to align the center lines when installing the motor.
2. Be careful of the assembly orientation of the bracket.
3. As the bracket is made by sand casting, the external dimensions are for reference only.

Applicable motors	
Manufacturer	Motor model
YASKAWA Electric Corp.	SGMJV-02A(200W), SGMAV-02A(200W), SGMJV-04A(400W), SGMAV-04A(400W)
Mitsubishi Electric Corp.	HF-KP23(200W), HF-MP23(200W), HF-KP43(400W), HF-MP43(400W), HC-KFS23(200W), HC-MFS23(200W), HC-KFS43(400W), HC-MFS43(400W)
OMRON Corp.	R88M-W20(200W), R88M-W40(400W)
SANYO DENKI Co., Ltd.	P30B06020(200W), P30B06040(400W), R2AA06020(200W), R2A06040(400W)

Reference number
TC-BKH10-170-01

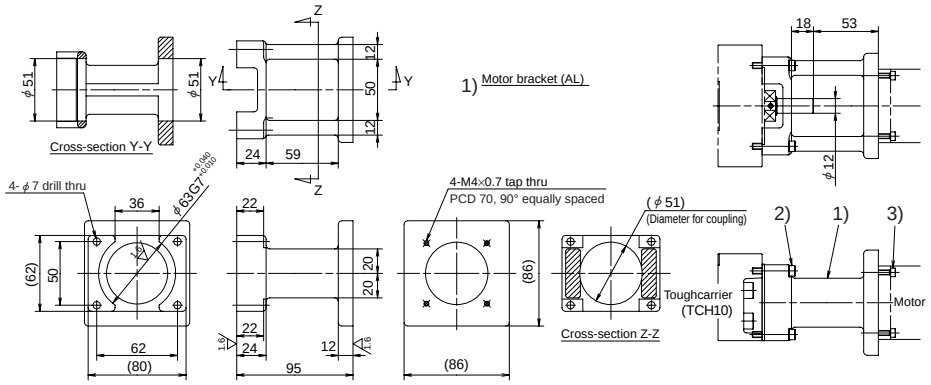

2) Hexagon socket head cap screw (M6, length 30)

3) Hexagon socket head cap screw (M4, length 16)

Notes: 1. Be sure to align the center lines when installing the motor.
2. Be careful of the assembly orientation of the bracket.
3. As the bracket is made by sand casting, the external dimensions are for reference only.

Applicable motors	
Manufacturer	Motor model
Panasonic Co., Ltd.	MSMD02(200W), MAMA02(200W), MSMD04(400W), MAMA04(400W)

Reference number
TC-BKH10-190-00

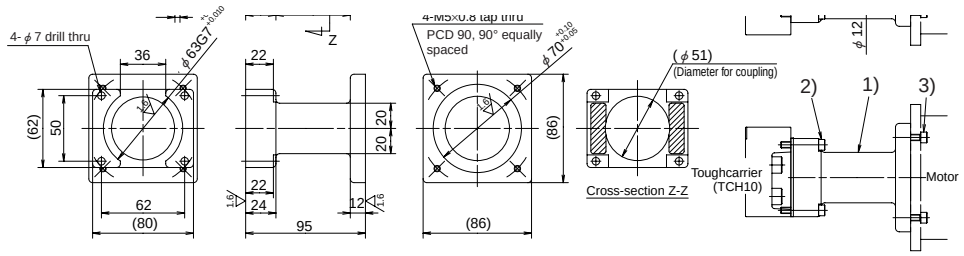

2) Hexagon socket head cap screw (M6, length 30)

3) Hexagon socket head cap screw (M5, length 16)

Notes: 1. Be sure to align the center lines when installing the motor.
2. Be careful of the assembly orientation of the bracket.
3. As the bracket is made by sand casting, the external dimensions are for reference only.

Applicable motors	
Manufacturer	Motor model
Panasonic Co., Ltd.	MSMD08(750W), MAMA08(750W)
SANYO DENKI Co., Ltd.	P50B07020(200W), P50B07030(300W), P50B07040(400W)

Reference number
TC-BKH10-270-00

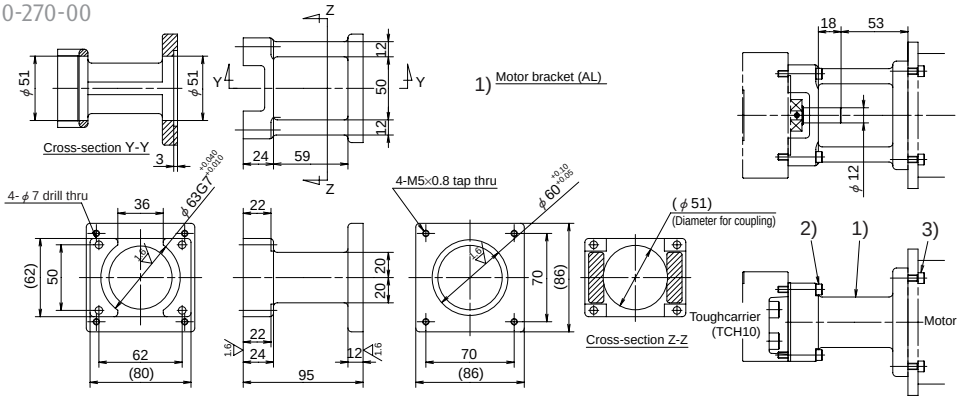

2) Hexagon socket head cap screw (M6, length 30)

3) Hexagon socket head cap screw (M5, length 16)

Notes: 1. Be sure to align the center lines when installing the motor.
2. Be careful of the assembly orientation of the bracket.
3. As the bracket is made by sand casting, the external dimensions are for reference only.

Applicable motors	
Manufacturer	Motor model
SANYO DENKI Co., Ltd.	103FB5XX
ORIENTAL MOTOR Co., Ltd.	AS98, UPK59X, PK59X, CSK59X, CFK59X, UFK59X

4.7 Motor Bracket Compatibility Table

Model No.	Reference number	Motor manufacturer	Stepping motor model no.	Wattage of AC servo motor								
				30W	50W	60W	100W	150W	200W	300W	400W	750W
TCH06	TC-BKH06-145-00	Panasonic Co., Ltd.			MSMD5A		MSMD10					
	TC-BKH06-146-00	YASKAWA Electric Corp.			SGMJV-A5A SGMAV-A5A		SGMJV-01A SGMAV-01A	SGMJV-C2A SGMAV-C2A				
		Mitsubishi Electric Corp.			HF-KP053 HF-MP053 HC-KFS053 HC-MFS053		HF-KP13 HF-MP13 HC-KFS13 HC-MFS13					
		OMRON Corp.		R88M-W03	R88M-W05		R88M-W10					
		SANYO DENKI Co., Ltd.		P30B04003	P30B04005 R2AA04005		P30B04010 R2AA04010					
	TC-BKH06-148-00	Panasonic Co., Ltd.					MAMA01					
		SANYO DENKI Co., Ltd.				P50B04006	P50B04010					
	TC-BKH06-160-00	SANYO DENKI Co., Ltd.			P50B05005		P50B05010		P50B05020			
	TC-BKH06-250-00	SANYO DENKI Co., Ltd.	PBM603XXX PBM604XXX 103F78XX									
		ORIENTAL MOTOR Co., Ltd.	AS66 ASC66 UPK56X PK56X CSK56X CFK56X UFK56X									
TCH09	TC-BKH09-145-00	Panasonic Co., Ltd.					MSMD01					
	TC-BKH09-146-00	YASKAWA Electric Corp.					SGMJV-01A SGMAV-01A	SGMJV-C2A SGMAV-C2A				
		Mitsubishi Electric Corp.					HF-KP13 HF-MP13 HC-KFS13 HC-MFS13					
		SANYO DENKI Co., Ltd.			P30B04005		P30B04010 R2AA04010					
	TC-BKH09-160-00	SANYO DENKI Co., Ltd.			P50B05005		P50B05010		P50B05020			
	TC-BKH09-170-00	YASKAWA Electric Corp.							SGMJV-02A SGMAV-02A		SGMJV-04A SGMAV-04A	
		Mitsubishi Electric Corp.							HF-KP23 HF-MP23 HC-KFS23 HC-MFS23		HF-KP43 HF-MP43 HC-KFS43 HC-MFS43	
		OMRON Corp.							R88M-W20		R88M-W40	
		SANYO DENKI Co., Ltd.					R2AA06010		P30B06020 R2AA06020		P30B06040 R2AA06040	
	TC-BKH09-170-01	Panasonic Co., Ltd.							MSMD02 MAMA02		MSMD04 MAMA04	
	TC-BKH09-190-00	SANYO DENKI Co., Ltd.							P50B07020	P50B07030	P50B07040	
	TC-BKH09-250-00	SANYO DENKI Co., Ltd.	PBM603XXX PBM604XXX 103F78XX									
		ORIENTAL MOTOR Co., Ltd.	AS66 ASC66 UPK56X PK56X CSK56X CFK56X UFK56X									
	TC-BKH09-270-00	ORIENTAL MOTOR Co., Ltd.	AS98 UPK59X PK59X CSK59X CFK59X UFK59X									
		SANYO DENKI Co., Ltd.	103F85XX									
TCH10	TC-BKH10-170-00	YASKAWA Electric Corp.							SGMJV-02A SGMAV-02A		SGMJV-04A SGMAV-04A	
		Mitsubishi Electric Corp.							HF-KP23 HF-MP23 HC-KFS23 HC-MFS23		HF-KP43 HF-MP43 HC-KFS43 HC-MFS43	
		OMRON Corp.							R88M-W20		R88M-W40	
		SANYO DENKI Co., Ltd.							P30B06020 R2AA06020		P30B06040 R2AA06040	
	TC-BKH10-170-01	Panasonic Co., Ltd.							MSMD02 MAMA02		MSMD04 MAMA04	
	TC-BKH10-190-00	Panasonic Co., Ltd.										MSMD08 MAMA08
		SANYO DENKI Co., Ltd.							P50B07020	P50B07030	P50B07040	
	TC-BKH10-270-00	SANYO DENKI Co., Ltd.	103FB5XX									
		ORIENTAL MOTOR Co., Ltd.	AS98 UPK59X PK59X CSK59X CFK59X UFK59X									

4.8 Sensor Rail and Top Cover Unit Combination Table

Model No.	Reference number	Rail length (L_2)	Sensor rail reference number	Cover unit reference number
TCH06	TCH06005H05K00 TCH06005H10K00 TCH06005H20K00	150	TC-SRL6-0150	TC-HV06005K00
	TCH06007H05A00 TCH06007H10A00			TC-HV06007A00
	TCH06010H05K00 TCH06010H10K00 TCH06010H20K00	200	TC-SRL6-0200	TC-HV06010K00
	TCH06012H05A00 TCH06012H10A00			TC-HV06012A00
	TCH06020H05K00 TCH06020H10K00 TCH06020H20K00	300	TC-SRL6-0300	TC-HV06020K00
	TCH06013H05D00 TCH06013H10D00			TC-HV06013D00
	TCH06022H05A00 TCH06022H10A00			TC-HV06022A00
	TCH06017H05B00 TCH06017H10B00			TC-HV06017B00
	TCH06030H05K00 TCH06030H10K00 TCH06030H20K00	400	TC-SRL6-0400	TC-HV06030K00
	TCH06023H05D00 TCH06023H10D00			TC-HV06023D00
	TCH06032H05A00 TCH06032H10A00			TC-HV06032A00
	TCH06027H05B00 TCH06027H10B00			TC-HV06027B00
	TCH06040H05K00 TCH06040H10K00 TCH06040H20K00	500	TC-SRL6-0500	TC-HV06040K00
	TCH06033H05D00 TCH06033H10D00			TC-HV06033D00
	TCH06042H05A00 TCH06042H10A00			TC-HV06042A00
	TCH06037H05B00 TCH06037H10B00			TC-HV06037B00
	TCH06050H05K00 TCH06050H10K00 TCH06050H20K00	600	TC-SRL6-0600	TC-HV06050K00
	TCH06043H10D00 TCH06043H20D00			TC-HV06043D00
	TCH06052H05A00 TCH06052H10A00 TCH06047H10B00			TC-HV06052A00 TC-HV06047B00

- Sensor rail reference numbers are determined according to the rail length. Select a sensor rail appropriate for your requirements.
- Shapes and numbers of spacer plates for cover unit are selected according to slider specifications.

Model No.	Reference number	Rail length (L_2)	Sensor rail reference number	Cover unit reference number
TCH09	TCH09010H05K00 TCH09010H10K00 TCH09010H20K00	240	TC-SRL9-0240	TC-HV09010K00
	TCH09014H05A00 TCH09014H10A00 TCH09014H20A00			TC-HV09014A00
	TCH09020H05K00 TCH09020H10K00 TCH09020H20K00	340	TC-SRL9-0340	TC-HV09020K00
	TCH09024H05A00 TCH09024H10A00 TCH09024H20A00			TC-HV09024A00
	TCH09030H05K00 TCH09030H10K00 TCH09030H20K00	440	TC-SRL9-0440	TC-HV09030K00
	TCH09017H05D00 TCH09017H10D00			TC-HV09017D00
	TCH09034H05A00 TCH09034H10A00 TCH09034H20A00			TC-HV09034A00
	TCH09025H05B00 TCH09025H10B00			TC-HV09025B00
	TCH09040H05K00 TCH09040H10K00 TCH09040H20K00	540	TC-SRL9-0540	TC-HV09040K00
	TCH09027H05D00 TCH09027H10D00			TC-HV09027D00
	TCH09044H05A00 TCH09044H10A00 TCH09044H20A00			TC-HV09044A00
	TCH09035H05B00 TCH09035H10B00			TC-HV09035B00
	TCH09050H05K00 TCH09050H10K00 TCH09050H20K00	640	TC-SRL9-0640	TC-HV09050K00
	TCH09037H05D00 TCH09037H10D00 TCH09054H05A00			TC-HV09037D00 TC-HV09054A00
	TCH09054H10A00 TCH09054H20A00 TCH09045H05B00 TCH09045H10B00			TC-HV09045B00
	TCH09060H05K00 TCH09060H10K00 TCH09060H20K00	740	TC-SRL9-0740	TC-HV09060K00
	TCH09047H10D00 TCH09047H20D00			TC-HV09047D00
	TCH09064H05A00 TCH09064H10A00 TCH09064H20A00			TC-HV09064A00
	TCH09055H10B00 TCH09055H20B00			TC-HV09055B00
	TCH09070H05K00 TCH09070H10K00 TCH09070H20K00	840	TC-SRL9-0840	TC-HV09070K00
	TCH09074H05A00 TCH09074H10A00 TCH09074H20A00			TC-HV09074A00
	TCH09080H05K00 TCH09080H10K00 TCH09080H20K00	940	TC-SRL9-0940	TC-HV09080K00
	TCH09067H10D00 TCH09067H20D00			TC-HV09067D00
	TCH09084H05A00 TCH09084H10A00 TCH09084H20A00			TC-HV09084A00
	TCH09075H10B00 TCH09075H20B00			TC-HV09075B00

・Sensor rail reference numbers are determined according to the rail length. Select a sensor rail appropriate for your requirements.
・Shapes and numbers of spacer plates for cover unit are selected according to slider specifications.

Model No.	Reference number	Rail length (L_2)	Sensor rail reference number	Cover unit reference number
TCH10	TCH10010H10K00 TCH10010H20K00	280	TC-SRL1-0280	TC-HV10010K00
	TCH10016H10A00 TCH10016H20A00			TC-HV10016A00
	TCH10020H10K00 TCH10020H20K00	380	TC-SRL1-0380	TC-HV10020K00
	TCH10026H10A00 TCH10026H20A00			TC-HV10026A00
	TCH10030H10K00 TCH10030H20K00	480	TC-SRL1-0480	TC-HV10030K00
	TCH10036H10A00 TCH10036H10A00			TC-HV10036A00
	TCH10040H10K00 TCH10040H20K00	580	TC-SRL1-0580	TC-HV10040K00
	TCH10027H10D00 TCH10027H20D00			TC-HV10027D00
	TCH10046H10A00 TCH10046H20A00			TC-HV10046A00
	TCH10036H10B00 TCH10036H20B00			TC-HV10036B00
	TCH10050H10K00 TCH10050H20K00	680	TC-SRL1-0680	TC-HV10050K00
	TCH10037H10D00 TCH10037H20D00			TC-HV10037D00
	TCH10056H10A00 TCH10056H20A00			TC-HV10056A00
	TCH10046H10B00 TCH10046H20B00			TC-HV10046B00
	TCH10060H10K00 TCH10060H20K00	780	TC-SRL1-0780	TC-HV10060K00
	TCH10047H10D00 TCH10047H20D00			TC-HV10047D00
	TCH10066H10A00 TCH10066H20A00			TC-HV10066A00
	TCH10056H10B00 TCH10056H20B00			TC-HV10056B00
	TCH10070H10K00 TCH10070H20K00	880	TC-SRL1-0880	TC-HV10070K00
	TCH10057H10D00 TCH10057H20D00			TC-HV10057D00
	TCH10076H10A00 TCH10076H20A00			TC-HV10076A00
	TCH10066H10B00 TCH10066H20B00			TC-HV10066B00
	TCH10080H10K00 TCH10080H20K00	980	TC-SRL1-0980	TC-HV10080K00
	TCH10067H10D00 TCH10067H20D00			TC-HV10067D00
	TCH10086H10A00 TCH10086H20A00			TC-HV10086A00
	TCH10076H10B00 TCH10076H20B00			TC-HV10076B00
	TCH10090H10K00 TCH10090H20K00	1 080	TC-SRL1-1080	TC-HV10090K00
	TCH10077H20D00			TC-HV10077D00
	TCH10096H10A00 TCH10096H20A00			TC-HV10096A00
	TCH10086H20B00			TC-HV10086B00
	TCH10100H10K00 TCH10100H20K00	1 180	TC-SRL1-1180	TC-HV10100K00
	TCH10087H20D00			TC-HV10087D00
	TCH10106H10A00 TCH10106H20A00			TC-HV10106A00
	TCH10096H20B00			TC-HV10096B00
	TCH10110H10K00 TCH10110H20K00	1 280	TC-SRL1-1280	TC-HV10110K00
	TCH10097H20D00			TC-HV10097D00
	TCH10116H10A00 TCH10116H20A00			TC-HV10116A00
	TCH10106H20B00			TC-HV10106B00
	TCH10120H10K00 TCH10120H20K00	1 380	TC-SRL1-1380	TC-HV10120K00
	TCH10107H20D00			TC-HV10107D00
	TCH10126H10A00 TCH10126H20A00			TC-HV10126A00
	TCH10116H20B00			TC-HV10116B00

・ Sensor rail reference numbers are determined according to the rail length. Select a sensor rail appropriate for your requirements.
・ Shapes and numbers of spacer plates for cover unit are selected according to slider specifications.

4.9 Toughcarrier High-Thrust Series (Special product)

Specifications

The life of the feeding system is improved by use of higher load capacity ball screw part and support bearings for standard Toughcarrier.

		TCH06		TCH09		TCH10	
Ball screw	Shaft diameter (mm)	12		20		25	
	Lead (mm)	10	20	10	20	20	25
	Basic dynamic load rating Ca (N)	3 760	2 970	11 500	8 790	9 760	9 760
	Basic static load rating Coa (N)	6 310	4 240	25 700	18 500	23 600	23 600
Linear guide	Basic dynamic load rating C (N)	20 900		44 900		62 400	
	Basic static load rating Co (N)	45 000		96 900		132 000	
Support bearings	Basic dynamic load rating (N)	5 900		18 800		21 900	
	Load limit (N)	3 500		11 500		26 600	

1) Only compatible with standard slider.

2) Applicable strokes are as follows.

TCH06: Stroke 500 mm

TCH09: Stroke 800 mm

TCH10: Stroke 1 200 mm

3) High and precision grades are available for accuracy

Features

1) Mounting dimensions are the same as Monocarrier MCH Series and standard Toughcarrier (Interchangeable).

2) Permissible rotational speed is faster than standard Toughcarrier due to different ball recirculation system.

Technical Materials

5.1 Sensor Specification
5.1.1 Proximity Switch 139
5.1.2 Photo Sensor 140
5.2 Characteristics and Evaluation Method
5.2.1 Positioning Accuracy 141
5.2.2 Running Parallelism 141
5.2.3 Repeatability 141
5.3 Special Specifications 142
5.4 Maintenance
5.4.1 Maintenance Method 143
5.4.2 NSK K1™ Lubricant Unit 143
5.5 NSK Clean Grease LG2 Specification 144

5.1 Sensor Specification
5.1.1 Proximity Switch

Use of OMRON E2S-W13, E2S-W14

Item	E2S-W13 type	E2S-W14 type
Setting surface	Front face	
Sensing distance	1.6mm ± 15%	
Setting distance	0 to 1.2mm	
Differential travel	10% max. of sensing distance	
Detectable object type	Ferrous metal	
Standard sensing object	Iron, 12 x 12 x 1 mm	
Response frequency	1 kHz min.	
Power supply voltage (operating voltage range)	12 to 24 V DC, ripple (p-p): 10% max. (10 to 30 V DC)	
Current consumption	13 mA max. at 24 V DC with no load	
Control output (Switching capacity)	NPN open collector output 50 mA max. (30 V DC max.)	
Control output (Residual voltage)	1.0 V max. with a load current of 50 mA and a cable length of 1 m	
Indicator	Operation indicator (orange)	
Operating status (with sensing object approaching)	NO (Normally open contact)	NC (Normally closed contact)
Wire lead length	1000 mm	

Notes: 1. Do not make a wrong connection.
2. Please contact NSK for PNP output type.

Movement Mode	Output Type	Type	Time Chart	Output Circuit
NO	NPN	E2S-W13 type	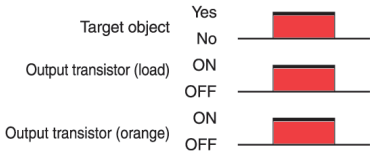	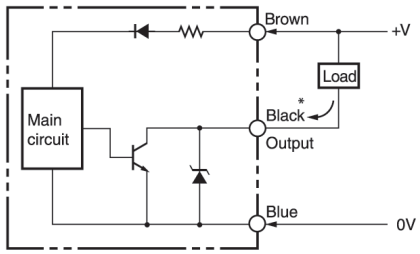 *(Maximum load current: 50mA)
NC		E2S-W14 type		

E2S-W13 (Normally open contact)
E2S-W14 (Normally close contact)
The external appearances are the same.

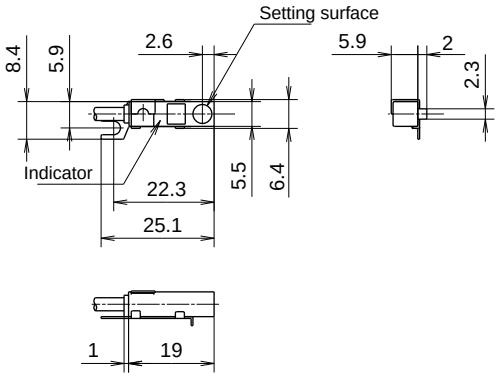

5.1.2 Photo Sensor

Use of OMRON EE-SX674

Item	EE-SX674 type
Slot width	5mm
Standard reference object	Opaque: 2 x 0.8mm
Differential distance	0.025mm
Light source	GaAs infrared LED with a peak wavelength of 940 nm
Indicator (without detecting object)	ON GaP red LED (peak emission wavelength: 690 nm)
Supply voltage	5 to 24VDC ±10%, ripple: (p-p) 10% max.
Current consumption	35 mA max.
Control output	NPN open collector output models, 5 to 24 VD, 100 mA load current
Response frequency	1kHz max. (3kHz typ.)
Ambient illumination	Fluorescent light: 1,000 ℓ x max.
Ambient temperature	Operating: -25˚C to 55˚C (-13˚F to 131˚F) Storage: -30˚C to 80˚C (-22˚F to 176˚F)
Ambient humidity	Operating: 5 to 85%RH Storage: 5 to 95%RH
Connecting method	EE-1001/1006 Connectors; soldering terminals

Notes: 1. Do not make a wrong connection.
2. Please contact NSK for PNP output type.

Type	Movement Mode	Time Chart	Connection Terminal	Output Circuit
EE-SX674 type	Light-ON	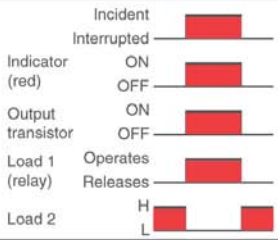	When terminals L and ⊕ are short circuited	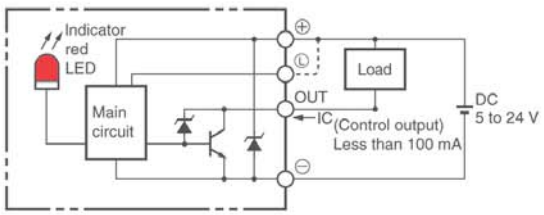
	Dark-ON	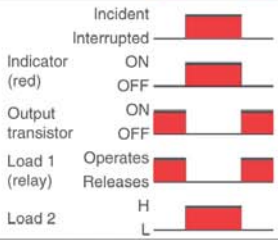	When terminals L and ⊕ are open circuited	

EE-SX674 (Sensor)
EE-1001 (Connector)
A connector is mounted to the sensor in the right figure.

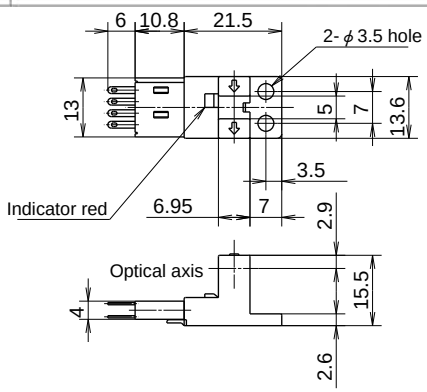

5.2 Characteristics and Evaluation Method

5.2.1 Positioning Accuracy

Perform positioning successively from the reference position in a specific direction. Measure the difference between the actual and desired travel distances for each point from the reference position. Repeat this measurement seven times to determine the average value. Measure the average value over the entire travel distance at the intervals specified for each model and take the maximum difference of the average values determined at respective positions as the measured value.

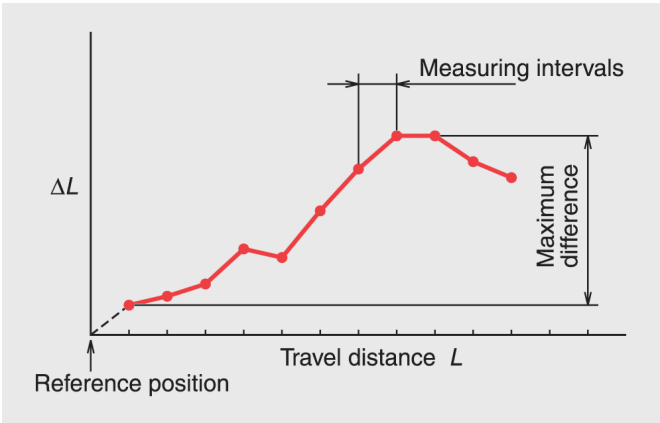

5.2.2 Running Parallelism (Vertical Direction)

We specify the parallelism of slider to the datum bottom surface of rail. An indicator is moved in the axial slider making its stylus slightly touching on the rail bottom surface. The slider is moved in the axial direction for the checking. We define the total indicator reading as the running parallelism. During the checking, the rail is not fixed to the table base. Please be aware that, in general application, the rail is fixed to the machine base, and thus the wobbly rolling error will be added to the running parallelism.

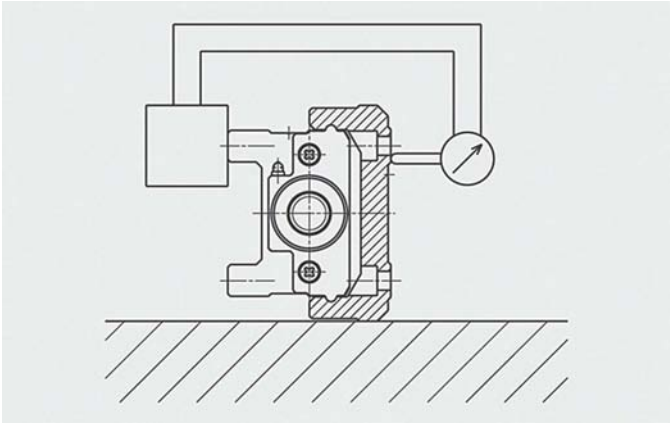

Setting of Indicator

5.2.3 Repeatability

Repeat positioning at any point seven times from the same direction to measure the stopping position and determine one half of the maximum difference of readings. Repeat this measurement over the entire travel distance at the intervals specified for each model. Take the maximum difference of the determined values as the measured value. Express one half of the maximum difference with a plus or minus ± sign.

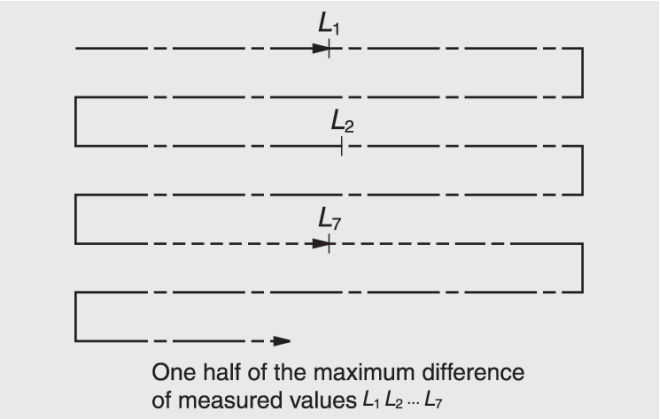

5.3 Special Specifications

Please consult NSK if your requirement is not in the standard products.

(1) Surface Treatment

- Fluoride low temperature chrome plating

Note: Ball screw parts (including low temperature chrome plating).

(2) Special Machining (Processing)

i) Shaft end processing
- Key way processing
- One flat or two flats processing

ii) Pin hole processing
- Slider
- Rail

Note: Due to interference with the internal construction, the position of pin hole is limited. Please consult with NSK about the pin position.

(3) Motor Bracket and Intermediate Plate for Motor Mounting

- We can provide motor mounting brackets and intermediate plates that are not listed in the catalog.
- We can attach motor upon request if the motor is provided or specified in advance.

Note: Motion check of the motor is unavailable.

(4) Reversed Motor Mount

The reversed motor mount is available. Please consult NSK.

Note: 1) We do not check motor running condition.

(5) Right and Left Turn Thread

Right and left turn ball screw is available. Please consult with NSK for available leads.

(6) Ball-Screw-Less Specification (Only Linear Guide Part)

A ball-screw-less rail part with the same cross section of standard Monocarriers is available for a driven linear guide. It will lessen a height adjustment work compared with a construction with two standard Monocarriers.

Note: Height grinding adjustment of the two axes assembly is not available.

5.4 Maintenance

5.4.1 Maintenance Method

1. For standard Monocarrier, we pack grease in the slider, linear guides and ball screw.
2. Monocarriers are equipped with NSK K1 Lubrication Unit as a standard feature, therefore, you may use it for 5 years or 10,000 km depending on your application, whichever comes first, without maintenance. However, replenishment of preceded grease may extend its life substantially.
3. The NSK K1 Lubrication Unit is ideal in environments where oily dust exists. However, the life may be shorter than described in Clause 2 above. In such a case, it requires increasing the frequency of replenishment.
4. A nozzle for the NSK grease pump for MCH Monocarriers is available as an option.

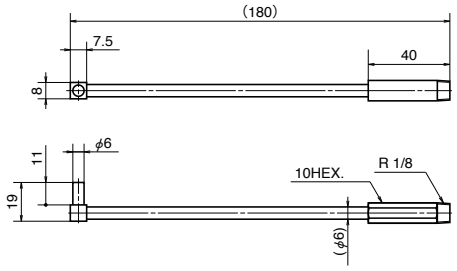

NSK HGP NZ8

Precautions for Handling

1. Please consult with NSK when the motor is coupled to the ball screw using a pulley because there is a restriction on the allowable load to the end of the ball screw shaft.
2. To extend the high performance of NSK K1™ Lubrication Unit, please observe the following:

1. Temperature range	Ambient temperature:	50˚C
	Max. instantaneous temperature:	80˚C
2. Use of chemicals	Never leave a Monocarrier™ in close proximity to grease removing organic solvents such as hexane or thinner. Never immerse it in an anti-rust solvent that contains kerosene.	

Note: Other oils, such as water-based and oil-based cutting oil and grease, do not cause any problems.

5.4.2 NSK K1™ Lubrication Unit

NSK K1™ Lubrication Unit exhibits outstanding features, confirmed by abundant experimental data, along with the proven performance of linear guides and ball screws that are equipped with NSK K1™ Lubrication Unit.

(1) High-Speed Durability Test of Linear Guides Without Lubricant

Results of high-speed durability testing of a linear guide without lubricant are shown in chart to right. While the linear guide cannot be operated without lubricant for even short periods without damage, the installation of the NSK K1™ Lubrication Unit permits the linear guide to run over 25,000 km without any problem.

Conditions	Test piece: LH30AN (Preload Z1) Speed: 3.3 m/s Stroke: 1,800 mm
No lubricant	All grease removed
NSK K1™ Lubricant Unit	All grease removed + NSK K1™

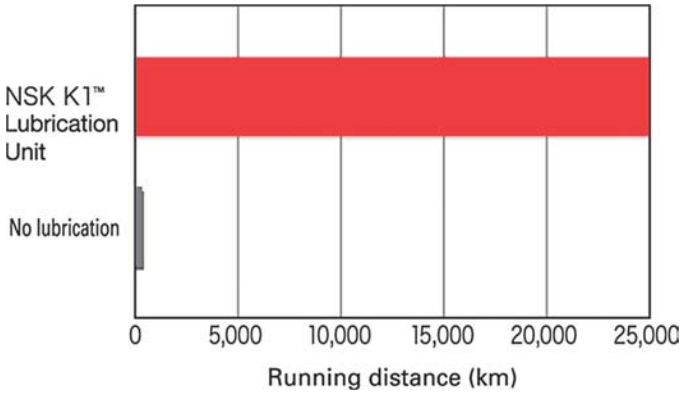

Results of High-Speed Durability Test of Linear Guides Without Lubricant

(2) High-Speed Durability Test of Ball Screws Without Lubricant

Results of high-speed durability testing of ball screw without lubrication are shown in chart to right. While the ball screw cannot be operated without a lubricant at 8.5 km without damage, the installation of the NSK K1™ Lubrication Unit permits the ball screw to run over 21,000 km without any problem.

Conditions	Test piece: BS2020 (ball screw) Shaft diameter: 20 mm Lead: 20 mm Load: none Speed: 1.3m/s (4,000 min^{-1}) Stroke: 600 mm
No lubricant	All grease removed
NSK K1™ Lubrication Unit	All grease removed + NSK K1™

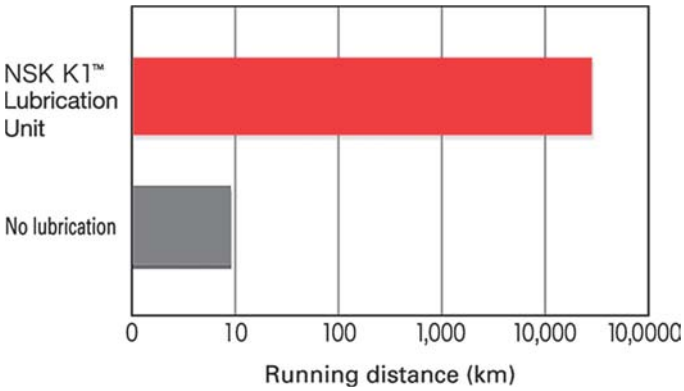

Results of High-Speed Durability Test of Ball Screws Without Lubricant

NSK K1™ Lubrication Unit for food processing is available

For safety equipment of food processing and medical care, NSK provides the Monocarrier™ equipped with special NSK K1™ Lubrication Unit that is made of compatible material under FDA regulations.

Dimensions are the same as the standard NSK K1™ Lubrication Unit and special handling care is not required.

5.5 NSK Clean Grease LG2 Specification

Features

This grease was developed by NSK to be exclusively used for linear guides and ball screws in clean rooms. Compared to the fluoride grease that is commonly used in clean rooms, LG2 has several advantages such as: higher in lubrication function, longer lubrication life, more stable torque (resistant to wear) and higher rust prevention.

In dust generation, LG2 is more than equal to fluoride grease in keeping dust volume low. Since the base oil is not a special oil but a mineral oil, LG2 can be handled in the same manner as general grease.

Applications

LG2 is lubrication grease for rolling contact machine components such as linear guides and ball screws for processing equipment for semiconductors and LCD which require a highly clean environment at normal pressures at normal temperatures. It cannot be used in a vacuum environment.

Nature

Thickener	Lithium soap base
Base oil	Mineral oil + Synthetic hydrocarbon oil
Consistency	199
Dropping point	201˚C
Volume of evaporation	1.40% (99˚C, 22hr)
Copper plate corrosion test	Satisfactory (Method B, 100˚C, 24hr)
Oil separation	0.8% (100˚C, 24hr)
Base oil kinematic viscosity	$32mm^2/s$ (40˚C)

Notes

NSK AMERICAS

Argentina
NSK Argentina SRL
Buenos Aires
54.11.4762.6556

Brazil
NSK Brasil Ltda.
Sao Paulo SP
55.11.3269.4700

Canada
NSK Canada Inc.
Mississauga ON
1.877.994.6675

Latin America
NSK Latin America Inc.
Miami FL
1.305.477.0605

Mexico
NSK Rodamientos Mexicana, S.A. de C.V.
Tlainepantla de Baz MX
52.55.3682.2900

United States
NSK Corporation
Ann Arbor MI
1.888.446.5675

Website: www.nskamericas.com
NSK Global: www.nsk.com

Every care has been taken to ensure the accuracy of the data contained in this brochure, but no liability can be accepted for any loss or damage suffered through errors or omissions.

Printed in the USA ©NSK 2016. The contents of this publication are the copyright of the publishers.